(52)

No. 04-1350
Title: KSR International Co., Petitioner
v.
Teleflex, Inc., et al.
Docketed: April 11, 2005
Lower Ct: United States Court of Appeals for the Federal Circuit
Case Nos.: (04-1152)
Decision Date: January 6, 2005
Questions Presented

Date	Proceedings and Orders
Apr 6 2005	Petition for a writ of certiorari filed. (Response due May 11, 2005)
Apr 15 2005	Order extending time to file response to petition to and including June 22, 2005.
May 12 2005	Motion for leave to file amicus brief filed by Progress & Freedom Foundation.
May 12 2005	Motion for leave to file amici brief filed by Twenty-Four Intellectual Property Law Professors.
Jun 21 2005	Brief of respondents Teleflex, Inc. and Technology Holding Co. in opposition filed.
Jun 22 2005	Motion for leave to file amici brief filed by Cisco Systems Inc., et al.
Jul 6 2005	DISTRIBUTED for Conference of September 26, 2005.
Jul 8 2005	Reply of petitioner KSR International Co. filed. (Distributed)
Oct 3 2005	The Solicitor General is invited to file a brief in this case expressing the views of the United States. The Chief Justice took no part in the consideration or decision of this case.
May 25 2006	Brief amicus curiae of United States filed.
Jun 6 2006	DISTRIBUTED for Conference of June 22, 2006.
Jun 6 2006	Supplemental brief of respondents Teleflex, Inc.and Technology Holding Co. filed. (Distributed)
Jun 8 2006	Letter of June 8, 2006, from counsel for respondents received. (Distributed)
Jun 26 2006	Motion for leave to file amicus brief filed by Progress & Freedom Foundation GRANTED.
Jun 26 2006	Motion for leave to file amicus brief filed by Twenty-Four Intellectual Property Law Professors GRANTED.
Jun 26 2006	Motion for leave to file amicus brief filed by Cisco Systems Inc., et al. GRANTED.
Jun 26 2006	Petition GRANTED.
Jul 19 2006	*Consent to the filing of amicus briefs in support of either party received from counsel for the petitioner.

Jul 20 2006	Extension of time within which to file the joint appendix and petitioner's brief on the merits to and including August 22, 2006.
Jul 20 2006	Extension of time within which to file respondent's brief on the merits to and including October 16, 2006.
Jul 31 2006	*Consent to the filing of amicus briefs in support of either party received from counsel for the respondents.
Aug 2 2006	Motion for leave to file amici brief filed by Joseph V. Colaianni, Sr. and James E. Armstrong, III.
Aug 18 2006	Brief amicus curiae of Professor Lee A. Hollaar Urging Affirming in Part and Vacating in Part filed.
Aug 21 2006	Brief amicus curiae of International Business Machines Corporation in Support of Neither Party filed.
Aug 22 2006	Brief amicus curiae of United States filed.
~~Aug 22 2006~~	Brief amici curiae of Ford Motor Company, et al. filed.
Aug 22 2006	Brief amici curiae of Intel Corporation, et al. filed.
Aug 22 2006	Brief amicus curiae of Business Software Alliance filed.
Aug 22 2006	Brief amicus curiae of Bar Association of the District of Columbia - Patent, Trademark & Copyright Section in Support of Neither Party filed.
Aug 22 2006	Brief amicus curiae of Economists and Legal Historians filed.
Aug 22 2006	Brief amici curiae of AARP, et al,. filed.
Aug 22 2006	Brief amici curiae of Time Warner Inc., IAC/Interactive Corp., and Viacom filed.
Aug 22 2006	Brief amicus curiae of Computer and Communications Industry Association filed.
Aug 22 2006	Brief amicus curiae of Intellectual Property Law Professors filed.
Aug 22 2006	Brief amicus curiae of Electronic Frontier Foundation filed.
Aug 22 2006	Brief amici curiae of Cisco Systems Inc., et al. filed.
Aug 22 2006	Brief amicus curiae of Progress & Freedom Foundation filed.
Aug 22 2006	Joint appendix filed.
Aug 22 2006	Supplemental joint appendix
Aug 22 2006	Brief of petitioner KSR International Co. filed.
Sep 1 2006	Motion for leave to file amici brief filed by Joseph V. Colaianni, Sr. and James E. Armstrong, III GRANTED.
Sep 25 2006	Brief amicus curiae of Lee Thomason filed.
Sep 29 2006	SET FOR ARGUMENT ON Tuesday, November 28, 2006.
Oct 10 2006	Motion of the Solicitor General for leave to participate in oral argument as amicus curiae and for divided argument filed.
Oct 11 2006	CIRCULATED.
Oct 11 2006	Brief amici curiae of Chemistry and Bioengineering Professors filed. (Distributed)

Oct 11 2006	Brief amicus curiae of Harold W. Milton, Jr. filed. (Distributed)
Oct 12 2006	Brief amicus curiae of Intellectual Property Owners Association filed. (Distributed)
Oct 12 2006	Brief amicus curiae of American Intellectual Property Law Association filed. (Distributed)
Oct 13 2006	Brief amicus curiae of Intellectual Property Law Association of Chicago filed. (Distributed)
Oct 16 2006	Brief amici curiae of Altitude Capital Partners, et al. filed. (Distributed)
Oct 16 2006	Brief of respondents Teleflex, Inc., et al. filed. (Distributed)
Oct 16 2006	Brief amicus curiae of Franklin Pierce Law Center Intellectual Property filed. (Distributed)
Oct 16 2006	Brief amicus curiae of Pharmaceutical Research and Manufacturers of America filed. (Distributed)
Oct 16 2006	Brief amicus curiae of American Bar Association filed.
Oct 16 2006	Brief amici curiae of Wisconsin Alumni Research Foundation, et al. filed. (Distributed)
Oct 16 2006	Brief amicus curiae of Federal Circuit Bar Association filed. (Distributed)
Oct 16 2006	Brief amici curiae of Michelin North America, Inc., et al. filed. (Distributed)
Oct 16 2006	Brief amici curiae of Tessera, Inc., Qualcomm Inc., and Amberwave Systems Corporation filed. (Distributed)
Oct 16 2006	Brief amicus curiae of Technology Properties Limited filed. (Distributed)
Oct 16 2006	Brief amicus curiae of Biotechnology Industry Organization filed. (Distributed)
Oct 16 2006	Brief amici curiae of Business and Law Professors filed. (Distributed)
Oct 16 2006	Brief amicus curiae of United Inventors Association filed. (Distributed)
Oct 16 2006	Brief amici curiae of Fallbrook Technologies, Inc., et al. filed. (Distributed)
Oct 16 2006	Brief amicus curiae of New York Intellectual Property Law Association filed. (Distributed)
Oct 16 2006	Brief amici curiae of 3M Co., et al. filed. (Distributed)
Oct 16 2006	Brief amicus curiae of Practising Patent Attorneys filed. (Distributed)
Oct 17 2006	Record received from U.S.C.A. for Federal Circuit. (1 box)
Oct 31 2006	Supplemental brief of respondents Teleflex, Inc., et al. filed. (Distributed)
Nov 13 2006	Motion of the Solicitor General for leave to participate in oral argument as amicus curiae and for divided argument GRANTED.
Nov 16 2006	Reply of petitioner KSR International Co. filed. (Distributed) *Animation Disc included.
Nov 28 2006	Argued. For petitioner: James W. Dabney, New York, N.Y.; and Thomas G. Hungar, Deputy Solicitor General, Department of Justice, Washington, D.C. (for United States, as amicus curiae.) For respondents: Thomas C. Goldstein, Washington, D.C.

(1) APR 06 2005

No. 04- 041350

IN THE

Supreme Court of the United States

KSR INTERNATIONAL CO.,

Petitioner,

against

TELEFLEX INC. and
TECHNOLOGY HOLDING CO.,

Respondents

ON PETITION FOR A WRIT OF CERTIORARI TO THE
UNITED STATES COURT OF APPEALS
FOR THE FEDERAL CIRCUIT

PETITION FOR A WRIT OF CERTIORARI

JAMES W. DABNEY
Counsel of Record
FRIED FRANK HARRIS
SHRIVER & JACOBSON LLP
1 New York Plaza
New York, New York 10004
(212) 859-8000

Attorneys for Petitioner

JOHN F. DUFFY
3614 Quesada Street, N.W.
Washington, D.C. 20015

Of Counsel

April 6, 2005

LIBRARY
U.S.N.L.

QUESTION PRESENTED

Whether the Federal Circuit has erred in holding that a claimed invention cannot be held "obvious", and thus unpatentable under 35 U.S.C. § 103(a), in the absence of some proven "'teaching, suggestion, or motivation' that would have led a person of ordinary skill in the art to combine the relevant prior art teachings in the manner claimed."

CORPORATE DISCLOSURE STATEMENT

Petitioner hereby identifies KSR Industrial Corp. as a parent corporation owning 10% or more of Petitioner's stock. No publicly held company owns 10% or more of the stock of Petitioner.

TABLE OF CONTENTS

	Page
QUESTION PRESENTED	i
CORPORATE DISCLOSURE STATEMENT	ii
TABLE OF CONTENTS	iii
TABLE OF CITED AUTHORITIES	v
TABLE OF APPENDICES	ix
OPINIONS BELOW	1
JURISDICTION	1
STATUTORY PROVISION INVOLVED	1
STATEMENT OF THE CASE	1
REASONS FOR GRANTING THE PETITION	11
I. THE FEDERAL CIRCUIT HAS DEPARTED FROM THIS COURT'S PRECEDENTS CONSTRUING § 103.	12
II. THERE IS AN ACKNOWLEDGED CIRCUIT SPLIT.	20
III. TWO NATIONAL STUDIES HAVE IDENTIFIED THE FEDERAL CIRCUIT'S PRECEDENTS ON OBVIOUSNESS AS BEING IN NEED OF REFORM.	24

Contents

Page

IV. THIS CASE IS A GOOD VEHICLE FOR RESOLVING THE QUESTION PRESENTED. 27

CONCLUSION 30

TABLE OF CITED AUTHORITES

Page

CASES

Adams v. Bellaire Stamping Co.,
141 U.S. 539 (1891) 2, 13

Allen Engineering Corp. v. Bartell Industrial, Inc.,
299 F.3d 1336 (Fed. Cir. 2002) 20, 21, 22, 30

American Seating Co. v. National Seating Co.,
586 F.2d 611 (6th Cir. 1978) 16

Anderson's-Black Rock, Inc. v. Pavement Salvage Co.,
396 U.S. 57 (1969) ..... *passim*

Ashland Oil, Inc. v. Delta Resins & Refractories, Inc.,
776 F.2d 281 (Fed. Cir. 1985) 27

C.R. Bard, Inc. v. M3 System, Inc.,
157 F.3d 1340 (Fed. Cir. 1998) 3

Carson Manufacturing Co.
v. Carsonite International Corp.,
686 F.2d 665 (9th Cir. 1981) 15

Dann v. Johnson,
425 U.S. 219 (1976) 14, 15

Deepsouth Packing Co v. Laitram Corp.,
406 U.S. 518 (1972) 16

Deere & Co. v. Hesston Corp.,
593 F.2d 956 (10th Cir. 1979) 16

Festo Corp. v. Shoketsu Kinzoku Kogyo Kabushuki Co.,
535 U.S. 722 (2002) 24

Cited Authorities

Page

Graham v. John Deere Co.,
383 U.S. 1 (1966) 2, 3, 11, 12, 13

Great Atlantic & Pac. Tea Co. v. Supermarket Equip. Corp.,
340 U.S. 147 (1950) 2

Hailes v. Van Wormer,
87 U.S. 353 (1874) 3

Hilton Davis Chemical Co. v. Warner-Jenkinson Co.,
62 F.3d 1512 (Fed. Cir. 1995) 18

Holmes Group, Inc v. Vornado Air Circulation System, Inc.,
535 U.S. 826 (2002) 9, 22, 23, 28

In re Dembiczak,
175 F.3d 994 (Fed. Cir. 1999) 3

In re Lee,
277 F.3d 1338 (Fed. Cir. 2002) 12, 18

J.E.M. Ag Supply, Inc. v. Pioneer Hi-Bred Int'l, Inc.,
534 U.S. 124 (2001) 24

John Zink Co. v. National Airoil Burner Co.,
13 F.2d 547 (5th Cir. 1980) 15, 21

Lincoln Engineering Co. v. Stewart-Warner Corp.,
303 U.S. 545 (1938) 2

Medtronic, Inc. v. Cardiac Pacemakers, Inc.,
721 F.2d at 1563 (Fed. Cir. 1984) 17

Cited Authorities

Page

Pfaff v. Wells Electronics, Inc.,
525 U.S. 25 (1998) 23, 24

Reckendorfer v. Faber,
92 U.S. 347 (1876) 3

Reinke Manufacturing Co. v. Sidney Manufacturing Corp.,
594 F.2d 644 (8th Cir. 1979) 15-16

Sakraida v. Ag Pro, Inc.,
425 U.S. 273 (1976) ..... *passim*

Scully Signal Co. v. Electronics Corp. of America,
570 F.2d 35 (1st Cir. 1977) 16

Shakelton v. J. Kaufman Iron Works, Inc.,
689 F.2d 334 (2d Cir. 1982) 15

Spectrum Sports v. McQuillan,
506 U.S. 447 (1993) 28

Stratoflex, Inc. v. Aeroquip Corp.,
713 F.2d 1530 (Fed. Cir. 1983) 17, 19-20, 21

Toledo Pressed Steel Co. v. Standard Parts, Inc.,
307 U.S. 350 (1939) 2

United States v. Adams,
383 U.S. 39 (1966) 13, 14

FEDERAL STATUTES

28 U.S.C. § 1254(1) 1

28 U.S.C. § 1295(a)(1) 1

28 U.S.C. § 1338(a) 1

Cited Authorities

	Page
35 U.S.C. § 103(a)	*passim*
35 U.S.C. § 112	17
35 U.S.C. § 271(c)	17
35 U.S.C. § 282(2)	18

MISCELLANEOUS

Martin J. Adelman, Randall R. Rader, John R. Thomas, & Harold C. Wegner, *Cases and Materials on Patent Law* 345 (2d ed. 2003) 19

John F. Duffy, *Rethinking the Prospect Theory of Patents*, 71 U. Chi. L. Rev. 439 (2004) 29

Paul Goldstein, Copyright, *Patent, Trademark and Related State Doctrines* 459 (2002) 20

Paul M. Janicke, *The Federal Circuit and Antitrust: To Be or Not to Be: The Long Gestation of the U.S. Court of Appeals for the Federal Circuit* (1887-1982), 69 Antitrust L.J. 645 (2002) 19

William M. Landis and Richard A. Posner, *The Economic Structure of Intellectual Property Law* 304 (Harvard 2003) 29

Robert P. Merges and John F. Duffy, *Patent Law and Policy* 655 (3rd ed. 2002) 29

A. Samuel Oddi, *Beyond Obviousness: Invention Protection in the Twentieth Century*, 38 Am. U. L. Rev. 1097 (1989) 19

TABLE OF APPENDICES

Page

Appendix A – Decision Of The United States Court Of Appeals For The Federal Circuit Decided January 6, 2005 ..... 1a

Appendix B – Opinion And Order Of The United States District Court For The Eastern District Of Michigan Filed December 12, 2003 ..... 18a

KSR International Co. ("KSR") hereby petitions for a writ of certiorari to review the judgment of the United States Court of Appeals for the Federal Circuit entered in this action on January 6, 2005.

OPINIONS BELOW

The opinion of the Court of Appeals is unreported and is set forth in the Appendix ("App.") at 1a-17a. The opinion and final judgment of the United States District Court for the Eastern District of Michigan is reported at 298 F. Supp. 2d 581 and appears at App. 18a-49a.

JURISDICTION

The judgment of the Court of Appeals was entered on January 6, 2005. No petition for rehearing was filed. This Court's jurisdiction is invoked under 28 U.S.C. § 1254(1).

The District Court had jurisdiction to hear Respondent's claim for alleged patent infringement under 28 U.S.C. § 1338(a). The Federal Circuit had jurisdiction to hear Respondent's appeal under 28 U.S.C. § 1295(a)(1).

STATUTORY PROVISION INVOLVED

This case concerns the standard of patentability set forth in § 103(a) of the Patent Act, 35 U.S.C. § 103(a), which provides:

> A patent may not be obtained though the invention is not identically disclosed or described as set forth in section 102 of this title, if the differences between the subject matter sought to be patented and the prior art are such that the subject matter as a whole would have been obvious at the time the invention was made to a person having ordinary skill in the art to which said subject matter pertains. Patentability shall not be negatived by the manner in which the invention was made.

STATEMENT OF THE CASE

This case raises a question of broad and general importance: What is the proper interpretation of the patentability standard set forth in § 103 of the Patent Act? The answer to this question affects every pending U.S. patent application, every issued U.S. patent, and every U.S.

federal court challenge to the validity of a patent. It is a matter of concern to every company and member of the public affected by the grant of a U.S. patent.

Section 103 was first enacted in 1952; it provides that a patent cannot issue on subject matter that would have been "obvious" to a hypothetical "person having ordinary skill in the art." This Court first interpreted § 103 in *Graham v. John Deere Co.*, 383 U.S. 1 (1966), which unanimously "conclude[d] that the section was intended merely as a codification of judicial precedents embracing the *Hotchkiss* [*v. Greenwood*, 52 U.S. 248 (1852)] condition, with congressional directions that inquiries into the obviousness of the subject matter sought to be patented are a prerequisite to patentability."[1] *Id.* at 17. Section 103 was, the Court instructed, to be followed "realistically" so as to establish a "practical test of patentability." *Id.*

In its subsequent decisions in *Anderson's-Black Rock, Inc. v. Pavement Salvage Co.*, 396 U.S. 57, 60-61 (1969) and *Sakraida v. Ag Pro, Inc.*, 425 U.S. 274, 281-82 (1976), this Court unanimously held that § 103 precludes patent protection where, as in this case, a claimed "invention" consists of "a combination which only unites old elements with no change in their respective functions." *Sakraida*, 425 U.S. at 281 (quoting *Great Atl. & Pac. Tea Co. v. Supermarket Equip. Corp.*, 340 U.S. 147, 152 (1950)). *Sakraida* and *Anderson's-Black Rock* reflected a practical judgment – grounded in more than a century of this Court's precedents[2] – that as a matter of

---

[1] As the *Graham* Court explained earlier in its opinion, *Hotchkiss v. Greenwood* is the "cornerstone" decision in which this Court first formulated "a general condition of patentability." 383 U.S. at 11.

[2] *See, e.g., Toledo Pressed Steel Co. v. Standard Parts, Inc.*, 307 U.S. 350, 356 (1939) (holding that a "mere aggregation of two old devices" is unpatentable where each part "served as separately it had done"); *Lincoln Engineering Co. v. Stewart-Warner Corp.*, 303 U.S. 545, 549 (1938) ("mere aggregation of a number of old parts or elements which, in the aggregation, perform or produce no new or different function or operation than that theretofore performed or produced by them, is not patentable invention"); *Adams v. Bellaire Stamping Co.*, 141 U.S. 539, 542 (1891) (holding the standard of patentability requires "something more than a mere aggregation of old

(Cont'd)

law, the statutory "person having ordinary skill in the art" is deemed capable of assembling or rearranging "old elements with each performing the same function it had been known to perform." *Sakraida*, 425 U.S. at 282.

The practical test of patentability developed by the precedents of this Court, codified by Congress in § 103, and reaffirmed in this Court's decisions in *Graham*, *Anderson's-Black Rock*, and *Sakraida*, has been eviscerated by the Federal Circuit during the past two decades. As exemplified by the decision below, Federal Circuit has engrafted onto § 103 a new test—referred to below as the "teaching-suggestion-motivation test" (App. at 8a)—under which a claimed "invention" cannot be held "obvious" under § 103 in the absence of some proven "'suggestion, teaching, or motivation' that would have led a person of ordinary skill in the art to combine the relevant prior art teachings in the manner claimed." App. at 6a (citing prior Federal Circuit authorities).

The Federal Circuit's "teaching-suggestion-motivation test" has been applied in hundreds of cases since 1985, including in the decision below. App. at 16a-17a. The Federal Circuit has repeatedly held that a "teaching or suggestion or motivation" to combine prior art references is an "essential evidentiary component" of any obviousness holding. *C.R. Bard, Inc. v. M3 Sys., Inc.*, 157 F.3d 1340, 1351-52 (Fed. Cir. 1998). *See also In re Dembiczak*, 175 F.3d 994, 998 (Fed. Cir. 1999). The Federal Circuit applies this "teaching-suggestion-motivation test" even where, as in this case, a patent claims nothing more than a combination of pre-existing, off-the-shelf components in which each component performs exactly the same function that it had been known and was designed to perform.

(Cont'd)

results"); *Reckendorfer v. Faber*, 92 U.S. 347, 357 (1876) (holding that a "combination, to be patentable, must produce a different force or effect, or result in the combined forces or processes, from that given by their separate parts" and must also produce "a new result"); *Hailes v. Van Wormer*, 87 U.S. 353, 368 (1874) ("bringing old devices into juxtaposition, and there allowing each to work out its own effect without the production of something novel, is not invention").

The difference between this Court's interpretation of § 103 (which at least seven (7) Circuits have abided, as described *infra*), and the Federal Circuit's interpretation of § 103, is plain: Under this Court's precedents, a combination of pre-existing elements does not constitute an "invention", and does not meet the "condition for patentability" specified in § 103(a), if each element in the claimed combination does nothing more than what it was previously known or designed to do.

In sharp contrast, the Federal Circuit holds that a combination of pre-existing elements *will always* constitute an "invention", and *will always* meet the "condition for patentability" specified in § 103, unless there is proven "some 'suggestion, teaching, or motivation' that would have led a person of ordinary skill in the art to combine the relevant prior art teachings in the manner claimed." App. at 6a.

The Federal Circuit's so-called "teaching-suggestion-motivation test" has no basis in the text of § 103 or in any decision of this Court. Indeed, it is—as numerous commentators have noted—quite inconsistent with this Court's interpretations § 103. The Federal Circuit itself has expressly acknowledged that its test splits from other circuit court precedent. The Federal Circuit's precedents on this "teaching-suggestion-motivation test" have also drawn criticism in two recent national studies, one undertaken by the Federal Trade Commission and one by the National Academies of Sciences. This issue is ripe for review by this Court, and this case provides a good vehicle to do so.

The Technology at Issue

This case involves a simple and ubiquitous technology: "gas pedals" used to operate passenger cars and light trucks. Petitioner supplies gas pedals to General Motors Corp. ("GM") for installation in various Chevrolet (e.g., Silverado, Tahoe, Suburban, Trailblazer), GMC (e.g., Sierra, Envoy, Yukon), Buick (Rainier), Cadillac (e.g., Escalade), and other GM vehicle models sold in United States commerce. Some of these gas pedals are alleged to infringe one claim in a patent owned by Respondents.

The claimed invention at issue in this case is a straightforward combination of (i) a pre-existing type of "adjustable pedal," and (ii) a pre-existing type of "electronic control" that is commonly used on newer cars. Both of these components are explained below.

Adjustable Pedals

The particular gas pedals at issue here are "adjustable" pedals, which are pedals whose resting position can be moved, or "adjusted," relative to a driver's seating position. Adjustable foot pedals permit drivers of short stature to operate a motor vehicle with the driver's seat pushed further back from the steering wheel (and air bag) than may be possible with non-adjustable pedals. Adjustable foot pedals also permit taller drivers to achieve a more comfortable driving position than may be possible with seat adjustment alone. Adjustable pedals are old in the art; they were a common technology at least twenty-five (25) years before the alleged invention at issue here.

The Transition From Cable-Actuated to Electronically-Actuated Fuel Systems

Prior to the mid-1990's, most new vehicles sold in the United States were equipped with engines whose throttles were actuated by mechanical cables. In vehicles equipped with cable-actuated throttle controls, depression of a gas pedal typically causes a cable to pull on a valve housed in a carburetor or fuel injection unit, thereby increasing the amount of fuel and air entering the engine and hence raising the engine speed.

Commencing in the mid-1990's, increasing numbers of vehicles sold in the United States were equipped with engines whose throttles were controlled electronically, by computerized systems commonly known as "electronic throttle controls" or ETC's. Electronic throttle controls can accommodate improved traction control and vehicle directional stability systems, simplified cruise controls, and on-board computer-controlled systems for improving fuel economy and reducing tailpipe emissions.

In vehicles whose engines are equipped with electronic throttle controls, the gas pedal is typically coupled to an

electronic sensor that engages the pivot point of the gas pedal. Thus, in newer cars, stepping on the gas pedal does not pull a cable; instead, the electronic sensor detects the motion of the pedal and generates an electronic signal. The electronic signal travels via wire into the engine compartment where, typically, it is input into the electronic throttle control.

The '565 Patent

Respondents are the owners of U.S. Patent No. 6,237,565 B1 entitled "Adjustable Pedal Assembly With Electronic Throttle Control" (the "'565 patent"). Only one of the '565 patent's claims is at issue in this litigation. That claim—numbered claim 4 in the patent—comprises nothing more than (i) a pre-existing "adjustable pedal assembly," combined with (ii) a pre-existing "electronic control."

The simplicity of alleged invention covered by the '565 patent is confirmed by the patent document itself. The patent states that the claimed "adjustable pedal assembly" may "be any of various adjustable pedal assemblies known in the art" (col. 2, lines 55-56). The patent further states that the claimed "electronic throttle control mechanism" may "be any of various electronic throttle control mechanisms known in the art" (*id.* at col. 3, lines 22-24).

The claimed "invention" of the '565 patent thus admittedly and literally comprises nothing more than the combination of (a) a pre-existing "adjustable pedal assembly," and (b) a pre-existing "electronic control", with the latter being "attached" to the "support" of the former.

The Proceedings Below

By its lawsuit below, Respondents sought to exclude Petitioner from supplying GM with adjustable gas pedals designed to actuate modern GM engines equipped with ETC's, no matter how dissimilar might be (a) the mechanical configuration of the accused adjustable pedal assemblies developed and supplied (and independently patented) by Petitioner,[3] and (b) the mechanical configuration of the

[3] The mechanical configuration of adjustable pedal assemblies that Petitioner supplies for mid-sized Chevrolet, Buick, and GMC vehicles is disclosed in Petitioner's own U.S. Patent No. 6,655,231.

"adjustable pedal assembly" described and claimed in the '565 patent.

The District Court Action

Respondents commenced this civil action for alleged patent infringement on November 18, 2002. Respondents accused Petitioner of making unauthorized use of the invention defined by Claim 4 of the '565 patent. Petitioner denied infringement and argued, among other things, that the Claim 4 of the '565 patent was invalid under 35 U.S.C. § 103(a).

Following the completion of discovery, Petitioner moved for summary judgment of invalidity. Petitioner contended that the subject matter recited in Claim 4 of the '565 patent was unpatentable under 35 U.S.C. § 103(a) in view of undisputed prior art, namely, (a) a 1991 patent to Asano (referred to hereinafter as the "Asano" patent, or simply "Asano") that disclosed the exact type of adjustable pedal assembly described in Claim 4 of the '565 patent, and (b) an off-the-shelf, modular electronic pedal position sensor that was designed to engage the pivot shaft of any type of gas pedal. It is undisputed that the Asano patent was never cited to, or considered by, the PTO during the prosecution of the '565 patent.

In its response to Petitioner's motion for summary judgment, Respondents made no claim that the pre-existing components comprising the alleged invention of Claim 4 of the '565 patent performed any "'new or different function' . . . within the test of validity of combination patents." *Sakraida v. Ag Pro, Inc.*, 425 U.S. 273, 282 (1976) (quoting *Anderson's-Black Rock, Inc. v. Pavement Salvage Co.*, 396 U.S. 57, 60 (1969)). Rather, Respondents contended that the undisputed prior art references cited by Petitioner were insufficient to support a legal conclusion of obviousness under § 103, in view of what Respondents candidly referred to as "the barriers that the Federal Circuit has erected to a finding of obviousness." Brief for Plaintiffs-Appellants filed March 8, 2004, at 4. In particular, Respondents relied on the purported requirement of a "motivation to combine" prior art references, as purportedly giving rise to an issue of fact

precluding summary judgment as to the invalidating effect of the prior art cited by Petitioner.

The District Court's Decision

Although Petitioner urged the District Court to follow and apply this Court's long-establish "test of validity of combination patents," *Sakraida*, 425 U.S. at 282 (quoting *Anderson's-Black Rock*, 396 U.S. at 60), the District Court elected to assess the validity of Respondents' patent claim under the Federal Circuit's "teaching-suggestion-motivation test." In a comprehensive published opinion, Chief Judge Zatkoff concluded that there was no patentable difference between the subject matter recited in Claim 4 of the '565 patent, on the one hand, and the combined teachings of the prior art on adjustable pedals and the prior art on electronic pedal position sensors, on the other. The District Court observed (298 F. Supp. 2d at 593 & 596; App. at 41a, 48a):

> It is undisputed that in the mid-1990's more cars required the use of an electronic device, such as a pedal position sensor, to communicate driver inputs to an electronically managed engine. It is also undisputed that adjustable pedal assemblies have existed in the art since the late 1970's. Clearly it was inevitable that adjustable pedal assemblies would be joined with an electronic device to work in conjunction with modern electronically controlled engines.
>
> . . . .
>
> [T]he Court finds that a hypothetical person with an undergraduate degree or an equivalent amount of industry experience who has familiarity with pedal control systems for vehicles would have found it obvious to attach a modular pedal position sensor to Asano's support member, with the pedal position sensor being responsive to the pedal assembly's pivot shaft.

The Federal Circuit's Decision

Respondents timely appealed to the Federal Circuit, complaining that "the lower court diluted beyond recognition the barriers that the Federal Circuit has erected to a finding of obviousness." Brief for Appellant at 4. Respondents argued that, as bars to patentability under § 103, the invalidating legal effect of multiple prior art references (in this case, a pre-existing adjustable pedal assembly, Asano, and an off-the-shelf pedal position sensor) purportedly could not be determined without a jury trial of whether a hypothetical "person having ordinary skill in the art" would have had a hypothetical "motivation to combine" the references cited by the District Court.

In response, Petitioner once again cited and relied on this Court's *Sakraida* and *Anderson's-Black* decisions. In the alternative, Petitioner urged affirmance even under the Federal Circuit's "teaching-suggestion-motivation test" of invalidity.

On January 6, 2005, a panel of the Federal Circuit vacated the District Court's judgment and remanded for further proceedings. The Federal Circuit declined to acknowledge the existence of, to follow, or to distinguish *Sakraida* or any other of this Court's precedents applying the "test of validity of combination patents", *Sakraida*, 495 U.S. at 282 (quoting *Anderson's-Black Rock*, 396 U.S. at 60). The Federal Circuit also elected not to publish its decision even though it was vacating a comprehensive reported decision by the District Court.[4]

Instead, citing to only its own precedents, the Federal Circuit held that the District Court "did not apply the correct teaching-suggestion-motivation test". App. at 8a. And applying the purportedly "correct" "test" to the undisputed prior art references cited by the District Court, the Federal

---

[4] The Federal Circuit's action in this case is similar to what it did in *Holmes Group, Inc v. Vornado Air Circulation Sys., Inc.*, 535 U.S. 826 (2002), where arguments challenging the Federal Circuit's jurisdiction were ignored in an unpublished decision that vacated a comprehensive reported District Court decision. The undersigned counsel of record for Petitioner here was counsel of record for the prevailing Petitioner in *Holmes*.

Circuit held that the prior art of record not only did not support the District Court's grant of summary judgment to Petitioner, but that the undisputed prior art purportedly did not make out even "a *prima facie* case of obviousness." *Id.* at 14a.

The Federal Circuit did not question the District Court's conclusion that one prior art reference on adjustable pedals (namely, Asano) disclosed "all of the structural limitations of [Respondents' patent claim] with the exception of the electronic control". App. at 9a, citing 298 F. Supp. 2d at 592. The Federal Circuit also did not question the District Court's conclusion that "[e]lectronic controls were well known in the prior art." *Id.*, citing 298 F. Supp. 2d at 592. The Federal Circuit also did not question that Claim 4 of the '565 patent claimed (a) a pre-existing adjustable pedal assembly, combined with (b) a pre-existing electronic control, with each claimed element performing exactly the same function, in combination, that it had been designed to perform individually.

Nevertheless, in the Federal Circuit's view, the undisputed prior art of record did not render the Respondents' claimed "invention" unpatentable under § 103, because Petitioner had not gone further and proved, beyond genuine dispute and by "clear and convincing evidence", that "there was a suggestion or motivation to combine the teachings of Asano with an electronic control in the particular manner claimed by claim 4 of the '565 patent." App. at 12a. The Federal Circuit accordingly remanded for determination "whether a person of ordinary skill in the art *would have been motivated*, at the time the invention was made, to attach an electronic control to the support structure of the pedal assembly disclosed by the Asano patent". *Id.* at 16a-17a (emphasis added).

As exemplified by the decision below, the Federal Circuit "teaching-suggestion-motivation test" represents both (a) a major downward departure from the substantive standard of patentability prescribed in § 103 as construed by this Court, and (b) an all but insuperable barrier to any predictable, quick, or inexpensive determination of

patentability under § 103 even where, as here, the contents of documentary prior art are completely undisputed.

As articulated and applied by the Federal Circuit, the "teaching-suggestion-motivation test" purportedly enables a patent applicant or patentee to contest the invalidating legal effect of prior art references, and to claim patent protection for the most trivial of differences between a claimed "invention" and prior art, through the simple expedient of asserting that a hypothetical "person having ordinary skill in the art" purportedly would have lacked "motivation to combine" prior art references in "the particular manner claimed" in a patent or patent application.

If such an assertion is made, then the ultimate question of patent validity under § 103 effectively ceases to be question of law, *Graham*, 383 U.S. at 17, but is made to depend, instead, on the outcome of hugely costly and unpredictable litigation over whether a hypothetical "person having ordinary skill in the art" would have had hypothetical "motivation to combine" pre-existing components for a particular application at a point in time.

The Federal Circuit construes § 103(a) as purportedly *precluding* a legal conclusion of invalidity in the absence of specific factual findings that satisfy that court's "teaching-suggestion-motivation test". In practical effect, the Federal Circuit has recast § 103 as providing, not "conditions for patentability" (as its title states), but rather "conditions for *challenges* to patentability." The result is a radically circumscribed statute and an exceptionally low standard of patentability mandated by neither Congress nor this Court.

REASONS FOR GRANTING THE PETITION

The decision below is in direct conflict with this Court's precedents, the law of at least seven (7) regional Circuits, and the text of § 103 itself. The divergence between this Court's precedents and existing Federal Circuit precedent is so blatant that commentators and casebook editors in the field of patent law routinely describe the Federal Circuit's

precedents on § 103 as "abolish[ing]," "ignor[ing]," or "dismissing" controlling Supreme Court precedent.

The Federal Circuit has itself acknowledged that there is a circuit split on this issue. Furthermore, in contrast to the "practical test of patentability" envisioned by this Court in *Graham*, the Federal Circuit has held that even the expert fact finders at the Patent and Trademark Office are forbidden from using "common sense" in applying § 103. *See In re Lee*, 277 F.3d 1338, 1345 (Fed. Cir. 2002). Two national studies on reform of the patent system have identified the § 103 precedents of the Federal Circuit as ripe for reform. Review by this Court is urgently needed in this area; this case provides a good vehicle to provide such review.

I. THE FEDERAL CIRCUIT HAS DEPARTED FROM THIS COURT'S PRECEDENTS CONSTRUING § 103.

This Court has applied the standard of patentability set forth in § 103 in six cases; in five cases of those cases, the Court held that the claimed subject matter was unpatentable under § 103. In none of those cases did this Court hold that the statute was inapplicable to a claimed invention in the absence of some proven "teaching, suggestion, or motivation" to combine or modify prior art references.

In *Graham v. John Deere Co.*, the Court invalidated a patent on a novel clamp for attaching a plough shank to the frame of the plough. This Court recognized that "all of the elements" in Graham's patent could be found in the prior art, but the arrangement of those elements in Graham's patent was somewhat different ("the position of the shank and hinge plate appears reversed" in the prior art, *see* 383 U.S. at 26). Nevertheless, this Court held that the "mere" reversal in the arrangement of two elements from the prior art "presents no operative mechanical distinctions, much less nonobvious differences." *Id.* The Court did not require, as the Federal Circuit did in the panel decision below, "specific findings showing a teaching, suggestion, or motivation to combine prior art teachings in the particular manner claimed by the patent at issue." If that standard had been applied, *Graham* would have been decided

differently because Graham's patent combined prior art elements in a particular manner (with two elements reversed in position) and the Court had no factual findings concerning any prior art teaching, suggestion, or motivation to combine the prior art element in that particular manner.

Similarly, *Calmar, Inc. v. Cook Chemical Co.* (a companion case decided with *Graham*, *see* 383 U.S. at 26), this Court held obvious, and thus invalid, a patent on a "combination of admittedly old elements," *id.* at 29. The invalidated patent covered a novel type of overcap for use with an insecticide pump sprayer (i.e., a cap for a can of bug spray). One difference between the patented combination and the prior art was that the patented cap included a "rib" seal; such seals had previously been used with caps for pour spouts but not for pump sprayers. Nevertheless, this Court held that "[t]he substitution of a rib built into a collar likewise presents no patentable difference above the prior art" because that type of seal was "fully disclosed" in an earlier patent on a pour spout. *Id.* at 35. The Court did not require any specific factual findings that the prior art included a teaching, suggestion, or motivation to combine the rib seal with existing pump sprayer caps.

United States v. Adams, 383 U.S. 39 (1966), is the third of the cases argued on the same day as *Graham*; it is the only case in which this Court has ever sustained a patent as nonobvious under the § 103 standard. As in *Graham* and *Cook Chemical*, the patent in *Adams* (which covered a new type of battery) consisted of a novel combination of pre-existing elements from the prior art. In sustaining Adams' patent, however, this Court did not merely note that the prior art failed to include a suggestion to combine the relevant elements in the particular manner claimed by Adams. Rather, this Court considered many factors, including (i) that the operating characteristics of Adams' battery were "wholly unexpected[]" and had "certain valuable operating advantages over other batteries," *id.* at 51; (ii) that the particular type of battery Adams had sought to invent was considered "not practical" prior to his

discovery, *id.* at 52; and (iii) that "noted experts expressed disbelief" that the Adams battery could possibly work, *id.*

In *Anderson's-Black Rock, Inc. v. Pavement Salvage Co.*, 396 U.S. 57 (1969), the alleged invention was a machine for paving a road with blacktop; it was merely a combination of "four elements known in the prior art [mounted] on one chassis." *Id.* at 59. Again, this Court required no "specific findings" that the prior art contained some teaching, suggestion, or motivation for combining the elements in the particular manner claimed in the patent. Rather, this Court reaffirmed its longstanding doctrine that, where a patent covers merely a combination of old elements, the patent will not be valid unless the combination produces "a new or different function" or demonstrates a "synergistic result," which the Court defined "an effect greater than the sum of the several effects taken separately." *Id.* at 60-61. The Court identified this requirement as the "the test of validity of combination patents." *Id.* at 60.

Dann v. Johnson, 425 U.S. 219, 222 (1976), concerned a patent application on a computerized system for "provid[ing] bank customers with an individualized and categorized breakdown of their transactions during the period in question." The PTO rejected the application on several grounds, including that the alleged invention was obvious. The Court of Customs and Patent Appeals (CCPA)—a predecessor court of the Federal Circuit—reversed and held that the invention was not obvious. This Court granted certiorari and reversed the CCPA. In holding the alleged invention obvious under § 103, this Court cautioned that "it is important to remember that the criterion is measured not in terms of what would be obvious to a layman, but rather what would be obvious to one 'reasonably skilled in [the applicable] art.'" *Id.* at 229. The Court frankly acknowledged that "[t]here may be differences between respondent's invention and the state of the prior art." *Id.* Nonetheless, the Court—without demanding any "specific findings" of the sort now routinely demanded by the Federal Circuit—held that "[t]he gap between the prior art and respondent's system is simply

not so great as to render the system nonobvious to one reasonably skilled in the art." *Id.* at 230.

Finally, in *Sakraida v. Ag Pro, Inc.*, 425 U.S. 273, 274 (1976), the Court invalidated a patent covering a novel "water flush system to remove cow manure from the floor of a dairy barn." As this Court noted, the idea of using water to flush animal stalls dates back ancient times. *See id.* at 275 n.1 (citing the Hercules' fifth labor—cleaning the Augean stables). Because all of the relevant elements of the patented combination existed in the prior art, *see id.* at 275, this Court applied "the test of validity of combination patents" that had been applied in *Anderson's-Black Rock, id.*, at 282. The Court rejected the argument that "the combination of these old elements to produce an abrupt release of water directly on the barn floor from storage tanks or pools can properly be characterized as synergistic." *Id.* "Rather," the Court held, "this patent simply arranges old elements with each performing the same function it had been known to perform," and "[s]uch combinations are not patentable under standards appropriate for a combination patent." *Id.*

Prior to the creation of the Federal Circuit in 1982, at least seven (7) of the regional Courts of Appeals had cited and followed *Sakraida, Anderson's-Black Rock,* and their many predecessor cases, when analyzing the validity of combination patent claims such as the patent claim at issue in this case.[5] These Courts of Appeals were following the wisdom set forth in this Court's opinion in *Sakraida*:

---

[5] *E.g., Shakelton v. J. Kaufman Iron Works, Inc.*, 689 F.2d 334, 339 (2d Cir. 1982) (citing *Sakraida* for the propositions that "[t]he starting point for a court's judgment on the obviousness of a combination patent is to examine the function of the components in their prior context alongside the functions they perform in their new combination" and that "[a] change of function for a well known element of a combination patent is a benchmark of nonobviousness"); *Carson Mfg. Co. v. Carsonite Int'l Corp.*, 686 F.2d 665 (9th Cir. 1981) ("A combination patent will be upheld only if it produces an 'unusual' or 'surprising' result"); *John Zink Co. v. National Airoil Burner Co.*, 613 F.2d 547, 551 (5th Cir. 1980) ("The combined elements must perform a new or different function, produce 'unusual or surprising consequences,' or cause a synergistic result"); *Reinke Mfg. Co. v. Sidney Mfg. Corp.*, 594 F.2d

(Cont'd)

> Courts should scrutinize combination patent claims with a care proportioned to the difficulty and improbability of finding invention in an assembly of old elements. . . . A patent for a combination which only unites old elements with no change in their respective functions . . . obviously withdraws what already is known into the field of its monopoly and diminishes the resources available to skillful men.

Sakraida, 425 U.S. at 281.

The Federal Circuit, however, has simply refused to accept or abide "[t]he prevailing law in this and other courts as to what is necessary to show a patentable invention when a combination of old element is claimed," *Deepsouth Packing Co. v. Laitram Corp.*, 406 U.S. 518, 530 (1972), notwithstanding that this law "was clearly evident from the cases when the [1952 Patent] Act was passed." *Id.*

Less than a year into its history, in 1983, the Federal Circuit boldly repudiated the "test of validity of combination patents" that this Court had applied in *Sakraida* and *Anderson's-Black Rock*, and numerous prior cases over a 100+ year period, on the basis that there purportedly was "no warrant" for this Court's case law treatment of combination patents and the very concept of a "combination patent" was purportedly "meaningless":

> There is no warrant for judicial classification of patents, whether into 'combination' patents and

---

(Cont'd)

644, 648 (8th Cir. 1979) ("if the claims cover a structure that combines old and well known elements, one of the factors this court must look for in determining whether the patents meet section 103 requirements is synergism: that which results in an effect great than the sum of the several effects taken separately"); *Deere & Co. v. Hesston Corp.*, 593 F.2d 956, 962 (10th Cir. 1979) ("in order for the combination of old elements to prevail, there must be a synergistic effect"); *American Seating Co. v. National Seating Co.*, 586 F.2d 611, 620 (6th Cir. 1978) ("the combination, in order to be patentable, must produce a synergistic effect or result"); *Scully Signal Co. v. Electronics Corp. of Am.*, 570 F.2d 35, 360 n.5 (1st Cir. 1977) ("a combination patent must achieve an effect greater than the sum of the several effects taken separately").

> some other unnamed and undefined class or otherwise. Nor is there warrant for different treatment or consideration of patents based on a judicially devised label. Reference to 'combination' patents is, moreover, meaningless.

Stratoflex, Inc. v. Aeroquip Corp., 713 F.2d 1530, 1566 (Fed. Cir. 1983). *See also Medtronic, Inc. v. Cardiac Pacemakers, Inc.*, 721 F.2d at 1563, 1566 (Fed. Cir. 1984) ("It but obfuscates the law to posit a non-statutory, judge-created classification labeled 'combination patents'").[6]

Having thus peremptorily rejected this Court's entire body of case law on combination patents (exemplified by the Federal Circuit's failure in this case to cite or distinguish *Sakraida, Anderson's-Black Rock*, or other of this Court's cited by Petitioner below), the Federal Circuit then proceeded, in the mid-1980's, to fashion a new and radical re-interpretation of § 103(a), one that purported to recast that statute as limiting only *challenges* to patent claims, as distinct from limiting what can be claimed as a patentable "invention" in the first instance.

Under the Federal Circuit's re-interpretation of § 103(a), an article of manufacture described in a patent application—no matter what its nature—is automatically presupposed to constitute an "invention" that can be patented. Far from limiting what an applicant can claim as an "invention", the Federal Circuit construes § 103(a) as imposing significant hurdles that an accused infringer challenging a patent, or an Examiner passing on a patent application, must clear before any patent claim, whether in an application or in an issued patent, can be held obvious.

In particular, the Federal Circuit holds that "prior art" cannot render claimed subject matter unpatentable under 35 U.S.C. § 103(a) unless a challenger proves with

---

[6] Contrary to the Federal Circuit's suggestion, the Patent Act of 1952, 35 U.S.C. §§ 101-376, expressly acknowledges the existence of "combination" patents as a distinct category of patents. *E.g.*, 35 U.S.C. § 112 ("An element in a claim for a combination may be expressed. . . ."); 35 U.S.C. § 271(c) ("Whoever offers . . . a component of a patented . . . combination. . . .").

"evidence" – and the PTO or a court makes "specific findings" – demonstrating the existence of "some 'suggestion, teaching, or motivation' that would have led a person of ordinary skill in the art to combine the relevant prior art teachings in the particular manner claimed". App. at 8a.

Under this standard, a patent application claiming nothing more than an aggregation of pre-existing elements *must* be held to meet the patentability standard of § 103 unless the PTO can meet the difficult factual burden imposed on it by the Federal Circuit. Moreover, in meeting that burden, the PTO must produce detailed evidence and it is forbidden to rely on "common sense." *In re Lee*, 277 F.3d 1338 (Fed. Cir. 2002).

Once a patent has issued, the Federal Circuit construes 35 U.S.C. §§ 103(a) and 282(2) as precluding a challenge to validity of a patent claim in the absence of proof by "clear and convincing evidence" that a hypothetical person having ordinary skill in the art would have had a hypothetical "motivation to combine the prior art teachings in the particular manner claimed". App. at 8a. The Federal Circuit imposes this "clear and convincing evidence" burden of proof even where, as here, a challenger relies on documentary prior art that was never considered by the PTO during the prosecution of a patent, and the question is what legal consequences flow from undisputed prior art.

The advent of the Federal Circuit's "teaching-suggestion-motivation test" has meant, among other things, the death of this Court's holdings in *Anderson's-Black Rock* and *Sakraida*. Since 1985 (when the "teaching-suggestion-motivation test" emerged in the Federal Circuit), no Federal Circuit judge has cited *Anderson's-Black Rock*. *Sakraida* has been cited only twice, with the most recent citation coming ten years ago in a dissent, and then the citation was only for the uncontroversial point that obviousness is a question of law. *See Hilton Davis Chem. Co. v. Warner-Jenkinson Co.*, 62 F.3d 1512 (Fed. Cir. 1995) (Nies, J., dissenting).

Numerous commentators and casebook authors have noted the divergence between the Federal Circuit's

precedents and this Court's decisions in *Sakraida* and *Anderson's-Black Rock*. As one of the leading patent law casebooks candidly puts it, "[i]n its early decisions, the Federal Circuit essentially repudiated the holdings of *Anderson's-Black Rock* and *Sakraida*." Martin J. Adelman, Randall R. Rader, John R. Thomas, & Harold C. Wegner, *Cases and Materials on Patent Law* 345 (2d ed. 2003). Remarkably, this casebook is co-authored by Judge Randall Rader who currently sits on the Federal Circuit.

Many other commentators have noted the divergence between Federal Circuit and this Court's precedents on the construction of 35 U.S.C. § 103(a). They have viewed the Federal Circuit's action as "abolish[ing]," "ignor[ing]," or "dismissing" Supreme Court precedent, as exemplified by the quotations below:

> "The impact of *Anderson's-Black Rock* and *Sakraida*, however, has not been significant. The Court of Appeals for the Federal Circuit, which exercises exclusive jurisdiction over patent appeals, essentially has ignored these decisions. . . ." A. Samuel Oddi, *Beyond Obviousness: Invention Protection in the Twentieth Century*, 38 Am. U. L. Rev. 1097, 1123 (1989).
>
> "[T]he Federal Circuit has neatly abolished such Supreme Court pronouncements [on obviousness] as . . . [listing the "synergism" test from *Sakraida*, among others]. . . . The end result is that the Federal Circuit has expressly dismantled many of the mechanisms the Supreme Court relied upon when deciding obviousness questions." Paul M. Janicke, *The Federal Circuit and Antitrust: To Be or Not to Be: The Long Gestation of the U.S. Court of Appeals for the Federal Circuit (1887-1982)*, 69 Antitrust L.J. 645, 661-62 (2002).
>
> "In rejecting 'synergism' as a requirement of invention, and the notion of a separate category of for 'combination patents,' the *Stratoflex* court [*Stratoflex, Inc. v. Aeroquip Corp.*, 713 F.2d 1530

> (Fed. Cir. 1983)] confronted substantial Supreme Court authority. The Court had historically held mechanical inventions that combined old elements—'combination' patents—to a more stringent standard than other inventions." Paul Goldstein, *Copyright, Patent, Trademark and Related State Doctrines* 459 (2002).
>
> "The Federal Circuit simply ignored without comment these intervening opinions [in *Anderson's-Black Rock* and *Sakraida*]. . . ." Roger E. Schechter and John R. Thomas, *Intellectual Property: The Law of Copyrights, Patents and Trademarks* § 17.3.2.1, at 380 (2003).
>
> "Completely dismissing the Supreme Court's 'synergistic results' rule, the Federal Circuit requires that for a combination invention to be obvious, the suggestion or motivation to make the specific combination must be found in the prior art." Phillipe Ducor, *Recombinant Products and Obviousness: A Typology*, 13 Santa Clara Computer & High Tech. L. J. 1, 58 (1997).

Although the divergence between this Court's § 103 precedents and the Federal Circuit's can best be seem by comparing the Federal Circuit's precedents on combination patents with *Sakraida* and *Anderson's-Black Rock*, the tension runs deeper. As Professor Robert Merges has noted, "implicit in the Supreme Court's Graham v. John Deere analysis is a 'rejection of some of the more extreme Federal Circuit cases on the so-called suggestion test.'" FTC Report, Chap. 4, at 12 n.72 (quoting testimony of Professor Robert P. Merges). The basic point here is that this Court held invalid the patent in *Graham* without the sort of detailed evidentiary showing that the Federal Circuit now requires as a matter of course before any modification of the prior art can be deemed unpatentable under § 103.

II. THERE IS AN ACKNOWLEDGED CIRCUIT SPLIT.

In *Allen Engineering Corp. v. Bartell Indus., Inc.*, 299 F.3d 1336 (Fed. Cir. 2002), the Federal Circuit acknowledged that its "teaching-suggestion-motivation test" conflicts with the

precedents of at least one other Circuit. In that case, the party challenging patent validity relied on precedents from the Fifth Circuit, which is one of the many circuits that have interpreted this Court's decisions in *Anderson's-Black Rock* and *Sakraida* as requiring a combination of old elements to "produce 'unusual or surprising consequences,' or cause a synergistic result" in order for the combination to be patentable. *John Zink Co. v. National Airoil Burner Co.*, 613 F.2d 547, 551 (5th Cir. 1980). The *Allen Engineering* Court stated that the "Fifth Circuit 'synergism' test for the patentability of combination inventions [is] a test which was specifically abrogated in this Circuit by *Stratoflex, Inc. v. Aeroquip Corp.*, 713 F.2d 1530, 1540 (Fed. Cir. 1983)."

The Fifth Circuit's "synergism" test was, of course, drawn directly from the language this Court used in *Anderson's-Black Rock* and *Sakraida*. *See* 425 U.S. at 282. Unsurprisingly then, the Fifth Circuit is not the only Circuit to adhere to the *Sakraida* "synergism" test for determining the validity of combination patents. As previously noted (see note 5, *supra*), at least seven of the regional circuits have followed this test.

The split here is not just a matter of semantics. As discussed above, the decisions of this Court preclude patent protection for combinations of pre-existing elements, unless the combination exhibits something more than each old element "performing the same function it had been known to perform." *Sakraida*, 425 U.S. at 282. The regional Circuits that require synergistic effects are following that doctrine.

Under the Federal Circuit's "teaching-suggestion motivation test", by contrast, showing that each element in a claimed combination performs "the same function it had been known to perform," *id.*, is not enough to establish a legal conclusion of unpatentability under § 103 – as this case well-illustrates. Rather, the Federal Circuit makes patentability depend on the outcome of costly and unpredictable litigation over the existence or non-existence of some "teaching, suggestion, or motivation" to combine pre-existing elements, regardless of whether the combination yields any new or different function or effect.

Proof that this circuit split matters is found in the *Allen Engineering* opinion itself, where the Federal Circuit went out of its way to chastise the litigants for even raising the synergism test.

The decisions of the circuits adhering to the "synergism" test arose out of appeals filed before most patent appeals were consolidated in the Federal Circuit. Nonetheless, there are good reasons for giving significant weight to this acknowledged circuit split.

First, under *Holmes Group, Inc. v. Vornado Air Circulation Sys., Inc.*, 535 U.S. 826 (2002), the Federal Circuit does not have exclusive jurisdiction of all cases presenting patent validity issues. Rather, as the Court held in *Holmes*, regional Circuits continue to have jurisdiction over cases (e.g., antitrust, contract, unfair competition cases) in which patent claims and issues are raised only in a defendant's counterclaim.

The implications of *Holmes* have been noted in academic commentary in the field. As one commentator described it, Federal Circuit precedents are likely to provoke circuit conflicts because the regional circuits "may" decide that they are bound by Supreme Court precedents rather than those of the Federal Circuit:

> "[T]he Federal Circuit for many years has flatly rejected the rule that a combination patent must reflect 'synergism' to be valid when faced with an obviousness challenge, so the Supreme Court has never needed to overrule its older pronouncements regarding the synergism requirement. Nevertheless, a regional circuit exercising jurisdiction over a counterclaim for patent validity may decide that it is bound to follow those pronouncements, because, of course, only the Supreme Court is empowered to overrule its prior precedents." Elizabeth I. Rogers, *The Phoenix Precedents: The Unexpected Rebirth of Regional Circuit Jurisdiction Over Patent Appeals and the Need for a Considered Congressional Response*, 16 Harv. J. Law & Tech. 411 (2003).

Second, in his concurring opinion in *Holmes*, Justice Stevens stated that one benefit of some decentralization in patent appeals is that circuit splits could be helpful to this Court in identifying cases for granting certiorari:

> "Necessarily, therefore, other circuits will have some role to play in the development of this area of the law. An occasional conflict in decisions may be useful in identifying questions that merit this Court's attention. Moreover, occasional decisions by courts with broader jurisdiction will provide an antidote to the risk that the specialized court may develop an institutional bias."

535 U.S. at 839. This concurrence suggests that the Court will continue to use circuit splits to help decide which patent cases to review. Prior practice suggests that this Court does continue to use circuit splits in this way. For example, in *Pfaff v. Wells Electronics, Inc.*, 525 U.S. 25 (1998), the petitioner argued, as one reason for granting certiorari, that the Federal Circuit had diverged from the approach taken by regional circuits prior to the creation of the Federal Circuit. *See* Petition for a Writ of Certiorari in *Pfaff v. Wells Electronics, Inc.*, 1998 WL 34081020, at *9-10 & n.10. This Court granted certiorari and, in its opinion, specifically noted the circuit split as one factor justifying the court's grant of certiorari. *See* 525 U.S. at 60.

Finally, the circuit split is only one of several factors that make this case fit comfortably within the category of patent cases in which this Court has recently granted review. Since 1995, this Court has reviewed patent cases at a rate of roughly one case per Term. *See* John F. Duffy, *The* Festo *Case and the Return of the Supreme Court to the Bar of Patents*, 2002 S. Ct. Rev. 273, 297-98 (2003) (collecting data).[7] Review of these cases suggest that this Court has been willing to "assert some degree of supervision over the Federal

[7] This article charts the five year average of this Court's rate of review in patent cases from the 1950 through 2001 Terms. If the chart were extended to the 2004 Term, the current rate of review in patent cases would .8 per term (averaged over five years) or .9 per term (averaged over ten years).

Circuit—even on statutory issues of patent policy", and even where review is not necessary "to maintain the uniform application of federal law" or "to resolve a conflict between the Federal Circuit and the legal position of the Executive Branch." *Id.* at 298-99.

In this case, of course, a circuit split does exist, as in *Pfaff*. There is also a serious claim that lower court precedents have "strayed beyond the parameters of the Court's patent jurisprudence," *id.* at 340, as there was in *Festo Corp. v. Shoketsu Kinzoku Kogyo Kabushuki Co.*, 535 U.S. 722 (2002). And, as in *J.E.M. Ag Supply, Inc. v. Pioneer Hi-Bred Int'l, Inc.*, 534 U.S. 124 (2001), the issue here involves a fundamental legal principle that controls the scope of the patent system. The need for certiorari is at least as great in this case as it was in those prior cases; indeed, the need here is greater because the issue in each of those prior cases affected only a subset of patents, while the issue here is relevant to all patents.

III. TWO NATIONAL STUDIES HAVE IDENTIFIED THE FEDERAL CIRCUIT'S PRECEDENTS ON OBVIOUSNESS AS BEING IN NEED OF REFORM.

The Federal Circuit's interpretation of § 103 is now the subject of increasing criticism in government, industry, and the academy. Within the past two years, national institutions have completed two comprehensive studies of the patent system. Both studies recommended a small number of specific reforms; both identified the obviousness doctrine as an area in need of reform. These studies provide additional confirmation of the importance of this issue.

In October 2003, the Federal Trade Commission (FTC) released a comprehensive study of the U.S. patent system. See Federal Trade Commission, *To Promote Innovation: The Proper Balance of Competition and Patent Law and Policy* (Oct. 2003) ("FTC Report"). The FTC is one of the nation's chief enforcers of federal competition policy, and the FTC Report has its genesis in a series of hearings, undertaken jointly by the FTC and the U.S. Department of Justice, with the goal of "understand[ing] better the current relationship between competition and patent law and policy." FTC

Report, Executive Summary at 2. The FTC study further confirms the importance and ripeness of this Court's review of that controversial Federal Circuit-created "test".

The FTC recognized "the Federal Circuit's 'suggestion test' as a core issue in assessing nonobviousness and a focal point of current debate." FTC Report, Chap. 4, at 11. One key issue stressed in the FTC Report is a matter well presented in this case—the demanding standard of proof that the Federal Circuit applies to lower level fact finders. As the PTO's Deputy Commissioner for Examination Policy describes it, the Federal Circuit is "insisting that the PTO . . . 'connect the dots . . . very, very clearly.'" *Id.*

It is on this very point that the FTC recommended that the nonobviousness standard be reformed: "The Commission urges that in assessing obviousness, the analysis should ascribe to the person having ordinary skill in the art an ability to combine or modify prior art references that is consistent with the creativity and problem solving skills that in fact are characteristic of those having ordinary skill in the art." *Id.* at 15. This recommendation is consistent with the "practical test of patentability" mandated by this Court in *Graham*, but it is not the way that the Federal Circuit is applying § 103.

When the Report was issued, the Commission had hoped that the Federal Circuit might have been "mov[ing] away" from its previous "rigid application of the suggestion test." *Id.* at 14. But it was able to cite only "one very recent case" to support this optimistic view. Cases such this case—where the Federal Circuit overturned in an unpublished opinion the thoughtful and thorough opinion of a District Court with a demand that the lower court make more "specific findings" concerning suggestions in the prior art—demonstrate that the FTC was overly optimistic in expecting the Federal Circuit to reform its own jurisprudence. Rather, the Federal Circuit has continued to persist in "rigidly applying" its precedents to the point of "assum[ing] away . . . typical levels of creativity and insight" ordinarily found in the art. *Id.* As the FTC noted, such a test "supports

findings of nonobviousness even when only a modicum of additional insight is needed." *Id.*

In 2004, the National Research Council of the National Academies of Science and Engineering released a report calling for various reforms of the current patent system. *See* National Research Council, *A Patent System for the 21st Century* (2004) (available at http://www.nap.edu/html/patentsystem/0309089107.pdf). The report was produced by a committee of distinguished lawyers, economists, legal academics and corporate executives. The President of Yale University served as the Chair of the committee, and the report was funded by a broad cross-section of government agencies, foundations, and private corporations.[8] This distinguished committee "support[ed] seven steps to ensure the vitality and improve the functioning of the patent system." *Id.* at 5 (executive summary). The second recommendation was to "Reinvigorate the Non-Obviousness Standard." *Id.* at 6 (executive summary).

As detailed in that National Academies' Report, there is good reason for "concern[]" that recent court decisions have led to "some dilution of the non-obviousness standard." *Id.* at 59. The Report notes that "a number of legal scholars view the evolution of the law over the last generation as reducing the size of the step required for patentability under the non-obviousness standard and as allowing the issuance of patents on obvious inventions." *Id.* at 60 (citing the work over six scholars). The Report concludes that "there are reasons to be concerned about both the courts' interpretations of the substantive patent standards, particularly non-obviousness, and the USPTO's application of the standards in examination." *Id.*

The Report focused significant attention on the application of the nonobviousness standard to business method patents. In studying that area, the committee recognized one of the most important problems with the

[8] The study was funded by the National Aeronautics and Space Administration, the U.S. Department of Commerce, the Andrew W. Mellon Foundation, the Center for the Public Domain, Pharmacia Corporation, Merck & Company, Procter & Gamble, and IBM.

Federal Circuit's insistence on evidentiary proof that the prior art contains a "teaching, suggestion or motivation" demonstrating that certain combinations are obvious: "[C]reative people generally speaking strive to publish *non*-obvious information. So if it is obvious to those of skill in the art to combine references, it is unlikely that they will publish such information." *Id.* at 90. Though the Report singled out business method patents as one area where the excessively lax nonobviousness doctrine was having particularly bad consequences, the Report recognized that the problem with nonobviousness doctrine was likely to be more general. Indeed, the Report noted that some of the "apparently obvious patents" it had examined from outside the business method field "may have been approved not carelessly but under the prevailing rule that references should not be combined for the purpose of proving non-obviousness unless the examiner can point to a specific piece of prior art that says the references should be combined." *Id.*

IV. THIS CASE IS A GOOD VEHICLE FOR RESOLVING THE QUESTION PRESENTED.

For a variety of reasons, this case presents a good opportunity for the Court to review the Federal Circuit's "teaching-suggestion-motivation test." First, there is no reason to wait for further percolation of the Circuit split. The Federal Circuit's "test" is now at least two decades old, *see Ashland Oil, Inc. v. Delta Resins & Refractories, Inc.*, 776 F.2d 281, 297 (Fed. Cir. 1985) (reversing a district court's conclusion of obviousness because the court did not make findings to show that the prior art included "any factual teachings, suggestions or incentives . . . that showed the propriety of [patented] combination"), and the Federal Circuit has itself acknowledged the split between its precedents and those of at least one other circuit.

The "teaching-suggestion-motivation test" is so settled in the Federal Circuit that the court below did not even publish its decision vacating the District Court's judgment in this case. However, the decision not to publish should, if anything, be viewed as a reason to grant rather than to deny

certiorari, because non-publication confirms that the Federal Circuit precedents in this area are no longer in a formative and uncertain stage. In past cases, this Court has not hesitated to grant certiorari in cases with unpublished appellate opinions that have applied settled circuit law in conflict with the law of other circuits, *see, e.g., Spectrum Sports v. McQuillan*, 506 U.S. 447 (1993) (reviewing an unpublished court of appeals decision applying settled circuit law that was in conflict with the law of other circuits), or that have decided important issues of federal law, *see, e.g., Holmes Group, Inc. v. Vornado Air Circulation Sys., Inc.*, 535 U.S. 826 (2002) (reversing an unpublished opinion applying settled Federal Circuit law).

Second, the District Court issued a detailed published opinion holding that Claim 4 of the '565 patent was invalid under § 103 in view of undisputed prior art. 298 F. Supp. 2d 581; App. at 18a-49a. The District Court's opinion demonstrates that the challenge to this patent claim's validity is substantial.

Third, this case has a good factual setting for deciding these issues. Respondents' appeal involved one claim in one patent. The '565 patent involves familiar technology (gas pedals in automobiles) that can be readily understood. The subject matter of the action involves goods of importance to the nation (high volume GM vehicles). And there is no question but that the '565 patent is a "combination patent" within the meaning of this Court's precedents which the Federal Circuit has repudiated.

Fourth, the facts of this case well illustrate how, in practice, the Federal Circuit's "teaching-suggestion-motivation test" both (a) severely weakens § 103 as a substantive limitation on what can be claimed as a purported "invention", and (b) virtually precludes summary adjudication of whether claimed subject matter satisfies the § 103 condition for patentability in a given case, or not. The Federal Circuit "test" ignores that exogenous changes – i.e., economic, regulatory or technological changes not attributable to the work of the alleged inventor – can create new possibilities that can be exploited, or new

needs that can be satisfied, with technological trivial combinations of existing technology. *See, e.g.*, Robert P. Merges and John F. Duffy, *Patent Law and Policy* 655 (3rd ed. 2002) (noting that "[e]xogenous economic forces, rather than technical achievement," may explain the emergence of a new combination that may be quite valuable in the market even though technically trivial); William M. Landis and Richard A. Posner, *The Economic Structure of Intellectual Property Law* 304 (Harvard 2003) (explaining that "sometimes an idea is unknown not because it would be costly to discover but because it has no value" and that "[i]f an exogenous shock gives it value, it will be discovered more or less simultaneously by a number of those who can exploit it"); John F. Duffy, *Rethinking the Prospect Theory of Patents*, 71 U. Chi. L. Rev. 439 (2004) (noting that an unexpected development like the rise of internet commerce in the mid-1990's can create many opportunities for "new but obvious ideas that have suddenly come to have evident economic value" and that, if the nonobviousness requirement is not well enforced, society could face a flood of patents which will exact a heavy price for obvious ideas).

So here, an exogenous development – a switch by automobile manufacturers to electronic throttle controls in the mid-1990's – created a need to combine pre-existing accelerator pedals with a pre-existing pedal position sensors, with each component doing what it was designed to do. This Court's precedents, and the precedents of at least seven (7) regional Circuits (see note 6 *supra*), clearly preclude patent protection for such technically trivial combinations. But under the Federal Circuit "teaching-suggestion-motivation test", truly obvious responses to exogenous developments can very easily be characterized as "inventions", for the "prior art" may not anticipate the exogenous development in question or specific details of obvious responses to it.

Finally, throughout this litigation Petitioner has cited and relied on this Court's *Sakraida* and *Anderson's-Black Rock* decisions and the "test of validity of combination patents" that those and prior Supreme Court cases have applied. This

case therefore provides this Court with a clear opportunity to review these important issues without concern that new issues are being raised for the first time in a petition for certiorari. Such opportunities are likely to be increasingly rare because the Federal Circuit has expressed its displeasure with counsel who cite precedents that conflict with the Federal Circuit's re-interpretation of § 103(a).

For example, in *Allen Engineering*, the Federal Circuit upbraided counsel for even citing a Fifth Circuit case that followed this Court's *Sakraida* decision. Citing such authority was, according to the Federal Circuit, an example of "obfuscation, deflection and mischaracterization," 299 F.3d at 1357, and demonstrated that counsel "have sought to cloud rather than clarify the central legal issues and to draw the court's attention to peripheral matters." *Id.* at 1356. Since the Federal Circuit has exclusive appellate jurisdiction over the vast majority of patent appeals, such rebukes are likely to be effective in deterring counsel from preserving their legitimate challenges to the existing Federal Circuit precedents in this area.

CONCLUSION

For the reasons stated, the petition for a writ of certiorari should be granted.

Respectfully submitted,

JAMES W. DABNEY
Counsel of Record
FRIED FRANK HARRIS
SHRIVER & JACOBSON LLP
1 New York Plaza
New York, New York 10004
(212) 859-8000

Attorneys for Petitioner

JOHN F. DUFFY
3614 Quesada Street, N.W.
Washington, D.C. 20015

Of Counsel

APPENDIX

APPENDIX A — DECISION OF THE UNITED STATES COURT OF APPEALS FOR THE FEDERAL CIRCUIT DECIDED JANUARY 6, 2005

UNITED STATES COURT OF APPEALS FOR THE FEDERAL CIRCUIT

04-1152

TELEFLEX, INCORPORATED and
TECHNOLOGY HOLDING COMPANY,

Plaintiffs-Appellants,

v.

KSR INTERNATIONAL CO.,

Defendant-Appellee.

DECIDED: January 6, 2005

Before MAYER,* SCHALL, and PROST, *Circuit Judges*.

SCHALL, *Circuit Judge*.

DECISION

Teleflex Incorporated and Technology Holding Company (collectively, Teleflex") sued KSR International Co. ("KSR") in the United States District Court for the Eastern District of

* Judge Haldane Robert Mayer vacated the position of Chief Judge on December 24, 2004.

Michigan for infringement of U.S. Patent No. 6,237,565 B1 ("the '565 patent"). On December 12, 2003, the district court granted summary judgment in favor of KSR, after determining that claim 4 of the '565 patent, the sole claim at issue, was invalid by reason of obviousness. *Teleflex Inc. v. KSR Int'l Co.*, 298 F. Supp. 2d 581 (E.D. Mich. 2003). Teleflex now appeals the district court's decision. For the reasons set forth below, we *vacate* the grant of summary judgment and *remand* the case to the district court for further proceedings.

DISCUSSION

I.

Claim 4 of the '565 patent relates to an adjustable pedal assembly[1] for use with automobiles having engines that are controlled electronically with a device known as an electronic throttle control. As such, the assembly of claim 4 incorporates an electronic pedal position sensor (referred to in claim 4, and throughout this opinion, as an "electronic control"). The electronic control is responsive to the pedal pivot and thereby generates an electrical signal corresponding to the relative position of the gas pedal between the rest and applied positions. Claim 4 specifically provides for an assembly wherein the electronic control is mounted to the support bracket of the assembly. This configuration avoids movement

1. An adjustable pedal assembly (e.g., gas, break, or clutch) allows the location of the pedal to be adjusted to accommodate a particular driver's height.

Appendix A

of the electronic control during adjustment of the pedal's position on the assembly. Claim 4 reads:

> A vehicle control pedal apparatus (12) comprising:
>
> a support (18) adapted to be mounted to a vehicle structure (20);
>
> an adjustable pedal assembly (22) having a pedal arm (14) moveable in force [sic] and aft directions with respect to said support (18);
>
> a pivot (24) for pivotally supporting said adjustable pedal assembly (22) with respect to said support (18) and defining a pivot axis (26); and
>
> an electronic control (28) attached to said support (18) for controlling a vehicle system;
>
> said apparatus (12) characterized by said electronic control (28) being responsive to said pivot (24) for providing a signal (32) that corresponds to pedal arm position as said pedal arm (14) pivots about said pivot axis (26) between rest and applied positions wherein the position of said pivot (24) remains constant while said pedal arm (14) moves in fore and aft directions with respect to said pivot (24).

The numbers in claim 4 correspond to the numbers in Figure 2 of the '565 patent.

Appendix A

The specification of the '565 patent indicates that prior-art pedal assemblies incorporating an electronic control suffered from being too bulky, complex, and expensive to manufacture. *See* '565 patent, col. 1, ll. 48-53. It was this problem that the '565 patent set out to address. *See id.* col. 2, ll. 2-5.

Teleflex sued KSR in the Eastern District of Michigan, alleging that KSR's adjustable pedal assembly infringed claim 4 of the '565 patent. KSR moved for summary judgment of invalidity of claim 4 based on obviousness under 35 U.S.C. § 103. The district court granted KSR's motion after determining that claim 4 was obvious in view of a combination of prior art references. Teleflex timely appealed the district court's decision. We have jurisdiction pursuant to 28 U.S.C. § 1295(a)(1).

II.

This court reviews a district court's grant of summary judgment *de novo*. *Torpharm Inc. v. Ranbaxy Pharms., Inc.*, 336 F.3d 1322, 1326 (Fed. Cir. 2003). "In a patent case, as in any other, summary judgment may be granted when there are no disputed issues of material fact, . . . or when the non-movant cannot prevail on the evidence submitted when viewed in a light most favorable to it." *Knoll Pharm. Co. v. Teva Pharms. USA, Inc.*, 367 F.3d 1381, 1383 (Fed. Cir. 2004). The movant carries the initial burden of proving that there are no genuine issues of material fact. *Celotex Corp. v. Catrett*, 477 U.S. 317, 322-24, 106 S.Ct. 2548, 91 L.Ed.2d 265 (1986). If the movant shows a *prima facie* case for summary judgment, then the burden of production shifts to

the nonmovant to present specific evidence indicating there is a genuine issue for trial. *Anderson v. Liberty Lobby, Inc.*, 477 U.S. 242, 250, 106 S.Ct. 2505, 91 L.Ed.2d 202 (1986). "When ruling on a motion for summary judgment, all of the nonmovant's evidence is to be credited, and all justifiable inferences are to be drawn in the nonmovant's favor." *Caterpillar Inc. v. Deere & Co.*, 224 F.3d 1374, 1379 (Fed.Cir.2000). "Where the evidence is conflicting or credibility determinations are required, the judgment should be vacated rather than reversed, and the case should be remanded for further proceedings." *Jones v. Hardy*, 727 F.2d 1524, 1531 (Fed. Cir. 1984).

"The grant of summary judgment of invalidity for obviousness must be done on a claim by claim basis." *Knoll Pharm.*, 367 F.3d at 1383. Because patents are presumed valid, "[t]he accused infringer must prove by clear and convincing evidence that each claim that is challenged cannot reasonably be held to be non-obvious." *Id.*; *see also Monarch Knitting Mach. Corp. v. Sulzer Morat GmbH*, 139 F.3d 877, 881 (Fed. Cir. 1998). Clear and convincing evidence exists when the movant "place[s] in the mind of the ultimate fact finder an abiding conviction that the truth of its factual contentions are 'highly probable.' " *Colorado v. New Mexico*, 467 U.S. 310, 316, 104 S.Ct. 2433, 81 L.Ed.2d 247 (1994).

A patent claim is obvious, and thus invalid, when the differences between the claimed invention and the prior art "are such that the subject matter as a whole would have been obvious at the time the invention was made to a person having ordinary skill in the art." 35 U.S.C. § 103; *see also Graham v. John Deere Co.*, 383 U.S. 1, 14, 86 S.Ct. 684, 15 L.Ed.2d

545 (1966); *In re Dembiczak*, 175 F.3d 994, 998 (Fed. Cir. 1999). While obviousness is ultimately a legal determination, it is based on several underlying issues of fact, namely: (1) the scope and content of the prior art; (2) the level of skill of a person of ordinary skill in the art; (3) the differences between the claimed invention and the teachings of the prior art; and (4) the extent of any objective indicia of non-obviousness. *See Graham*, 383 U.S. at 17-18. When obviousness is based on the teachings of multiple prior art references, the movant must also establish some "suggestion, teaching, or motivation" that would have led a person of ordinary skill in the art to combine the relevant prior art teachings in the manner claimed. *See Tec Air, Inc. v. Denso Mfg. Mich. Inc.*, 192 F.3d 1353, 1359-60 (Fed. Cir. 1999); *Pro-Mold & Tool Co. v. Great Lakes Plastics, Inc.*, 75 F.3d 1568, 1572 (Fed. Cir. 1996). The nonmovant may rebut a *prima facie* showing of obviousness with evidence refuting the movant's case or with other objective evidence of nonobviousness. *See WMS Gaming, Inc. v. Int'l Game Tech.*, 184 F.3d 1339, 1359 (Fed. Cir. 1999).

"The reason, suggestion, or motivation to combine [prior art references] may be found explicitly or implicitly: 1) in the prior art references themselves; 2) in the knowledge of those of ordinary skill in the art that certain references, or disclosures in those references, are of special interest or importance in the field; or 3) from the nature of the problem to be solved, 'leading inventors to look to references relating to possible solutions to that problem.' " *Ruiz v. A.B. Chance Co.*, 234 F.3d 654, 665 (Fed.Cir.2000) (quoting *Pro-Mold*, 75 F.3d at 1572). "Our case law makes clear that the best defense against the subtle but powerful attraction of a

hindsight-based obviousness analysis is rigorous application of the requirement for a showing of the teaching or motivation to combine prior art references." *Dembiczak*, 175 F.3d at 999; *see also Ruiz*, 234 F.3d at 665 (explaining that the temptation to engage in impermissible hindsight is especially strong with seemingly simple mechanical inventions). This is because "[c]ombining prior art references without evidence of such a suggestion, teaching, or motivation simply takes the inventor's disclosure as a blueprint for piecing together the prior art to defeat patentability—the essence of hindsight." *Dembiczak*, 175 F.3d at 999. Therefore, we have consistently held that a person of ordinary skill in the art must not only have had some motivation to combine the prior art teachings, but some motivation to combine the prior art teachings in the particular manner claimed. *See, e.g., In re Kotzab*, 217 F.3d 1365, 1371 (Fed.Cir.2000) ("Particular findings must be made as to the reason the skilled artisan, with no knowledge of the claimed invention, would have selected these components for combination *in the manner claimed.*" (emphasis added)); *In re Rouffet*, 149 F.3d 1350, 1357 (Fed. Cir. 1998) ("In other words, the examiner must show reasons that the skilled artisan, confronted with the same problems as the inventor and with no knowledge of the claimed invention, would select the elements from the cited prior art references for combination *in the manner claimed.*" (emphasis added)).

III.

On appeal, Teleflex argues that we should vacate the district court's grant of summary judgment and remand the case because the district court committed multiple errors in

its obviousness determination. First, Teleflex urges that the district court erred as a matter of law by combining prior art references based on an incorrect teaching-suggestion-motivation test. Second, it contends that genuine issues of material fact still remain as to whether a person of ordinary skill in the art would have considered it obvious to combine prior art in the manner stated in claim 4. Finally, Teleflex argues that the district court erred by not properly considering the commercial success of Teleflex's patented assembly and by failing to give adequate deference to the patentability determination of the U.S. Patent and Trademark Office ("PTO").

KSR responds that the district court did apply the correct teaching-suggestion-motivation test, and that, under that test, the court correctly concluded that no genuine issues of material fact existed so as to prevent the grant of summary judgment. KSR contends that the district court properly discounted the declarations of Teleflex's experts because their opinions were based on mere legal conclusions. KSR also contends that the district court properly dismissed Teleflex's evidence of commercial success because Teleflex failed to establish a nexus between commercial success and the claimed invention. Finally, KSR argues that the district court gave proper deference to the PTO.

We agree with Teleflex that the district court did not apply the correct teaching-suggestion-motivation test. We also agree that, under that test, genuine issues of material fact exist, so as to render summary judgment of obviousness improper. For these reasons, we vacate the decision of the district court and remand for further proceedings consistent with this opinion.

Appendix A

IV.

After comparing the teachings of the prior art with claim 4 of the '565 patent, the district court concluded that, at the time of the invention, all of the limitations of claim 4 existed in the prior art. The court explained that U.S. Patent No. 5,010,782, issued to Asano et al. ("the Asano patent"), disclosed all of the structural limitations of claim 4 with the exception of the electronic control. *Teleflex*, 298 F. Supp. 2d at 592 ("Asano teaches an adjustable pedal assembly pivotally mounted on a support bracket with the pedal moving in a fore and aft directions with respect to the support and the pivot remaining in a constant position during movement of the pedal arm."). Electronic controls were well known in the prior art. *Id.* Consequently, after finding a person of ordinary skill in the art would have been motivated to combine Asano and electronic control references, the district court granted KSR's motion for summary judgment of invalidity by reason of obviousness.

The district court based its finding of a suggestion or motivation to combine largely on the nature of the problem to be solved by claim 4 of the '565 patent. *Id.* at 593-94. The court determined from the patent's specification that the invention of the '565 patent was intended to "solve the problem of designing a less expensive, less complex and more compact [assembly] design." *Id.* at 593. The court then explained that U.S. Patent No. 5,819,593, issued to Rixon et al. ("the Rixon '593 patent"),[2] also "suffered from being too

2. As explained by the district court, the Rixon '593 patent teaches the combination of an electronic control with an adjustable

(Cont'd)

complex because the pedal position sensor is located in the pedal housing and its fore and aft movement with the adjustment of the pedal could cause problems with wire failure. Thus, the solution to the problem required an electronic control that does not move with the pedal arm while the pedal arm is being adjusted by the driver." *Id.* at 594. The court then concluded that "a person with ordinary skill in the art with full knowledge of Asano and the modular pedal position sensors would be motivated to combine the two references to avoid the problems with Rixon '593." *Id.*

The district court also found an express teaching to attach the electronic control to the support bracket of a pedal assembly based on the disclosure of U.S. Patent No. 5,063,811, issued to Smith et al. ("the Smith patent"). The court explained that Smith teaches the use of a "rotary potentiometer . . . attached to a fixed support member and responsive to the pedal's pivot shaft." *Id.* Moreover, the court stated that Smith provided express teachings as to the desirability of attaching the electronic control to a fixed support member in order to avoid the wire failure problems disclosed in the Rixon '593 patent and solved by the '565 patent: "[T]he wiring to the electrical components must be secure from the possibility of chafing which will eventually

---

(Cont'd)

pedal assembly. The Rixon '593 patent and claim 4 differ, however, in that the electronic control of Rixon is attached to the pedal housing instead of the support bracket. *See Teleflex*, 298 F.Supp.2d at 594. The electronic control of the Rixon reference consequently moves during adjustment of the pedal assembly. *Id.* The electronic control of claim 4 does not move during adjustment of the pedal assembly.

result in electrical failure. Thus, the pedal assemblies must not precipitate any motion in the connecting wires themselves. . . ." *Id.* (quoting the Smith patent, col. 1, ll. 33-38).

Finally, the district court explained that the prosecution history of the '565 patent bolstered its finding of a suggestion or motivation to combine the Asano and electronic control references. The court explained that the patent examiner initially rejected the '565 patent in view of the teachings of U.S. Patent No. 5,460,061, issued to Redding et al. ("the Redding patent"), and the Smith patent. The examiner stated that the Redding patent disclosed the assembly structure of claim 4 and that Smith disclosed the electronic control attached to the assembly support structure. The patentee overcame the rejection, the court explained, by adding the limitation requiring the position of the assembly's pedal pivot to remain constant during adjustment of the assembly. (The position of the pedal pivot of the Redding patent does not remain constant during adjustment of the assembly position.) However, the Asano patent discloses an assembly where the position of the pivot remains constant during adjustment of the pedal assembly. Therefore, the district court reasoned, had Asano been cited to the patent examiner, the examiner would have rejected claim 4 as obvious in view of the Asano and Smith patents. *Id.* at 595.

We agree with Teleflex that the district court's analysis applied an incomplete teaching-suggestion-motivation test in granting KSR summary judgment. This is because the district court invalidated claim 4 of the '565 patent on obviousness grounds without making "finding[s] as to the

specific understanding or principle within the knowledge of a skilled artisan that would have motivated one with no knowledge of [the] invention to make the combination in the manner claimed." *Kotzab*, 217 F.3d at 1371. Under our case law, whether based on the nature of the problem to be solved, the express teachings of the prior art, or the knowledge of one of ordinary skill in the art, the district court was required to make specific findings as to whether there was a suggestion or motivation to combine the teachings of Asano with an electronic control in the particular manner claimed by claim 4 of the '565 patent. *See Kotzab*, 217 F.3d at 1371; *Rouffet*, 149 F.3d at 1357. That is, the district court was required to make specific findings as to a suggestion or motivation to attach an electronic control to the support bracket of the Asano assembly.

The district court correctly noted that the nature of the problem to be solved may, under appropriate circumstances, provide a suggestion or motivation to combine prior art references. However, the test requires that the nature of the problem to be solved be such that it would have led a person of ordinary skill in the art to combine the prior art teachings in the particular manner claimed. *See Rouffet*, 149 F.3d at 1357. We have recognized this situation when two prior art references address the precise problem that the patentee was trying to solve. *See Ruiz*, 357 F.3d at 1276 ("This record shows that the district court did not use hindsight in its obviousness analysis, but properly found a motivation to combine because the two references address precisely the same problem of underpinning existing structural foundations."). In this case, the Asano patent does not address the same problem as the '565 patent. The objective of the

'565 patent was to design a smaller, less complex, and less expensive electronic pedal assembly. The Asano patent, on the other hand, was directed at solving the "constant ratio problem."[3] The district court's reliance on the problems associated with the Rixon '593 patent similarly fails to provide a sufficient motivation to combine. This is because the Rixon '593 patent does not address the problem to be solved by the '595 patent; rather, it suffers from the problem. The court did not explain how suffering from the problem addressed by the '595 patent would have specifically motivated one skilled in the art to attach an electronic control to the support bracket of the Asano assembly.

Neither do we agree with the district court's reliance on the express teachings of the Smith patent. This is because the statement in the Smith patent that "the pedal assemblies must not precipitate any motion in the connecting wires," does not necessarily go to the issue of motivation to attach the electronic control on the support bracket of the pedal assembly. In other words, solving the problem of wire chafing is a different task than reducing the complexity and size of pedal assemblies. What is more, the Smith patent does not relate to adjustable pedal assemblies; therefore, it does not address the problem of wire chafing in an adjustable pedal assembly.

Our view of the case is not altered by the '565 patent's prosecution history. That is because a court's task is not to

3. The constant ratio problem refers to the problem of creating an assembly where the force required to depress the pedal remains constant irrespective of the position of the pedal on the assembly. *See* Asano patent, col. 1, l. 48-col. 2, l. 13.

speculate as to what an examiner might have done if confronted with a piece of prior art. Rather, a court must make an independent obviousness determination, taking into account the statutory presumption of patent validity. *See Torpharm*, 336 F.3d at 1329-30 ("[W]here the factual bases of an examiner's decision to allow a claim have been undermined—as in other cases where prior art not before the examiner is brought to light during litigation—a court's responsibility is not to speculate what a particular examiner would or would not have done in light of the new information, but rather to assess independently the validity of the claim against the prior art under section 102 or section 103. Such determination must take into account the statutory presumption of patent validity.").[4]

We also agree with Teleflex that the presence of genuine issues of material fact rendered summary judgment inappropriate. KSR, in the first instance, failed to make out a *prima facie* case of obviousness. The only declaration offered by KSR—a declaration by its Vice President of Design Engineering, Larry Willemsen—did not go to the ultimate issue of motivation to combine prior art, i.e. whether one of ordinary skill in the art would have been motivated to attach an electronic control to the support bracket of the assembly disclosed by Asano. Mr. Willemsen did state that

4. Noting Teleflex's argument that the district court did not give adequate deference to the PTO, we do not discern anything in the record indicating the district court failed to properly defer to the PTO. Nevertheless, we reiterate that, on remand, the district court must independently assess the evidence and determine whether KSR has provided clear and convincing evidence indicating invalidity of claim 4 by reason of obviousness.

an electronic control "could have been" mounted on the support bracket of a pedal assembly. (Willemsen Decl. at ¶ 33, 36, 39.) Such testimony is not sufficient to support a finding of obviousness, however. *See, e.g., In re Deuel*, 51 F.3d 1552, 1559 (Fed. Cir. 1995) (" 'Obvious to try' has long been held not to constitute obviousness."). Mr. Willemsen also provided the following as a "specific motivation to combine" an electronic control with an adjustable pedal assembly:

> [A]n increasing number of vehicles sold in the United States came equipped with electronic throttle control systems because such systems offered various operational advantages over cable-actuated throttle control systems. . . . In order to function in a vehicle whose engine incorporated an electronic throttle control, the adjustable pedal assembly . . . would have had to be coupled to an electronic pedal position sensor.

(Willemsen Decl. at ¶ 34, 37, 39.) This statement may be factually correct. However, the issue is not whether a person of skill in the art had a motivation to combine the electronic control with an adjustable pedal assembly, but whether a person skilled in the art had a motivation to attach the electronic control to the support bracket of the pedal assembly.

In addition, Teleflex offered two declarants—Clark J. Radcliffe, Professor of Mechanical Engineering at Michigan State University; and Timothy L. Andresen, a former engineer at Ford Motor Company and McDonnel-Douglas

Corporation—in rebuttal of the declaration of Mr. Willemsen. Mr. Radcliffe stated, *inter alia*, that "[t]he location of the electronic control" (Radcliffe Decl. at ¶ 15) in claim 4 "was a simple, elegant, and novel combination of features," (Radcliffe Decl. at ¶ 16) as opposed to the Rixon '593 patent's attachment of the electronic control to the assembly housing, which was both electrically and mechanically complex (Radcliffe Decl. at ¶ 17). Mr. Andresen also stated that the non-obviousness of claim 4 was reflected in Rixon's choice to mount the electronic control to the assembly housing instead of the assembly's support bracket. (Andresen Decl. at ¶ 5.) At the summary judgment stage of a proceeding, it is improper for a district court to make credibility determinations. *See, e.g., Jones*, 727 F.2d at 1531. Therefore, by crediting KSR's expert declarant and discrediting the two declarants offered by Teleflex, the district court erred as a matter of law.

V.

In sum,

(1) We hold that, in granting summary judgment in favor of KSR, the district court erred as a matter of law by applying an incomplete teaching-suggestion-motivation test to its obviousness determination. The correct standard requires a court to make specific findings showing a teaching, suggestion, or motivation to combine prior art teachings in the particular manner claimed by the patent at issue.

(2) Under this standard, we hold that genuine issues of material fact exist as to whether a person of ordinary skill in

the art would have been motivated, at the time the invention was made, to attach an electronic control to the support structure of the pedal assembly disclosed by the Asano patent.

(3) We consequently *vacate* the decision of the district court and *remand* the case for further proceedings on the issue of obviousness, and, if necessary, proceedings on the issues of infringement and damages.

Each party shall bear its own costs.

APPENDIX B — OPINION AND ORDER OF THE UNITED STATES DISTRICT COURT FOR THE EASTERN DISTRICT OF MICHIGAN FILED DECEMBER 12, 2003

CASE NO. 02-74586
HON. LAWRENCE P. ZATKOFF

TELEFLEX INCORPORATED, and
TECHNOLOGY HOLDING COMPANY,

Plaintiffs,

v.

KSR INTERNATIONAL CO.,

Defendant.

OPINION AND ORDER

AT A SESSION of said Court, held in the United States Courthouse, in the City of Detroit, State of Michigan, on December 12, 2003.

PRESENT: THE HONORABLE LAWRENCE P. ZATKOFF
CHIEF UNITED STATES DISTRICT JUDGE

I. INTRODUCTION

This matter is before the Court on Plaintiffs' *Ex Parte* Motion for Oral Argument, Plaintiffs' Motion for Summary Judgment of Infringement and Defendant's Motion for Summary Judgment of Invalidity. All motions have been fully

briefed by the parties. The Court finds that the parties have adequately set forth the relevant law and facts, and that oral argument would not aid in the disposition of the instant motion. *See* E.D. MICH. L.R. 7.1(e)(2). Accordingly, Plaintiffs' motion for oral argument is DENIED and the Court ORDERS that the motions be decided on the briefs submitted. For the reasons stated below, Defendant's Motion for Summary Judgment of Invalidity is GRANTED and Plaintiffs' Motion for Summary Judgment of Infringement is DENIED as moot.

II. BACKGROUND

Plaintiffs filed a three-count Complaint on November 18, 2002, alleging the following:

Count I	Infringement of United States Patent No. 6,237,565 (hereinafter "'565" or the "Engelgau patent");
Count II	Infringement of United States Patent No. 6,305,239 (hereinafter "'239"); and
Count III	Infringement of United States Patent No. 6,374,695 (hereinafter "'695").

See Complaint. On August 11, 2003, however, the Court ordered, with stipulation, dismissal of Count II and Count III. Thus, the only remaining infringement claim relates to the '565 patent, (Count I). The '565 patent describes and claims a position-adjustable vehicle pedal assembly that allows the driver of a vehicle to adjust the pedal assembly to achieve greater driving comfort. The pedal assembly

incorporates an electronic pedal position sensor for use in vehicles sold with electronically controlled engine and braking systems that require the use of an electronic sensor. Plaintiffs contend that two of Defendant's adjustable pedal assemblies infringe on claim 4 of the '565 patent.

A. Facts and Procedural History

Plaintiff Teleflex Incorporated (hereinafter "Teleflex") is a Delaware corporation and a manufacturer and supplier of adjustable pedal systems that the automotive industry uses in automobile platforms. Plaintiff Technology Holding Corporation (hereinafter "THC") is a Delaware subsidiary of Plaintiff Teleflex and is the current assignee of the '239, '695, and '565 patents. Defendant KSR International Company (hereinafter "KSR") is a Canadian company and a manufacturer and supplier of automotive components, including adjustable pedal systems, to the automotive industry. Plaintiff Teleflex and Defendant KSR are direct competitors.

This action involves position-adjustable vehicle pedal assemblies, comprising of gas and brake pedals, that a motor vehicle driver uses to actuate the motor vehicle's fuel and brake systems. The pedal assembly may also include a clutch pedal if the vehicle is equipped with a manual transmission. Defendant has offered evidence that adjustable pedal assemblies have been produced since the 1970's. It is undisputed that earlier adjustable pedal assemblies were designed to work in vehicles using cable-actuated throttle controls. In vehicles using cable-actuated throttle controls, depression of the vehicle's gas pedal causes a cable to actuate a carburetor or fuel injection unit, thereby increasing the

amount of fuel and air entering the engine. It is also undisputed that in the mid-1990's, however, increasing numbers of vehicles sold in the United States were manufactured with computer controlled engines requiring the use of "electronic throttle controls" (hereinafter "ETC's"), instead of cable-actuated throttle controls. Unlike a cable-actuated throttle control, ETC's require the use of an electronic sensor to read the position of the gas pedal and vary the engine speed based on the position of the gas pedal. According to Defendant, ETC's allow improved traction control, simplified cruise controls, and greater use of on-board computer systems to improve fuel efficiency and reduce emissions.[1]

Defendant alleges that in mid-1998, it was chosen by Ford to supply adjustable pedal systems for the Ford Crown Victoria, Mercury Grand Marquis, and Lincoln Town Car lines, commencing with the 2001 model year. According to Defendant, the Ford engines installed in these vehicles use cable-actuated throttle controls and, accordingly, the adjustable pedal assemblies supplied by Defendant included cable-attach[illegible]nt arms. Defendant alleges that it was awarded U.S. Patent No. 6,151,986 for the design of the adjustable pedal systems supplied to Ford commencing with the 2001 model year. It has not been alleged that this design infringes on any of Plaintiffs' patents.

---

1. Defendant alleges that ETC's require the use of an electronic sensor to communicate pedal input to the ETC in order to vary engine speed. Defendant refers to that electronic sensor as a "potentiometer" or "pedal position sensor." Plaintiff refers to the sensor as an "electronic control." To avoid any confusion, the Court will refer to the electronic sensor as a "pedal position sensor."

Appendix B

Defendant further alleges that in mid-2000, it was chosen by General Motors to supply adjustable pedal assemblies for the Chevrolet and GMC light truck lines, commencing with the 2003 model year. Unlike the cable-actuated Ford engines, the General Motors engines installed in the 2003 light truck lines require the use of an ETC. Defendant alleges that to be compatible with the General Motors engines, it supplied its adjustable pedal assemblies with an off-the-shelf pedal position sensor that had previously been used in 1994 and later Chevrolet and GMC pick-up trucks with optional diesel engines. Defendant alleges that it has patents pending for this design. Plaintiffs allege that this design, i.e., an adjustable pedal assembly incorporating an electronic pedal position sensor, infringes on their adjustable pedal assembly patents. By letter dated March 28, 2001, Plaintiff Teleflex stated the following to Defendant:

> We understand that you have made several proposals to General Motors Corporation based on an adjustable pedal product in combination with an electronic throttle control .... Teleflex believes that any supplier of a product that combines an adjustable pedal with an electronic throttle control necessarily employs technology covered by one or more of the above Teleflex patents and applications.

Willemsen Dec., at Ex. 2. After failing to persuade Defendant enter into a "royalty arrangement," Plaintiff Teleflex filed the present patent infringement action on November 18, 2002.

Appendix B

Before filing its Complaint on November 18, 2002, however, Plaintiff Teleflex assigned the '239, '695' and '565 patents to Plaintiff THC, a subsidiary corporation. On April 2, 2003, Defendant moved to dismiss the action for lack of subject matter jurisdiction because at that point, Plaintiff THC was not a party to the case. Defendant argued that Plaintiff Teleflex lacked standing to sue for infringement because the patents had been assigned to Plaintiff THC. The Court denied Defendant's motion as to the '565 patent finding that an exclusive license granted to Plaintiff Teleflex by Plaintiff THC afforded Plaintiff Teleflex sufficient rights in the patent to satisfy the standing requirement, notwithstanding the absence of Plaintiff THC from the action. Plaintiff Teleflex did not, however, attach sufficient documentation to prove that it had been granted an exclusive license for the '239 and '695 patents and the Court ordered the parties to show cause as to whether such exclusive licenses had been granted to Plaintiff. Instead of responding to the order to show cause, the parties stipulated to the dismissal of the '239 and '695 patents, Plaintiffs dedicating both patents to the public under 35 U.S.C. § 253. Thus, the only remaining patent-in-suit is the '565 patent, invented by Steven Englegau on February 14, 1998. The parties also stipulated to the joinder of Plaintiff THC on September 26, 2003, and Plaintiff THC has agreed to be bound by all of the papers filed by Plaintiff Teleflex in this action.

Plaintiffs allege that two of Defendant KSR's adjustable pedal systems being produced for the General Motors GMT-800 and GMT-360 vehicle platforms literally infringe on each requirement of claim 4 of the '565 patent. Defendant argues that its adjustable pedal assemblies do not infringe on the

'565 patent. Moreover, according to Defendant, the '565 patent is invalid because it would have been obvious to someone with ordinary skill in the art of designing pedal systems to combine an adjustable pedal system with an electronic pedal position sensor to work with electronically controlled engines increasingly being used in motor vehicles. The Court finds Defendant's invalidity argument persuasive and because it disposes of the case only Defendant's Motion for Summary Judgment of Invalidity will be addressed.

III. LEGAL STANDARD

Summary judgment is appropriate only if the answers to interrogatories, depositions, admissions, and pleadings combined with the affidavits in support show that no genuine issue as to any material fact remains and the moving party is entitled to a judgment as a matter of law. *See* Fed. R. Civ. P. 56(c). A genuine issue of material fact exists when there is "sufficient evidence favoring the non-moving party for a jury to return a verdict for that party." *Anderson v. Liberty Lobby, Inc.*, 477 U.S. 242, 249 (citations omitted). In application of this summary judgment standard, the Court must view all materials supplied, including all pleadings, in the light most favorable to the non-moving party. *See Matsushita Elec. Indus. Co., Ltd. v. Zenith Radio Corp.*, 475 U.S. 574, 587 (1986). "If the evidence is merely colorable or is not significantly probative, summary judgment may be granted." *Anderson*, 477 U.S. at 249-50, (citations omitted).

The moving party bears the initial responsibility of informing the Court of the basis for its motion and identifying those portions of the record that establish the absence of a

genuine issue of material fact. *See Celotex Corp. v. Catrett*, 477 U.S. 317, 323 (1986). Once the moving party has met its burden, the nonmoving party must go beyond the pleadings and come forward with specific facts to demonstrate that there is a genuine issue for trial. *See* Fed. R. Civ. P. 56(e); *Celotex*, 477 U.S. at 324. The non-moving party must do more than show that there is some abstract doubt as to the material facts. It must present significant probative evidence in support of its opposition to the motion for summary judgment in order to defeat the motion for summary judgment. *See Moore v. Philip Morris Companies*, 8 F.3d 335, 339-40 (6th Cir.1993).

IV. ANALYSIS

A. Claim 4 of the '565 Patent

The invention disclosed in the '565 patent is described in the patent's specification as a "simplified vehicle control pedal assembly that is less expensive, and which uses fewer parts and is easier to package within the vehicle." *See* '565 patent, col. 2, lines 2-4, attached to Plaintiffs' Response Brief, at Ex. J. Although the specification is useful for interpretation of claims, it is the claims that actually measure the invention. *See W.L. Gore & Assoc., Inc. v. Garlock, Inc.*, 721 F.2d 1540, 1548 (Fed.Cir.1983) (citations omitted). Claim 4 of the '565 patent broadly claims the following:

> A vehicle control pedal apparatus (12) comprising:
>
> a support (18) adapted to be mounted to a vehicle structure (20);

Appendix B

an adjustable pedal assembly (22) having a pedal arm (14) moveable in force [sic] and aft directions with respect to said support (19);

a pivot (24) for pivotally supporting said adjustable pedal assembly (22) with respect to said support (18) and defining a pivot axis (26); and

an electronic control (2) attached to said support (18) for controlling a vehicle system;

said apparatus (12) characterized by said electronic control (28) being responsive to said pivot (24) for providing signal (32) that corresponds to pedal arm position as said pedal arm (14) pivots about said pivot axis (26) between rest and applied positions wherein the position of said pivot (24) remains constant while said pedal arm (14) moves in fore and aft directions with respect to said pivot (24).

'565 patent, col. 6, lines 17-36.

According to the above-quoted language, claim 4 of the '565 patent describes a position-adjustable pedal assembly with an electronic pedal position sensor attached to the support member of the pedal assembly. Attaching the sensor to the support member allows the sensor to remain in a fixed position while the driver adjusts the pedal. Plaintiffs allege that this feature results in a pedal assembly that is less expensive, less complex, and more compact than its predecessors. Defendant, however, argues that claim 4 is

drafted so broadly as to render the "invention" an obvious combination of an adjustable pedal assembly and pedal position sensor already well known in the art.

B. Obviousness

A patent is presumed valid. *See* 35 U.S.C. § 282. Therefore, a party challenging the validity of a patent bears the burden of proving facts that establish invalidity by clear and convincing evidence. *See Moba, B.V. v. Diamond Automation, Inc.*, 325 F.3d 1306, 1319 (Fed.Cir.2003). Under 35 U.S.C. § 103, prior art invalidates a patent for obviousness when the "subject matter sought to be patented and the prior art are such that the subject matter as a whole would have been obvious at the time the invention was made to a person having ordinary skill in the art to which the subject matter pertains." 35 U.S.C. § 103(a). An obviousness inquiry under section 103 ultimately presents a question of law based on several underlying factual inquiries including: (1) the scope and content of the prior art; (2) the level of ordinary skill in the art; (3) the differences between the prior art and the claimed invention; and (4) the extent of any objective indicia of non-obviousness. *See Graham v. John Deere Co.*, 383 U.S. 1, 17-18 (1966); *Winner Int'l Royalty Corp. v. Wang*, 202 F.3d 1340, 1348 (Fed.Cir.2000). Moreover, the central inquiry under section 103 is "whether the combined teachings of the prior art, taken as a whole, would have rendered the claimed invention obvious to one of ordinary skill in the art." *In re Napier*, 55 F.3d 610, 613 (1995). Defendant argues that claim 4 is invalid for obviousness in light of the relevant prior art at the time of the invention. Plaintiffs argue that genuine issues of material fact exist that preclude summary judgment on the issue of obviousness.

Appendix B

1. The Scope and Content of the Prior Art

Under the first element of the *Graham* test for obviousness, the Court must determine the scope and content of the prior art. The scope of prior art is only that art which is analogous. *See In re Clay,* 966 F.2d 656, 658-59 (Fed.Cir.1992). Analogous art is art that is not "too remote to be treated as prior art." *In re Clay,* 966 F.2d at 657. In addition, a prior art reference is analogous if it is from the same " 'field of endeavor,' even if it addresses a different problem, or, if not within the same field, if the reference is 'reasonably pertinent' to the particular problem with which the inventor is involved." *In re Conte,* 36 Fed. Appx. 446, 450, 2002 WL 1216965, *4 (Fed.Cir.2002) (citing *In re Clay,* 966 F.2d at 658-59). The determination of relevant prior art is a question of fact. *In re Clay,* 966 F.2d at 658.

Relevant prior art is further defined by 35 U.S.C. §§ 102(a) and (b), which limit the time frame within which prior art can be found. Sections 102(a) and (b) provide:

> A person shall be entitled to a patent unless -
>
> (a) the invention was known or used by others in this country, or patented or described in a printed publication in this or a foreign country, before the invention thereof by the applicant for patent, or
>
> (b) the invention was patented or described in a printed publication in this or a foreign country or in public use or on sale in this country, more than one year prior to the date of the application for patent in the United States.

Appendix B

According to interrogatory answers served by Plaintiff Teleflex, the inventions claimed in the '565 patent were made on February 14, 1998. Under section 102(a), the prior art of the '565 patent includes any analogous patents or printed publications issued prior to February 14, 1998. Furthermore, the '565 patent issued from a "continuation" application that claimed priority to a "parent" application filed January 26, 1999. Thus, under section 102(b), the prior art of the '565 patent also includes any analogous products that were in public use or on sale in the United States on or before January 26, 1998, a year prior to the application date of the '565 patent. It is undisputed that the prior art alleged by Defendant conform to the time limitations of 35 U.S.C. §§ 102(a) and (b).

In fact, Plaintiffs' only dispute the relevance of one prior art reference asserted by Defendant, U.S. Patent No. 5,010,782 (hereinafter "Asano"). Like the patent-in-suit, Asano discloses a position adjustable pedal assembly. The pedal assembly is pivotally mounted on a support which is connected to the vehicle. A pedal arm moves forward and backward along a guide member by way of a screw drive mechanism. The position of the support pivot remains in a constant position while the pedal arm moves forward and backward along the guide member. Depression of the foot pedal causes the pedal assembly to pivot and actuate a cable operated throttle control. Plaintiffs argue that because Asano depicts a complex pedal assembly design, an inventor presented with Engelgau's problem of how to design a less complex and less expensive adjustable pedal assembly "would shun Asano." *See* Plaintiff Teleflex's Response Brief, at 20. Defendant responds by arguing that none of the features

that allegedly make the '565 patent less complex or less expensive are claimed in claim 4 of the invention. Therefore, according to Defendant, the alleged features that make the patent-in-suit less complex or less expensive are legally irrelevant.

Each party asserts that relevant art is defined by the nature of the problem confronting the would-be inventor. *See Ryko Mfg. Co. v. Nu-Star, Inc.*, 950 F.2d 714, 716 (Fed.Cir.1991); *Stratoflex, Inc. v. Aeroquip Corp.*, 713 F.2d 1530, 1535 (Fed.Cir.1983). Determining relevant prior art, however, involves determining the scope of the inventor's "field of endeavor" before turning to the question of the nature of the problem confronting the inventor. As the Federal Circuit explained in *In re Wood:*

> The determination that a reference is from a nonanalogous art is ... two-fold. First, we decide if the reference is within the field of the inventor's endeavor. If it is not, we proceed to determine whether the reference is reasonably pertinent to the particular problem with which the inventor was involved.

In re Wood, 599 F.2d 1032, 1036 (Cust. & Pat.App.1979). Thus, an inquiry into the problem facing the inventor only arises if the alleged prior art is not within the inventor's same field of endeavor. Furthermore, if the alleged prior art exists in the inventor's field of endeavor, it constitutes relevant prior art "regardless of the problem addressed." *In re Clay,* 966 F.2d at 658-59.

Appendix B

The Court finds that Asano is within Engelgau's field of endeavor. Engelgau's field of endeavor is the position-adjustable pedal assembly area of the automotive component industry. Engelgau admits in his affidavit that before designing the '565 patent he "was generally aware of the various designs in the fields of fixed and adjustable pedal assemblies as well as electronic controls." Plaintiff's Response Brief, at Ex. A. Furthermore, references in the first paragraph of the background section of the patent-in-suit to position-adjustable pedal assemblies in general, apart from their use with electronic pedal position sensors or electronic throttle controls, supports a finding that cable-actuated position-adjustable pedal assemblies such as Asano are within Engelgau's field of endeavor. *See In re Wood*, 599 F.2d at 1036 (finding that reference in the patent's specification to a field of art encompassing the alleged prior art supported a finding that the alleged prior art was within the inventor's field of endeavor.) Accordingly, the Court finds Asano to be analogous prior art to the '565 patent.

Other than Asano, Plaintiffs have not disputed that the prior art cited by Defendant is analogous. The Court finds the following to be analogous prior art and sufficient to establish obviousness by clear and convincing evidence:

1. U.S. Patent No. 5,010,782 filed July 28, 1989 (hereinafter "Asano");

2. U.S. Patent No. 5,998,892 filed September 4, 1996 (hereinafter " '892");

3. U.S. Patent No. 5,408,899 filed June 13, 1993 (hereinafter " '899");

4. U.S. Patent No. 5,241,936 filed September 9, 1991 (hereinafter " '936");

5. U.S. Patent No. 5,460,061 filed September 17, 1993 (hereinafter "Redding");

6. U.S. Patent No. 5,063,811 filed July 9, 1990 (hereinafter "Smith");

7. Various modular self-contained pedal position sensors, including U.S. Patent No. 5,385,068 filed December 18, 1992 (hereinafter " '068") and the "503 Series" pedal position sensor manufactured by CTS Corporation; and

8. A non-position adjustable pedal assembly installed in certain 1994 Chevrolet pick-up trucks comprising of a CTS 503 Series pedal position sensor attached to the pedal assembly support bracket, adjacent to the pedal and engaged with the pivot shaft about which the pedal rotates in operation.

The Court will briefly describe each of the above prior art.

a. The Asano patent

As the Court previously described, Asano discloses a position adjustable pedal assembly pivotally mounted on a

support member. A pedal arm moves forward and backward along a guide member by way of a screw drive mechanism depending on the driver's desired pedal position. The position of the support pivot remains constant while the pedal arm moves forward and backward along the guide member. The design also discloses an attachment for a mechanical throttle cable, the cable being responsive to the pivoting motion of the pedal assembly caused by depression of the accelerator pedal.

b. The '892 and '899 patents

The '892 and '899 patents disclose electronic pedal position sensors. Each patent teaches the desirability of electronic throttle controls and electronic connections, as distinguished from mechanical throttle controls and mechanical connections, between vehicle accelerator pedals and engine throttles.

c. The '936 patent

The '936 patent discloses a non-adjustable pedal assembly incorporating a pedal position sensor. The '936 patent teaches the desirability of placing the pedal position sensor inside the vehicle's passenger compartment mounted on the pedal support member adjacent to a vehicle's accelerator pedal, rather than in a vehicle's engine compartment.

Appendix B

d. The Redding patent

The Redding patent discloses an adjustable accelerator pedal assembly in which the accelerator pedal arm slides back and forth along a guide member, but in contrast to Asano and the patent-in-suit, the accelerator pedal pivot moves during pedal adjustment.

e. The Smith patent

The Smith patent discloses an electronic pedal position sensor attached to an accelerator pedal support bracket and engaged with a pivot shaft. During the prosecution history of the '565 patent, the Patent Examiner held the combination of Redding and Smith to be obvious.

f. The 503 Series pedal position sensor used in certain 1994 Chevrolet pick-up trucks and the pedal position sensor described in the '068 patent.

These modular pedal position sensors teach the advantage of using a pedal position sensor that is engaged with the pivot shaft of an accelerator pedal to send an electronic signal to an electronic throttle control based on the degree the pivot shaft turns in response to depression of the accelerator pedal. In the case of the pedal assembly in certain 1994 Chevrolet pick-up trucks, the modular 503 Series pedal position sensor is mounted to the pedal assembly's support bracket and engaged with the pedal's pivot shaft. The 503 Series pedal position sensor and the pedal position sensor disclosed in the '068 patent will hereinafter collectively be referred to as "the modular pedal

position sensors." As previously stated, the Court finds all of the above described prior art to be relevant and analogous to the patent-in-suit.

ii. The Level of Ordinary Skill in the Art

The second element in the *Graham* test for obviousness requires determining the level of ordinary skill in the pertinent art. *See Graham*, 383 U.S. at 17-18, 86 S.Ct. 684. Ascertaining the level of ordinary skill in the art is necessary for maintaining objectivity in the obviousness inquiry. *See Ryko*, 950 F.2d at 719. Factors to consider include the educational level of the inventor, the educational level of those who work in the relevant industry, and the sophistication of the technology involved. *See id.*

The parties' experts dispute the level of ordinary skill in the art of designing adjustable pedal assemblies. Plaintiff's expert, Professor Clark J. Radcliffe, argues that "a person of ordinary skill in the art would be one with an undergraduate degree in mechanical engineering (or an equivalent amount of industry experience) who has familiarity with pedal control systems for vehicles." *See* Plaintiff's Response Brief, at Ex. H, ¶ 7. Defendant's expert, Larry Willemsen, argues that a person of ordinary skill in the art would have had "a minimum of two (2) years of college level training in mechanical engineering and two-three years' work experience spanning at least one complete pedal design 'cycle.' " Willemsen Decl., at ¶ 20. The Court finds little difference between these two positions. Furthermore, Defendant has agreed to adopt Professor Radcliffe's understanding of the level of ordinary skill in the art to the extent it differs from Mr. Willemsen's.

Therefore, the Court finds the level of ordinary skill in the art to be a hypothetical person with an undergraduate degree in mechanical engineering or an equivalent amount of industry experience who has familiarity with pedal control systems for vehicles.

iii. Differences Between the Prior Art and the ClaimedInvention

The third element in the *Graham* analyses requires the determination of any differences between the teachings found in the prior art and the claimed invention, from the vantage point of a hypothetical person with ordinary skill in the art. *See Graham*, 383 U.S. at 17-18, 86 S.Ct. 684; *Velander v. Garner*, 2003 WL 2249519 (Fed.Cir.2003). The claims of the patent-in-suit must be considered "as a whole." *W.L. Gore & Assoc., Inc. v. Garlock, Inc.*, 721 F.2d 1540, 1547-48 (Fed.Cir.1983). It is "[t]he claims, not [the] particular embodiments [that] must be the focus of the obvious inquiry." *Jackson Jordan, Inc. v. Plasser American Corp.*, 747 F.2d 1567, 1578 (Fed.Cir.1984). The Federal Circuit has expressed the significance of claims in defining an invention:

> The claims of the patent provide the concise formal definition of the invention. They are the numbered paragraphs which particularly point out and distinctly claim the subject matter which the applicant regards as his invention. It is to these wordings that one must look to determine whether there has been infringement. Courts can neither broaden nor narrow the claims to give the patentee something different than what he has set forth.

Appendix B

> No matter how great the temptations of fairness or policy making, courts do not rework claims. They only interpret them.

E.I. du Pont de Nemours & Co. v. Phillips Petroleum Co., 849 F.2d 1430, 1433 (Fed.Cir.1988) (quoting *Autogiro Co. of America v. United States*, 181 Ct.Cl. 55, 384 F.2d 391, 395-96 (1967)) (internal quotations and alterations omitted). Thus, while it is entirely proper to use the specification of the patent to interpret what the patentee meant by a word or phrase in a claim, adding to the claim an extraneous limitation appearing in the specification is improper. *See E.I. du Pont de Nemours & Co.*, 849 F.2d at 1433 (citations omitted).

Review of prior art, however, is not limited to claims asserted in the prior art. Differences between prior art and the claimed invention are "ascertained by interpretation of the *teachings* of the prior art and of the *claims* of the patent." CHISUM ON PATENTS, § 5.03[5], 5-239 (2003) (emphasis added). In other words, a prior art reference must be considered in its entirety in an obviousness inquiry and must include a "full appreciation of what such reference fairly suggests to one of ordinary skill in the art." *W.L. Gore*, 721 F.2d at 1550.

The claims of the patent-in-suit are the starting point for determining any differences between the patent-in-suit and the prior art. Claim construction is a question of law for the Court to resolve. *See Markman v. Westview Instruments, Inc.*, 52 F.3d 967, 979 (Fed.Cir.1995). Some courts routinely hold *Markman* hearings to determine the proper interpretation of claim language. This procedure is not always necessary,

however. *See e.g. Rogers v. Desa Int'l, Inc.* 166 F.Supp.2d 1202, 1204 (E.D.Mich.2001). The subject matter of the '565 patent is not technologically or linguistically complex. Furthermore, neither party disputes any language of claim 4 in the context of Defendant's motion for invalidity. Accordingly, the Court finds a *Markman* hearing to be unnecessary. *See Rogers*, 166 F.Supp.2d at 1205.

In addition, the Court is not faced with disputed claim language to resolve. *See U.S. Surgical Corp. v. Ethicon, Inc.*, 103 F.3d 1554, 1568 (Fed.Cir.1997). As the court in *U.S. Surgical Corp.* stated:

> Claim construction is a matter of resolution of disputed meanings and technical scope, to clarify and when necessary to explain what the patentee covered by the claims, for use in the determination of infringement. It is not an obligatory exercise in redundancy. [C]laim construction may occasionally be necessary in obviousness determinations, when the meaning or scope of technical terms and words of art is unclear and in dispute and requires resolution in order to determine obviousness ....

U.S. Surgical Corp., 103 F.3d at 1568. Accordingly, the Court will base its decision on the plain, ordinary, and undisputed language of claim 4 and any ambiguities will be resolved against the moving party. *See Electronic Planroom, Inc. v. McGraw-Hill Companies*, 135 F.Supp.2d 805, 832 (E.D.Mich.2001).

Appendix B

As described above, claim 4 of the '565 patent broadly discloses the following: an adjustable pedal assembly comprising of a support member with a pivot supporting the pedal assembly with respect to the support member, the pivot remaining in constant position while the pedal moves in fore and aft directions with respect to the pivot. The '565 patent further discloses an electronic pedal position sensor attached to the support member and being responsive to the pivot of the pedal assembly for providing a signal to the engine based on the position of the pedal as the pedal assembly pivots about its pivot axis.

The Court finds little difference between the teachings of the prior art and claims of the patent-in-suit. Asano teaches the structure and function of each of the claim 4 limitations, except those relating to an electronic pedal position sensor. Specifically, Asano teaches an adjustable pedal assembly pivotally mounted on a support bracket with the pedal moving in a fore and aft directions with respect to the support and the pivot remaining in a constant position during movement of the pedal arm. Thus, Asano "fairly suggests" the same mechanical assembly design asserted in claim 4 of the patent-in-suit. *W.L. Gore*, 721 F.2d at 1550.

Plaintiffs argue that Asano is vastly different from the patent-in-suit. This may be a correct observation based on the preferred embodiment of each patent; however, none of the structural features asserted in claim 4, with the exception of the electronic pedal position sensor, result in an invention that is structurally different from Asano. As Defendant correctly points out, it would be improper to import extraneous limitations from the specification of the '565

patent to avoid a finding of obviousness. *See E.I. du Pont de Nemours & Co.*, 849 F.2d at 1433. Accordingly, the Court finds that Asano teaches every limitation contained in claim 4, with the exception of the limitation referring to an electronic pedal position sensor.

The electronic pedal position sensor asserted in claim 4, however, is fully disclosed by other prior art references. Both the 503 Series pedal position sensor and the '068 patent teach an electronic pedal position sensor being responsive to the pedal pivot shaft and causing a signal to be sent to the engine to increase or decrease engine speed based on the rotation of the pivot shaft. In other words, the 503 Series pedal position sensor and the pedal position sensor disclosed in the '068 patent are designed to be responsive to a pedal's pivot shaft in the same manner as the electronic pedal position sensor described in claim 4 of the '565 patent. Accordingly, prior art expressly teaches both the pivotally mounted pedal assembly and the electronic pedal position sensor asserted in claim 4.

a. Suggestion to combine

The fact that Asano and the modular pedal position sensors teach the invention disclosed in claim 4 does not render their combination obvious, however, unless there is "some motivation or suggestion to combine the prior art teachings," either in the prior art itself, or by reasonable inference from the nature of the problem, or from the knowledge of those of ordinary skill in the art. *See Al-Site Corp., v. VSI Int'l, Inc.*, 174 F.3d 1308, 1324 (Fed.Cir.1999); *see also Yamanouchi Pharmaceutical Co., Ltd., v. Danbury*

Pharmacal, Inc., 231 F.3d 1339, 1343 (Fed.Cir.2000) ("[T]he suggestion to combine requirement stands as a critical safeguard against hindsight analysis and rote application of the legal test for obviousness."); *ACS Hospital Sys., Inc. v. Montefiore Hospital*, 732 F.2d 1572, 1577 (Fed.Cir.1984) ("Obviousness cannot be established by combining the teachings of the prior art to produce the claimed invention, absent some teaching or suggestion supporting the combination.") It is undisputed that in the mid-1990's more cars required the use of an electronic device, such as a pedal position sensor, to communicate driver inputs to an electronically managed engine. It is also undisputed that adjustable pedal assemblies have existed in the art since the late 1970's. Clearly it was inevitable that adjustable pedal assemblies would be joined with an electronic device to work in conjunction with modern electronically controlled engines. This fact is displayed in the prior art by Rixon '593, which discloses an adjustable pedal assembly operating in conjunction with an electronic throttle control. *See* Plaintiffs' Response Brief, at Ex. L. According to one of Plaintiffs' experts, Timothy Andresen, unlike the patent-in-suit, Rixon '593 discloses an adjustable pedal assembly with an electronic sensor that is not attached to the pedal mounting bracket and moves during pedal adjustment. *See* Andresen Decl., at ¶¶ 5-6. Andresen states that placing the electronic sensor "where it moves during pedal adjustment can be undesirable due to the potential for electrical connector wire fatigue failure and/or insulation abrasion." *Id.* at ¶ 6. It is undisputed that Engelgau sought to improve on this design. *See* Plaintiff's Response Brief, at Ex. J, Col. 1, lines 43-52. According to Andresen, Engelgau's mounting of the electronic pedal position sensor to the pedal assembly support

bracket separated the pedal adjustment movement from the electronic sensor. Andresen Decl. at ¶ 7. Andresen argues that this is the "critical feature" of the design that would not have been obvious to someone familiar with the state of art. *See* Andresen Decl. at ¶ 7. It is also this feature which, according to Andresen, "optimizes package space requirements, minimizes weight, and simplifies the overall design." *Id.* at ¶ 9. Thus, the issue is whether something in the prior art suggests combining the teachings of Asano, a pedal assembly in which the pivot does not move with pedal adjustment, with the teachings of the various modular pedal position sensors known in the art to solve the problem of designing a less expensive, less complex and more compact design.[2]

The incentive to combine prior art references can come from the prior art itself or be reasonably inferred from the "nature of the problem to be solved, leading inventors to look to references related to solutions to that problem."

---

2. Plaintiffs' experts agree that the alleged novelty of the '565 patent is found in the fact that the electronic control is mounted to the pedal assembly support member and responsive to the pivotal motion of the pedal pivot shaft. *See* Radcliffe Decl. at ¶ 15; Andresen Decl. at ¶ 5-7. This feature is asserted in claim 4. In addition, however, Plaintiffs argue that the problem of designing a less complex, less expensive, and more compact design was also solved by the simplified adjustable pedal assembly disclosed in the preferred embodiment of the '565 patent. Plaintiffs make the argument in an attempt to distinguish Asano. This argument, however, is unavailing because, as the Court noted above, claim 4 contains none of the limitations that allegedly make the preferred embodiment of the pedal assembly structurally less complex than the Asano pedal assembly. *See E.I. du Pont de Nemours & Co.*, 849 F.2d at 1433 (citations omitted).

Appendix B

Pro-Mold & Tool Co. v. Great Lakes Plastics, Inc., 75 F.3d 1568, 1573 (Fed.Cir.1996). According to Plaintiff's experts, prior art such as the Rixon '593 suffered from being too complex because the pedal position sensor is located in the pedal housing and its fore and aft movement with the adjustment of the pedal could cause problems with wire failure. Thus, the solution to the problem required an electronic control that does not move with the pedal arm while the pedal arm is being adjusted by the driver. The Court finds that a person with ordinary skill in the art with full knowledge of Asano and the modular pedal position sensors such as the CTS 503 Series would be motivated to combine the two references to avoid the problems with Rixon '593.

In addition, the fact that Asano and the modular pedal position sensors both relate to the art of vehicle pedal systems is a factor suggesting their combination. *See In re Harmon*, 42 C.C.P.A. 921, 222 F.2d 743, 746 (1955) ("That the references would have suggested doing what appellant has done to anyone skilled in the art seems beyond doubt since both references relate to coating . . . ."); *In re Marx*, 43 C.C.P.A. 880, 232 F.2d 638, 640 (1956) ("since both patents relate to the same art, it would readily have occurred to one having cognizance of the features of the references that it might be desirable to [combine them]."); *Display Technologies, Inc. v. Paul Flum Ideas, Inc.*, 60 Fed.Appx. 787, 794, 2002 WL 32066815 (Fed.Cir.2002) ("The district court did not err in combining the prior art references in this case. The [prior art references] all are within the same field of gravity-fed beverage dispensers.") Furthermore, the prior art contains express teachings with respect to the desirability of attaching pedal position sensor to the support member of

a pedal assembly with the sensor being responsive to the pedal's pivot shaft in the same manner as the invention claimed in the '565 patent. *See* U.S. Patent No. 5,063,811 to Smith (hereinafter "Smith"), attached to Defendant's Reply Brief, at Ex. 5. Smith reveals a rotary potentiometer, which provides basically the same function as the 503 Series pedal position sensor, attached to a fixed support member and responsive to the pedal's pivot shaft. Additionally, Smith contains express teachings as to the desirability of attaching an electronic control to a support member in order to avoid the wire failure problems identified with Rixon '593 and allegedly solved by the patent-in-suit: "[T]he wiring to the electrical components must be secure from the possibility of chafing which will eventually result in electrical failure. Thus, the pedal assemblies must not precipitate any motion in the connecting wires themselves . . . ." *Id.* at Col. 1, lines 33-38. Accordingly, the Court finds that Defendant has offered sufficient evidence of a suggestion to combine a pivotally mounted adjustable pedal assembly with an off-the-shelf modular pedal position sensor to solve the problem of designing a less expensive, less complex, and more compact adjustable pedal assembly for use with electronically controlled vehicles.

A finding of obviousness is further supported by the prosecution history of the patent-in-suit. Defendant points out that during prosecution of the '565 patent before the Patent and Trademark Office, the Examiner rejected a claim similar to claim 4 as an obvious combination of prior art. Specifically, the Examiner cited Redding for its disclosure of an adjustable pedal assembly comprising of a pedal movable in fore and aft directions on a pivotally movable

guide rail mounted to a support member. The Examiner cited Smith for is disclosure of an electronic pedal position sensor attached to a pedal assembly support member, which the Examiner described as "old and well known in the art." *See* Office Action of November 13, 2000, attached to Defendant's Reply Brief, at Ex. 3. The Examiner stated his obviousness conclusion in the following manner:

> Since the prior are [sic] references are from the field of endeavor, the purpose disclosed by Brown [sic] would have been recognized in the pertinent art of Redding. Therefore it would have been obvious at the time the invention was made to provide the device of Redding with the electronic throttle contro! means attached to a support member as taught by Smith.

Id. at 3.

Claim 4 of the '565 patent was allowed by the Examiner, however, because of an added structural limitation, "wherein the position of said pivot (24) remains constant while said pedal arm (14) moves in fore and aft directions with respect to said pivot (24)." '565 patent, col. 6, lines 33-36. Adding this structural limitation distinguished the patent-in-suit from Redding because the pedal pivot described in Redding does not remain constant while the pedal arm moves in fore and aft directions. Asano, however, discloses a pivot that does remain in a constant position while the pedal arm moves back and forth. Thus, the Court finds persuasive Defendant's argument that if Asano had been cited to the Examiner, he would have found the combination of Asano and Smith to

be obvious, just as he found the combination of Redding and Smith to be obvious.

i. Secondary Considerations

The final element of the *Graham* test for obviousness requires ascertaining the extent of any objective indicia of non-obviousness. *See Graham*, 383 U.S. at 17-18, 86 S.Ct. 684. These so-called "secondary considerations" include commercial success, long-felt need, failure of others, skepticism and unexpected results. *See 3M v. Johnson & Johnson Orthopaedics, Inc.*, 976 F.2d 1559, 1573 (Fed.Cir.1992). In some cases, such evidence is the most probative of obviousness. *See Richardson-Vicks, Inc. v. Upjohn Co.*, 122 F.3d 1476, 1483 (Fed.Cir.1997) (citing *Stratoflex*, 713 F.2d at 1538). Secondary considerations, however, do not control the obviousness inquiry. *See Richardson-Vicks*, 122 F.3d at 1483 (citing *Newell Companies, Inc. v. Kenney Mfg. Co.*, 864 F.2d 757, 768 (Fed.Cir.1988)). In other words, secondary considerations "are but a part of the 'totality of the evidence' that is used to reach the ultimate conclusion of obviousness." *See Richardson-Vicks*, 122 F.3d at 1483.

Plaintiffs argue that the commercial success of the design depicted in the Engelgau patent supports a finding of non-obviousness. Commercial success, however, "is relevant only if it flows from the merits of the *claimed* invention." *Sjolund v. Musland*, 847 F.2d 1573, 1582 (Fed.Cir.1988). In other words, the party asserting commercial success must prove a nexus between the commercial success and the claimed invention. *See Simmons Fastener Corp. v. Illinois Tool Works, Inc.*, 739 F.2d 1573, 1575 (Fed.Cir.1984).

Appendix B

Plaintiffs offer the declaration of Plaintiff Teleflex's Director of Pedal Engineering, Charles Meier. *See* Plaintiffs' Response Brief, at Ex. M. According to Mr. Meier, the "adjustable pedal assembly design referenced in the Engelgau patent has been placed in Ford's U-137/P-131 program." *Id.* at ¶ 3. Furthermore, according to Mr. Meier, Plaintiff Teleflex has "shipped approximately 150,000 adjustable pedal units to Ford for the U-137/P-131 program." *Id.* at ¶ 5. The Court finds this evidence insufficient to overcome Defendant's strong showing of obviousness.

Plaintiff has offered an overall sales figure for the adjustable pedal assembly design "referenced in the Engelgau patent." *Id.* at ¶ 3. As Defendant correctly notes, the pedal assembly design referenced in the Engelgau patent describes two embodiments, one comprising of a optional "cable attachment member 78" for use with engines utilizing a cable-actuated throttle control, and a second comprising of an "electronic throttle control 28." The embodiment comprising of a "cable attachment member 78" is not protected by claim 4. Without knowing what amount, if any, of the 150,000 units allegedly sold incorporated an electronic throttle control protected by claim 4, it is impossible to gauge the commercial success of the invention. Furthermore, even if the Court was presented with enough evidence to find some or all of the unit sales to be of a pedal assembly protected by claim 4, the evidence would still amount to simple sales figure with no evidence of nexus. *See Kansas Jack, Inc. v. Kuhn*, 719 F.2d 1144, 1151 (Fed.Cir.1983) (upholding the district court's invalidity ruling and holding the patent obvious when "the evidence of commercial success consisted solely of the number of units sold"); *In re Baxter Travenol Labs.*, 952

F 2d 388 (Fed Cir 1991) (citing *Kansas Jack, Inc*, 719 F.2d at 1151) ("information solely on numbers of units sold is insufficient to establish commercial success")

In addition, Plaintiffs have not attempted to offer evidence of any other secondary consideration, such as long-felt need or failure of others The Federal Circuit has found that this fact warrants giving less weight to an argument based on commercial success *See Merck & Co v Biocraft Laboratories, Inc*, 874 F 2d 804, 809 (Fed.Cir.1989) ("Commercial success is an indication of nonobviousness that must be considered in a patentability analysis . but in the circumstances of this case, where it is the only such indication, it is insufficient to render Merck's claimed invention nonobvious") Therefore, the Court finds the evidence of commercial success insufficient to overcome Defendant's clear and convincing evidence of obviousness.

5. Conclusion

Accordingly, the Court finds that a hypothetical person with an undergraduate degree in mechanical engineering or an equivalent amount of industry experience who has familiarity with pedal control systems for vehicles would have found it obvious to attach a modular pedal position sensor to Asano's support member, with the pedal position sensor being responsive to the pedal assembly's pivot shaft. Therefore, claim 4 of the '565 is invalid for obviousness. *See* 35 U S C § 103(a)

Appendix B

V. CONCLUSION

For the reasons set forth above, Defendant's Motion for Summary Judgment of Invalidity is GRANTED. Plaintiffs' *Ex Parte* Motion for Oral Argument is DENIED. Plaintiffs' Motion for Summary Judgment of Infringement is DENIED as moot.

IT IS SO ORDERED.

Dated: December 12, 2003

LAWRENCE P. ZATKOFF
CHIEF UNITED STATES
DIRTRICT JUDGE

AMER
RECORDS
AND
BRIEFS

(4)

No. 04-1350

Supreme Court, U.S.
FILED
JUN 21 2005
OFFICE OF THE CLERK

IN THE

Supreme Court of the United States

KSR INTERNATIONAL CO.,

Petitioner,

v.

TELEFLEX INC. and TECHNOLOGY HOLDING CO.,

Respondents.

ON PETITION FOR A WRIT OF CERTIORARI TO THE UNITED STATES COURT OF APPEALS FOR THE FEDERAL CIRCUIT

BRIEF IN OPPOSITION

RODGER D. YOUNG
Counsel of Record
STEVEN SUSSER
DAVID J. POIRIER
YOUNG & SUSSER, P.C.
26200 American Drive
Suite 305
Southfield, Michigan 48034
(248) 353-8620

Attorneys for Respondents

195043

COUNSEL PRESS
(800) 274-3321 • (800) 359-6859

LIBRARY OF CONGRESS
LAW LIBRARY

QUESTION PRESENTED FOR REVIEW

The District Court granted summary judgment in favor of Petitioner, KSR, finding the patent at issue was invalid as obvious. To reach this conclusion, the District Court: (1) considered competing affidavits of experts and chose to credit the affidavit proffered by the moving party, KSR; (2) neglected to make required factual findings relating to obviousness, and (3) concluded as a matter of law that the patent at issue was obvious even though no other prior design or patent disclosed or even suggested the combination of an adjustable pedal coupled with an electronic throttle control that remained stationary during the adjustment process.

The issue here is whether the Federal Circuit Court erred by vacating the District Court's published decision, which revealed glaring errors in the handling and weighing of evidence on summary judgment, and which applied an erroneous legal standard for determining obviousness. The Federal Circuit Court's decision is wholly consistent with firmly-established evidentiary and procedural rules, as well as this Court's standards for determining obviousness. KSR's petition for certiorari is not nearly as significant as it attempts to portray -- it should be denied in the same manner that this Court has denied petitions on this issue for the last twenty-three years.

CORPORATE DISCLOSURE STATEMENT

Respondent Teleflex Inc. is the parent company of Respondent Teleflex Holding Co. and is the only publicly held company that owns 10% or more of the stock of Teleflex Holding Co.

Respondent Teleflex Inc. has no parent corporation and no publicly held company owns 10% or more of its stock.

TABLE OF CONTENTS

	Page
Question Presented for Review	i
Corporate Disclosure Statement	ii
Table of Contents	iii
Table of Cited Authorities	v
Statement of the Case	1
A. The Product Involved In This Suit	3
B. The Prior Art In Effect When The Inventor Of The '565 Patent Invented The Teleflex Adjustable Pedal System With Fixed Electronic Controls	4
C. Invention Of The '565 Patent	5
D. The District Court Decision	6
E. The Federal Circuit Court Decision	8
Reasons for Denying the Petition	10
A. The Federal Circuit Has Not Abandoned This Court's Precedent Or Section 103	10

Contents

Page

B. The Federal Circuit Did Not Err By Determining That Genuine Issues Of Material Fact Existed, Thereby Precluding Summary Judgment 17

C. The Court Has Consistently Declined To Review The Federal Circuit's Decisions On Obviousness 20

D. KSR's So-Called "Circuit Split" Is Overblown And Manufactured 22

Conclusion 23

TABLE OF CITED AUTHORITIES

Page

Cases:

Allen Engineering Corp. v. Bartell Indus., 299 F.3d 1336 (Fed. Cir. 2002) 21, 22, 23

American Hoist & Derrick Co. v. Sowa & Sons, Inc., 725 F.2d 1350 (Fed. Cir. 1984), *cert. denied*, 469 U.S. 821 (1984) 17-18

Anderson v. Liberty Lobby, Inc., 477 U.S. 242 (1986) 17

Anderson's-Black Rock, Inc. v. Pavement Salvage Co., 396 U.S. 57 (1969) 13, 14, 20

Ashland Oil, Co. v. Delta Resins & Refractories, Inc., 776 F.2d 281 (Fed. Cir. 1985), *cert. denied*, 475 U.S. 1017 (1986) 13, 14, 17

Beckson Marine, Inc. v. NFM, Inc., 292 F.3d 718 (Fed. Cir. 2002) 17

Bonito Boats, Inc. v. Thunder Craft Boats, Inc., 489 U.S. 141 (1989) 14

Colorado v. New Mexico, 467 U.S. 310 (1994) ... 18

Custom Accessories, Inc. v. Jeffrey-Allan Indus., Inc., 807 F.2d 955 (Fed. Cir. 1986) 16

Cited Authorities

Page

Ecolochem, Inc. v. Southern California Edison Co., 227 F.3d 1361 (Fed. Cir. 2000), *cert. denied*, 532 U.S. 974 (2001) 14, 15, 21

Graham v. John Deere Co., 383 U.S. 1 (1966) ... *passim*

Grain Processing Corp. v. American Maize-Products Co., 840 F.2d 902 (Fed. Cir. 1988) 15

Holmes Group, Inc. v. Vornado Air Circulation Systems, Inc., 525 U.S. 826 (2002) 22

In re Gurley, 27 F.3d 551 (Fed. Cir. 1994) 15

Kahn v. General Motors Corp., 135 F.3d 1472 (Fed. Cir. 1998), *cert. denied*, 525 U.S. 875 (1998) ... 15

Langston v Southwestern Bell Telephone Co., 945 F.2d 416 (Fed. Cir. 1991), *cert. denied*, 503 U.S. 914 (1992) 21

McGinley v. Franklin Sports, Inc., 262 F.3d 1339 (Fed. Cir. 2001) 16

Medical Instrumentation and Diagnostics Corp. v. Elekta AB, 344 F.3d 1205 (Fed. Cir. 2003), *cert. denied*, 541 U.S. 959 (2004) 18

Medtronic, Inc. v. Daig Corp., 789 F.2d 903 (Fed. Cir. 1986), *cert. denied*, 479 U.S. 931 (1986) ... 21

Cited Authorities

Page

Modine Mfg. Co. v. Allen Group, Inc., 917 F.2d 538 (Fed. Cir. 1990), *cert. denied*, 500 U.S. 918 (1991) 21

Nickson Indus., Inc. v. Rol Mfg. Co., 765 F.2d 160 (Fed. Cir. 1985) (table), *cert. denied*, 474 U.S. 843 (1985) 20

Panduit Corp. v. Dennison Mfg. Co, 810 F.2d 1561 (1987), *cert. denied*, 481 U.S. 1052 (1987) 16, 18

Polaroid Corp. v. Eastman Kodak Co., 789 F.2d 1556 (Fed. Cir. 1986), *cert. denied*, 479 U.S. 850 (1986) 21

Sakraida v. Ag Pro, Inc., 425 U.S. 273 (1976) ... 13, 14, 20

SmithKline Diagnostics, Inc. v. Helena Labs. Corp., 859 F.2d 878 (Fed. Cir. 1988) 16

United States v. Adams, 383 U.S. 39 (1966) 15, 16

Yamanouchi Pharmaceutical Co., Ltd. v. Danbury Pharmacal, Inc., 231 F.3d 1339 (Fed. Cir. 2000) 14

Cited Authorities

Page

Federal Statutes:

28 U.S.C. § 1295(a)(1) 22

35 U.S.C. § 102(b) 23

35 U.S.C. § 103 ..... *passim*

35 U.S.C. § 103(a) 11

35 U.S.C. § 112 23

35 U.S.C. § 282 17

Miscellaneous:

Supreme Court Rule 10(a) 22, 23

Fed. Cir. R. 47.6 2

STATEMENT OF THE CASE

KSR's Petition for Writ of Certiorari attempts to present this simple infringement dispute between competitors in the automotive supplier industry as a case of major jurisprudential significance. Quite simply, it is not.

On November 18, 2002, Respondent Teleflex Inc.[1] sued Petitioner KSR International Co. ("KSR") for infringement of U.S. Patent No. 6,237,565 (the "'565 Patent"). The District Court granted KSR's motion for summary judgment on obviousness under Section 103 of the Patent Act, 35 U.S.C. § 103, in a published decision.

On appeal, the Federal Circuit Court vacated the District Court's decision and remanded the case for further proceedings on the issue of obviousness, for three principal reasons: (1) the District Court ignored the existence of genuine issues of material fact; (2) the District Court held that the expert affidavit proffered by KSR (the moving party) was more credible than the two affidavits proffered by Teleflex's experts; and (3) the District Court failed to evaluate the evidence using the correct standard for determining obviousness. The Federal Circuit Court did not make any de novo findings on whether the '565 Patent was obvious; it merely vacated the erroneous decision and remanded the case to the District Court for additional factual determinations.

This case is not an appropriate one for this Court to accept KSR's invitation to conduct a sweeping overhaul of

---

1. Respondent Teleflex Inc. was the original plaintiff in the District Court action. Respondent Teleflex Holding Co., a wholly-owned subsidiary of Teleflex Inc., was later added as a plaintiff (Respondents collectively referred to as "Teleflex").

the "well-settled law" of obviousness, established over the last twenty-five years, for at least three independent reasons.

First, this case does not present a significant interpretation or application of § 103 by the Federal Circuit Court. The record amply demonstrates that the District Court made basic evidentiary errors in granting summary judgment -- "weighing" the evidence, viewing conflicting expert affidavits in the light most favorable to the non-moving party, and generally accepting KSR's version of "the evidence" as undisputed. The Federal Circuit Court correctly determined that there were, in fact, disputes of material fact presented in the expert affidavits and other evidence, and that the District Court should not have granted summary judgment against Teleflex.

Second, this case is not ripe for review. The Federal Circuit Court did not determine whether the '565 Patent was obvious or not. Instead, the Federal Circuit Court merely remanded the case for further proceedings on obviousness, and, if necessary, infringement and damages.

Third, the Federal Circuit Court's decision to vacate the District Court's award of summary judgment and remand the case for further proceedings does not conflict with other relevant circuit court decisions. In 1982, Congress gave the Federal Circuit exclusive jurisdiction over complaints alleging, in whole or in part, claims arising under federal patent law. KSR does not cite to one post-1982 circuit court case that is in conflict with the Federal Circuit Court's decision in the instant case. Moreover, the decision by the Federal Circuit Court here is unreported and cannot be cited as precedent, so no "conflict" with respect to this case can exist. *See* Fed. Cir. R. 47.6.

A. The Product Involved In This Suit

The product at the center of this dispute is an adjustable pedal system combined with an electronic control. An adjustable pedal system is a vehicle pedal (accelerator, brake, or clutch) that can be adjusted by the driver to move the pedal closer to or farther from the driver – much like an adjustable seat moves the driver closer to or farther from the steering wheel. Jt. App. at 1461-1462.[2] Adjustable pedal systems allow a driver to attain maximum comfort while still sitting as far back from the steering wheel as possible to prevent air bag related injuries. Adjustable pedal systems have become a popular vehicle option because of their convenience and safety benefits. Jt. App. at 1462.

An electronic control that is used in conjunction with an accelerator pedal is known in the automotive industry as an electronic throttle control or "ETC." An ETC is connected to the accelerator pedal and uses a sensor to determine the movement of the pedal as applied by the driver. The ETC translates this movement into an electronic signal that is then sent electronically to the throttle. This electronic signal tells the throttle how much fuel and air to release into the engine. This fuel and air mixture, in turn, determines the engine output and subsequent speed of the vehicle. The ETC thus acts as a conduit between the accelerator pedal and the throttle. Jt. App. at 1557.

Teleflex is a leading manufacturer and supplier of adjustable foot pedal systems that are used by the automotive industry in motor vehicles. Jt. App. at 1461. Teleflex's

---

2. The Petition for a Writ of Certiorari is referred to as "Pet.", the Appendix to the Petition is referred to as "App.", and the Joint Appendix in the Federal Circuit is referred to as "Jt. App."

adjustable pedal systems can be found in the Ford Excursion, among others. KSR is also an automotive supplier and a competitor of Teleflex. KSR, too, manufactures and sells adjustable pedal systems. Jt. App. at 2. KSR's adjustable pedal systems can be found in various General Motors' pickup trucks and sport utility vehicles, among others.

B. The Prior Art In Effect When The Inventor Of The '565 Patent Invented The Teleflex Adjustable Pedal System With Fixed Electronic Controls

Prior to the 1990s, the automobile industry used fixed pedals with cable-actuated throttle control mechanisms. Jt. App. at 1470-1471. Subsequently, inventors replaced cables with electronic throttle controls on these fixed pedal assemblies. Jt. App. at 1471. These electronic controls were integrated with the fixed pedal itself, that is, attached directly to the pivot point of the pedal. The next significant invention in the pedal industry was adjustable pedal systems with cable-actuated throttle controls. The next invention was adjustable pedals with electronic controls. These adjustable pedals with electronic controls had the electronic control attached directly to the pedal, in the same manner that the electronic controls were attached to the fixed pedals. Jt. App. at 1470. In other words, the ETC moved with the pedal during the adjustment process, a so-called "mobile ETC."

However, as evidence submitted by Teleflex demonstrated, there was a major impediment to the manufacture and use of adjustable pedals utilizing ETCs. One critical disadvantage of the prior art mobile ETC was that it required a significant amount of space to permit both the ETC **and** the pedal to move in the area near the pedals. Jt. App. at 1471. (The area surrounding the pedals in a vehicle, called the footwell, is a compact and

tight space that is crowded as a result of the pedals vying with the surrounding system and other driver control devices for space in that area. Jt. App. at 1483-1485.) The prior art mobile ETC takes up more space as it moves through the footwell than would a corresponding adjustable pedal without an attached ETC. Thus, there was a significant known disadvantage with adjustable pedal systems coupled with an ETC given the inherent space and "packaging" constraints described above. This packaging problem confronted Teleflex during the development of an adjustable pedal with ETC for Ford's Excursion vehicle. Jt. App. at 1483-1485. Steve Engelgau, a Teleflex engineer, was given the task of solving the problem. Jt. App. at 1483-1485.

C. Invention Of The '565 Patent

Mr. Engelgau invented the design embodied in the '565 Patent which solved this critical footwell space concern. Under the '565 Patent, the ETC is attached to the **bracket** that mounts the pedal to the vehicle -- **not to the pedal itself**; this placement permits the pedal to be adjusted while the ETC remains stationary. Jt. App. at 1552-1559. The stationary ETC design set forth and claimed in the '565 Patent includes an adjustable pedal system having an ETC that is attached to the mounting bracket and in which the ETC remains fixed during fore and aft movement of the pedal. Jt. App. at 1559. Significantly, as of the date of conception of the '565 Patent in February 1998, no other ETC adjustable pedal system exhibited a stationary (non-mobile) ETC. Jt. App. at 1483-1485.

Counter to KSR's over-simplification of the invention of the '565 Patent, the claim at issue in this litigation (claim 4 of the '565 Patent) does not just claim an adjustable pedal

with an electronic control. Claim 4 requires a specific way to locate and mount the ETC on an adjustable pedal system. As one of Teleflex's experts opined, the invention of the '565 Patent was a simple, elegant and novel combination of features that would not have been obvious to one of ordinary skill in the art. Jt. App. at 1548.

Because the ETC is attached to the mounting bracket as opposed to the pedal arm itself, the pedal arm is more compact and thus can move within a narrower space. The fact that the pedal arm can move within a narrower space allows the vehicle manufacturer to devote more footwell space to other vehicle components. Jt. App. at 1483-1485. Thus, the independence of the pedal and ETC in the '565 Patent makes the design easier to package within vehicles, a significant invention and improvement over prior art.

D. The District Court Decision

On July 7, 2003, Teleflex filed a motion for summary judgment of infringement on the '565 Patent. On the same day, KSR filed a motion for summary judgment of invalidity, requesting in relevant part that the District Court declare the '565 Patent invalid under § 103 for obviousness.

In its obviousness challenge, KSR characterized the legal issue before the District Court as whether there was a *suggestion* in the prior art so that a person of ordinary skill in the art would have *desired* to combine the prior art:

> With regard to the '565 Patent, the legal question raised by this motion is whether, to a person of ordinary skill in the pedal design art as of January 26, 1998, it would have been obvious

> to combine (a) the adjustable pedal assembly of Asano [a prior pedal design], with (b) an off-the-shelf electronic pedal position sensor. . . . Under *well-settled law*, "when determining the patentability of a claimed invention which combines two known elements, 'the question is whether there is something in the prior art as a whole to suggest the desirability, and thus the obviousness, of making the combination.'" *Ecolochem, Inc. v. Southern Cal. Edison Co.*, 227 F.3d 1361, 1372 (Fed. Cir. 2000) (quoting *In re Beattie*, 974 F.2d 1309, 1311-12 (Fed. Cir. 1992) (quoting *Lindemann Maschinenfabrik GmbH v. American Hoist & Derrick Co.*, 730 F.2d 1452, 1462 (Fed. Cir. 1984))).
>
> The record here abounds with evidence suggesting the "desirability" of adding an electronic pedal position sensor to Asano at relevant times.

Brief for KSR, filed July 7, 2003, at 28-29 (emphasis added). KSR made several other references to the test for "obviousness" as including the "motivation" for combining prior art. Brief for KSR, filed July 7, 2003, at 29-30. Finally, KSR concluded that "evidence" suggesting that the '*motivations for combining* Asano with an electronic pedal sensor . . . are at least as clear and convincing as *motivations* that the Federal Circuit has found sufficient to invalidate patent claims under 35 U.S.C. § 103." Brief for KSR, filed July 7, 2003, at 30 (emphasis added).[3]

---

3. Of course, now that the KSR has lost its appeal, KSR has disparaged the "well-settled law" and discarded the motivation-based standard that it relied upon in the District Court and Federal Circuit Court proceedings.

A critical issue before the District Court was whether the Asano patent constituted relevant prior art. Petitioner acknowledged that "[t]he relevant art is defined by the nature of the problem confronting the would-be inventor." Brief for KSR, filed July 7, 2003, at 21. Teleflex submitted evidence from the inventor and from two experts that the Asano patent was not relevant prior art relative to the nature of the problem confronted by the inventor of the '565 Patent. *See, e.g.*, Jt. App. at 1551. The District Court reviewed the conflicting evidence and, nonetheless, ruled, as a matter of law, that the Asano patent was relevant prior art. The District Court next reviewed the conflicting evidence, and despite the fact that no other prior design or prior patent, disclosed, taught or even suggested an adjustable pedal coupled with an ETC that remained stationary during the adjustment process, the court found, as a matter of law, that the '565 Patent was obvious. App. at 39a.

E. The Federal Circuit Court Decision

Teleflex timely appealed the District Court decision. In opposing Teleflex's appeal, KSR argued that the District Court properly evaluated obviousness under § 103 because it applied the "teaching-suggestion-motivation" test:

> This Court's precedents hold that "when determining the patentability of a claimed invention which combines two known elements, 'the question is whether there is something in the prior art as a whole to suggest the desirability, and thus the obviousness of making the combination.'" *Ecolochem, Inc. v. Southern Cal. Edison Co.*, 227 F.3d 1361, 1372 (Fed. Cir. 2000) (*quoting In re Beattie*, 974 F.2d 1309, 1311-12 (Fed. Cir. 1992)

> (*quoting Lindemann Maschinenfabrik GmbH v. American Hoist & Derrick Co.*, 730 F.2d 1452, 1462 (Fed. Cir. 1984))).

Brief for KSR, filed April 30, 2004, at 27. Furthermore:

> The District Court thus appropriately analyzed the evidence of record to determine whether, as of January 26, 1998, the prior art included "some motivation or suggestion to combine the prior art teachings." 298 F. Supp. 2d at 593 (*quoting Al-Site Corp. v. VSI Int'l, Inc.*, 174 F.3d 1308, 1324 (1999)).

Brief for KSR, filed April 30, 2004, at 32. Finally, KSR hailed the District Court's decision in employing the "motivation or suggestion to combine" test on obviousness, which is the same test that KSR now asserts in its Petition as violating this Court's precedents and the Patent Act:

> In view of the foregoing, the District Court was well-justified in concluding, as a matter of law, that the prior art of record included "some motivation or suggestion to combine" Asano with a modular prior art pedal position sensor . . . .

Brief for KSR, filed April 30, 2004, at 37.

The Federal Circuit Court disagreed; the Federal Circuit Court held that the District Court erred by granting summary judgment in light of the fact that there were material issues of fact on obviousness. App. at 16a-17a. In addition, the Federal Circuit Court also held that the District Court made improper factual and credibility determinations with respect

to affidavits submitted by the parties' experts: the District Court erred as a matter of law because it credited KSR's expert declarant and discredited Teleflex's two expert declarants. App. at 16a. In addition, the Federal Circuit Court ruled that the District Court applied an incorrect obviousness test, and neglected to make specific factual findings relating to obviousness. App. at 16a. Accordingly, the Federal Circuit Court vacated the decision of the District Court and "remand[ed] the case for further proceedings on the issue of obviousness, and, if necessary, proceedings on the issues of infringement and damages." App. at 17a.

KSR timely filed this petition with the Court to review the Federal Circuit Court's determination that issues of material fact existed that precluded summary judgment.

REASONS FOR DENYING THE PETITION

For the following independent reasons, Teleflex respectfully submits that this Court should decline to review the Federal Circuit Court's decision to vacate the District Court's grant of summary judgment on obviousness.

A. The Federal Circuit Has Not Abandoned This Court's Precedent Or Section 103

Before turning to the central issue of whether the Federal Circuit Court made an error in determining that factual disputes existed in this case and that summary judgment was improper, Teleflex addresses KSR's assertions that "[t]he decision below is in direct conflict with this Court's precedents . . . and the text of § 103 itself." Pet. at 11. KSR is wrong. In this case, and in the other cases cited by KSR (several of which this Court has declined to review), the

Federal Circuit has explicitly addressed § 103 and followed the approach this Court set forth for applying that provision.

Section 103 provides, in pertinent part:

> A patent may not be obtained . . . if the differences between the subject matter sought to be patented and the prior art are such that the subject matter as a whole would have been obvious at the time the invention was made to a person having ordinary skill in the art to which said subject matter pertains.

35 U.S.C. § 103(a).

This Court held in *Graham v. John Deere Co.*, 383 U.S. 1 (1966):

> While the ultimate question of patent validity is one of law, . . . the § 103 condition, which is but one of three conditions, each of which must be satisfied, lends itself to several basic factual inquiries. Under § 103, the scope and content of the prior art are to be determined; differences between the prior art and the claims at issue are to be ascertained; and the level of ordinary skill in the pertinent art resolved. Against this background, the obviousness or nonobviousness of the subject matter is determined. Such secondary considerations as commercial success, long felt but unsolved needs, failure of others, etc., might be utilized to give light to the circumstances surrounding the origin of the subject matter sought to be patented. As indicia of obviousness or nonobviousness, these inquiries may have relevancy.

> This is not to say, however, that there will not be difficulties in applying the nonobviousness test. What is obvious is not a question upon which there is likely to be uniformity of thought in every given factual context.

383 U.S. at 17-18 (citations omitted).

The Court also instructed that the standard set forth in *Graham* would go beyond an inquiry of purely technical issues:

> These legal inferences or subtests do focus attention on economic and motivational rather than technical issues and are, therefore, more susceptible of judicial treatment than are the highly technical facts often present in patent litigation. . . . Such inquiries may lend a helping hand to the judiciary which, as Mr. Justice Frankfurter observed, is most ill-fitted to discharge the technological duties cast upon it by patent legislation. . . . They may also serve to "guard against slipping into use of hindsight," . . . and to resist the temptation to read into the prior art the teachings of the invention in issue.

383 U.S. at 35-36 (citations omitted).

Thus, under *Graham*, the obviousness inquiry is highly fact specific, and requires an examination of the following: (1) the scope and content of the prior art; (2) the differences between the patented invention and what already existed in the prior art; (3) the ordinary level of skill of people working in the field; and (4) other objective evidence which may

suggest that the invention would not have been obvious. The Court also warned lower courts to "'guard against slipping into use of hindsight,' . . . and to resist the temptation to read into the prior art the teachings of the invention in issue." 383 U.S. at 36. *See also Ashland Oil, Co. v. Delta Resins & Refractories, Inc.*, 776 F.2d 281, 291 (Fed. Cir. 1985), *cert. denied* 475 U.S. 1017 (1986).

This Court reaffirmed and relied upon the *Graham* fact-intensive test in its consideration and determination of obviousness in *Sakraida v. Ag Pro, Inc.*, 425 U.S. 273 (1976) and *Anderson's-Black Rock, Inc. v. Pavement Salvage Co.*, 396 U.S. 57 (1969). In *Sakraida*, the Court expressly cited *Graham* throughout its opinion and relied on the test to evaluate the obviousness of the claimed patent. 425 U.S. at 279-280. Likewise, in *Anderson's-Black Rock*, the Court referenced *Graham* as laying out the test for determining obviousness. 396 U.S. at 61-62. Under the fact situations in both cases, the Court examined whether the combination of "old elements" in prior art produced a "synergistic result."

KSR suggests that the test in *Graham*, which the Court relied upon in deciding *Sakraida* and *Anderson's-Black Rock*, should be cast aside in favor of, essentially, a one-prong "synergistic result" test. However, nowhere in the *Sakraida* or *Anderson's-Black Rock* decisions does this Court state that the "synergistic result" inquiry supersedes a finding of nonobviousness or obviousness under the oft-cited, multiple-prong *Graham* test. Indeed, after the Court issued decisions in *Sakraida* and *Anderson's-Black Rock*, it subsequently expressly endorsed *Graham* as relevant precedent for determining obviousness under § 103:

> The nonobviousness requirement extends the field of unpatentable material beyond that which is known to the public under § 102, to include that which could readily be deduced from publicly available material by a person of ordinary skill in the pertinent field of endeavor. *See Graham*, 383 U.S., at 15, 86 S. Ct., at 692.

Bonito Boats, Inc. v. Thunder Craft Boats, Inc., 489 U.S. 141, 150 (1989). Thus, Teleflex respectfully submits that this Court did not intend that *Sakraida* or *Anderson's-Black Rock* override the seminal case of *Graham* on obviousness.

Moreover, the Federal Circuit's so-called "teaching-suggestion-motivation" standard for obviousness is fully consistent with *Graham* and its progeny. Under that standard, there must be some motivation or suggestion to combine specific prior art in such a way as to arrive at the particular combination disclosed in the patent at issue. *See, e.g., Ecolochem, Inc. v. Southern California Edison Co.*, 227 F.3d 1361, 1372 (Fed. Cir. 2000), *cert. denied*, 532 U.S. 974 (2001)[4]; *Ashland Oil*, 776 F.2d at 293. Importantly, as *Graham* instructed, the injection of hindsight in evaluating obviousness must be avoided; the requirement of a suggestion to combine prior art prevents hindsight reconstruction by accused infringers who try to use the patent-in-suit as a guide through the maze of prior art references, combining the right references in the right way so as to achieve the result of the claims in suit. *See, e.g., Yamanouchi Pharmaceutical Co., Ltd. v. Danbury Pharmacal, Inc.*, 231 F.3d 1339, 1343 (Fed. Cir. 2000) ("the suggestion to combine requirement stands

4. Teleflex notes that this Court denied certiorari in *Ecolochem*. Indeed, as discussed below, the petition for a writ of certiorari in *Ecolochem* is virtually identical to KSR's Petition in this case.

as a critical safeguard against hindsight analysis and rote application of the legal test for obviousness."); *Ecolochem*, 227 F.3d at 1371-72 ("Combining prior art references without evidence of a suggestion, teaching, or motivation simply takes the inventor's disclosure as a blueprint for piecing together the prior art to defeat patentability -- the essence of hindsight.") (citations omitted); *Grain Processing Corp. v. American Maize-Products Co.*, 840 F.2d 902, 907 (Fed. Cir. 1988).

The Federal Circuit's decisions on obviousness, including the decision in the instant case, follow this Court's precedents on obviousness. In addition to following *Graham*, the Federal Circuit has followed this Court's decision in *United States v. Adams*, 383 U.S. 39 (1966). In *Adams*, as KSR notes in its Petition, the patented product (a battery) consisted of a combination of old elements that were well known in the prior art. 383 U.S. at 51. The Court, nonetheless, held that the patented battery was nonobvious. The Court held that "known disadvantages in old devices which would naturally discourage the search for new inventions may be taken into account in determining obviousness." 383 U.S. at 52. The Court also noted that "[i]f such a combination of [old battery elements] is novel, the issue is whether bringing them together as taught by Adams was obvious in the light of the prior art." 383 U.S. at 50. The Federal Circuit has followed the Court's holding in *Adams*. *See, e.g.*, *Kahn v. General Motors Corp.*, 135 F.3d 1472, 1479-80 (Fed. Cir. 1998), *cert. denied*, 525 U.S. 875 (1998) ("In determining obviousness, the invention must be considered as a whole."); *In re Gurley*, 27 F.3d 551, 553 (Fed. Cir. 1994) ("a reference will teach away if it suggests that the line of development flowing from the reference's disclosure is unlikely to be productive of the result sought by the applicant.") (citing to *Adams*, 383 U.S.

at 52); *McGinley v. Franklin Sports, Inc.*, 262 F.3d 1339, 1354 (Fed. Cir. 2001) ("If references taken in combination would produce a 'seemingly inoperative device,' we have held that such references teach away from their combination."); *Custom Accessories, Inc. v. Jeffrey-Allan Indus., Inc.*, 807 F.2d 955, 959 (Fed. Cir. 1986) (a patent will not be deemed invalid merely because it is made up of a "combination of old elements"); *SmithKline Diagnostics, Inc. v. Helena Labs. Corp.*, 859 F.2d 878, 887 (Fed. Cir. 1988) ("A finding that claims which combine several prior art references are invalid based merely upon the fact that those similar elements exist is 'contrary to statute and would defeat the congressional purpose in enacting Title 35.'"), quoting *Panduit Corp. v. Dennison Mfg. Co.*, 810 F.2d 1561, 1577 (1987), *cert. denied*, 481 U.S. 1052 (1987).

Finally, as discussed above, KSR's lower court briefs are replete with references to "motivation", "suggestion", and "desirability" to combine prior art as the proper test and as the "well-settled law" for determining obviousness. Although KSR firmly embraced the "motivation to combine" test in the District Court and Federal Circuit Court proceedings, KSR now argues that the standard it advanced to the lower courts is against this Court's precedents.

In conclusion, this Court has not repudiated *Graham*, *Adams*, and its progeny in favor of a single-factor "synergistic result" test for combination patents. *Graham* and *Adams* remain good law, and the Federal Circuit has followed those cases and the statutory mandate of § 103.

B. The Federal Circuit Did Not Err By Determining That Genuine Issues Of Material Fact Existed, Thereby Precluding Summary Judgment

The Federal Circuit reviews without deference to the district court's grant of summary judgment and draws all reasonable factual inferences in favor of the non-movant. As the Federal Circuit noted in *Beckson Marine, Inc. v. NFM, Inc.*, 292 F.3d 718, 722 (Fed. Cir. 2002), citing *Anderson v. Liberty Lobby, Inc.*, 477 U.S. 242, 255 (1986):

> This court decides for itself whether 'the pleadings, depositions, answers to interrogatories, and admissions on file, together with the affidavits, if any, show that there is no genuine issue as to any material fact and that the moving party is entitled to a judgment as a matter of law.' Fed.R.Civ.P. 56(c).

Beckson Marine, 292 F.3d at 722. Summary judgment is proper on obviousness "only when the underlying factual inquiries present no lingering genuine issues." *Beckson Marine*, 292 F.3d at 723.

Importantly, as the '565 Patent was issued by the United States Patent and Trademark Office, KSR bears the burden of proof on invalidity (in this case obviousness). *See* 35 U.S.C. § 282.[5] This burden of proof is not the standard "preponderance of the evidence" burden; rather, KSR was charged with proving invalidity by clear and convincing evidence. *Ashland Oil*, 776 F.2d at 292; *American Hoist &*

5. 35 U.S.C. § 282 provides in part, that "[a] patent shall be presumed valid. . . . The burden of establishing invalidity of a patent or any claim thereof shall rest on the party asserting such invalidity."

Derrick Co. v. Sowa & Sons, Inc., 725 F.2d 1350, 1359 (Fed. Cir. 1984), *cert. denied*, 469 U.S. 821 (1984). Clear and convincing evidence exists when the movant "place[s] in the mind of the ultimate fact finder an abiding conviction that the truth of its factual contentions are 'highly probable.'" *Colorado v. New Mexico*, 467 U.S. 310, 316 (1994).

The clear and convincing burden remains at all times on the party challenging the validity of the patent. *American Hoist*, 725 F.2d at 1360. Furthermore, "[a]lthough the ultimate determination of obviousness is a legal conclusion, 'the presence or absence of a motivation to combine references in an obviousness determination is a pure question of fact.'" *Medical Instrumentation and Diagnostics Corp. v. Elekta AB*, 344 F.3d 1205, 1220 (Fed. Cir. 2003), *cert. denied*, 541 U.S. 959 (2004) (citations omitted). *See also Panduit Corp.*, 810 F.2d at 1566, 1579.

The Federal Circuit Court used these standards in this case to review de novo the District Court's grant of summary judgment on obviousness. **None of these standards are controversial or call into question a compelling legal issue that this Court needs to review.**

Against these standards for review, the Federal Circuit Court determined that the District Court granted summary judgment in error as there were material issues of fact on obviousness. App. at 16a-17a. The Federal Circuit Court also held that the District Court impermissibly weighed the competing expert affidavits in favor of KSR. App. at 16a. In addition, the Federal Circuit Court ruled that the District Court applied an incorrect obviousness test, and, furthermore, that the District Court neglected to make specific factual findings relating to obviousness. App. at 16a. Based on these

District Court errors relating to the District Court's mistreatment of disputed facts at the summary judgment stage, the Federal Circuit Court vacated the decision of the District Court and "remand[ed] the case for further proceedings on the issue of obviousness, and, if necessary, proceedings on the issues of infringement and damages." App. at 17a.

In addition, the Federal Circuit Court also rightfully refused to accept the pivotal conclusions that the District Court drew from the industry and technical expert affidavits. The Federal Circuit Court held that "by crediting KSR's expert declarant and discrediting the two declarants offered by Teleflex, the district court erred as a matter of law." App. at 16a. The District Court's error was compounded as KSR's only expert affidavit was the arguably biased opinion from its chief engineer; Teleflex, on the other hand, provided two independent expert affidavits. App. at 14a-16a. The Federal Circuit Court succinctly and properly noted: "At the summary judgment stage of a proceeding, it is improper for a district court to make credibility determinations." App. at 16a.

Given the mandate that KSR had to prove by clear and convincing evidence that there were no genuine issues of material fact that the '565 Patent was obvious, and given the District Court's errors in handling and weighing the evidence, the Federal Circuit Court properly vacated the District Court's grant of summary judgment and remanded the case for further evidentiary proceedings on obviousness. The District Court should have found a question of fact. This Court need not review the fundamental decision by the Federal Circuit Court

to vacate the District Court's order granting summary judgment.[6]

C. The Court Has Consistently Declined To Review The Federal Circuit's Decisions On Obviousness

KSR's radical plea for this Court to reverse nearly twenty-five years of decisions by the Federal Circuit is far from novel. Since 1985, numerous parties have sought review of the same issues that KSR urges the Court to review in the instant Petition. **Significantly, the Court has not accepted one petition calling into question the Federal Circuit's interpretation of *Graham* or § 103.**

For example, in *Nickson Indus., Inc. v. Rol Mfg. Co.*, 765 F.2d 160 (Fed. Cir. 1985) (table), *cert. denied*, 474 U.S. 843 (1985), soon after the Federal Circuit obtained exclusive jurisdiction for patent appeals, a petitioner urged the Court to review the Federal Circuit Court's decision reversing a finding of invalidity on obviousness. The petition asserted that, as here, the Federal Circuit Court's decision conflicted with *Sakraida* and *Anderson's-Black Rock* and that the Federal Circuit "utilized too low of a threshold of patentability." *See* Petition for a Writ of Certiorari in *Rol Mfg. Co. v. Nickson Indus., Inc.*, 1985 WL 696236, at *6. Unlike the instant case, in *Rol Mfg.*, the petitioner claimed that the Federal Circuit Court had committed an arguably

6. Indeed, on remand, after further proceedings are conducted and additional evidence presented, the District Court (and possibly the Federal Circuit on appeal) may ultimately rule in favor of KSR and find that the '565 Patent is, in fact, obvious and thus invalid. It is also possible that the District Court could dispose of the instant case on remand on several independent grounds, such as non-infringement.

greater offense by engaging in its own fact finding on the issue of obviousness. *See* Petition for a Writ of Certiorari in *Rol Mfg. Co. v. Nickson Indus., Inc.*, 1985 WL 696236, at *10. This Court declined to review the case.[7]

In 2001, the Court was again asked to review the same issues presented in the instant petition, and the Court declined to do so. In *Ecolochem, Inc. v. Southern California Edison Co.*, 227 F.3d 1361 (Fed. Cir. 2000), *cert. denied*, 532 U.S. 974 (2001), the Federal Circuit reversed a district court ruling that a patent was obvious and thus invalid. The petitioner sought review from this Court on the basis that the Federal Circuit has "read into section 103 . . . the requirement that the challenger must prove . . . the existence of some 'suggestion, motivation, teaching or incentive' that would

7. The Court has consistently refused to review the Federal Circuit's decisions regarding obviousness. *See, e.g., Polaroid Corp. v. Eastman Kodak Co.*, 789 F.2d 1556 (Fed. Cir. 1986), *cert. denied*, 479 U.S. 850 (1986) (petition urged the Court to review Federal Circuit decisions on obviousness, which have purportedly "wrought a sea change in patent law", *see* Petition for a Writ of Certiorari in *Eastman Kodak Co. v. Polaroid Corp.*, 1986 WL 766988, at *2); *see also Medtronic, Inc. v. Daig Corp.*, 789 F.2d 903 (Fed. Cir. 1986), *cert. denied*, 479 U.S. 931 (1986) (petition sought review of Federal Circuit decisions on § 103, *see* Petition for a Writ of Certiorari in *Daig Corp. v. Medtronic, Inc.*, 1986 WL 767041); *see also Modine Mfg. Co. v. Allen Group, Inc.*, 917 F.2d 538 (Fed. Cir. 1990), *cert. denied*, 500 U.S. 918 (1991) (petitioner presented question for review "[w]hether the Federal Circuit . . . in this and other cases is systematically ignoring the plain language of 35 U.S.C. section 103", *see* Petition for a Writ of Certiorari in *Allen Group, Inc. v. Modine Mfg. Co.*, 1991 WL 11176960, at *1); *see also Langston v Southwestern Bell Telephone Co.*, 945 F.2d 416 (Fed. Cir. 1991), *cert. denied*, 503 U.S. 914 (1992) (petition sought review of Federal Circuit decisions on § 103, *see* Petition for a Writ of Certiorari in *Southwestern Bell Telephone Co. v. Langston*, 1992 WL 12074335).

have led one of ordinary skill in the art to combine or modify the prior art in the manner of the invention." *See* Petition for a Writ of Certiorari in *Southern California Edison Co. v. Ecolochem, Inc.*, 2001 WL 34124948, at *2. This Court declined to review that issue approximately four years ago -- and this issue is the identical issue now raised by KSR.

D. KSR's So-Called "Circuit Split" Is Overblown And Manufactured

KSR asserts that the Court should grant certiorari because of an "acknowledged circuit split" on interpreting § 103 of the Patent Act (Pet. at 20), in apparent reliance on Supreme Court Rule 10(a).

Simply put, there is no meaningful or relevant circuit court conflict on the precise substantive issues in this litigation. Nearly twenty-five years ago, in 1982, Congress vested the Federal Circuit with exclusive appellate jurisdiction over complaints involving, in whole or in part, claims involving federal patent law. 28 U.S.C. § 1295(a)(1); *Holmes Group, Inc. v. Vornado Air Circulation Systems, Inc.*, 525 U.S. 826 (2002). KSR does not provide any examples using any post-1982 decision from a circuit court other than the Federal Circuit that is in conflict with the Federal Circuit Court's decision in the instant case. Nor does KSR point to any pending cases in other courts of appeal that may create, in the future, a circuit court split. In sum, KSR's claims that there is a split among the circuits is not relevant to any pending proceeding, let alone the instant litigation.

KSR's claim that in *Allen Engineering Corp. v. Bartell Indus.*, 299 F.3d 1336 (Fed. Cir. 2002), the Federal Circuit acknowledged a circuit split, is misplaced.

First, in *Allen Engineering*, the Federal Circuit did not even cite to § 103; that case concerned claim construction under § 112 and the application of the on-sale bar under § 102(b). Second, the portion of the decision in *Allen Engineering* that KSR relies on to demonstrate a so-called "acknowledged" circuit split pertained to the Federal Circuit's admonishment of counsel of record for inaccurately stating the applicable law in post-trial briefs. 299 F.3d at 1356-57. There is no contested circuit split mentioned in *Allen Engineering*. KSR desperately misconstrues *Allen Engineering*, and in elevating the Federal Circuit's reprimand to the parties' counsel as an "acknowledged circuit split" concerning § 103, KSR has demonstrated its inability to meet the Court's standards for grant of a writ of certiorari under Supreme Court Rule 10(a).

CONCLUSION

Teleflex respectfully submits that KSR has not articulated a compelling reason to justify discretionary review by this Court. KSR's petition for a writ of certiorari should be denied.

Respectfully submitted,

RODGER D. YOUNG
Counsel of Record
STEVEN SUSSER
DAVID J. POIRIER
YOUNG & SUSSER, P.C.
26200 American Drive
Suite 305
Southfield, Michigan 48034
(248) 353-8620

Attorneys for Respondents

Supreme Court, U.S.
FILED
JUL 3 - 2005
OFFICE OF THE CLERK

No. 04-1350

IN THE

Supreme Court of the United States

KSR INTERNATIONAL CO.,

Petitioner,

—against—

TELEFLEX INC. and
TECHNOLOGY HOLDING CO.,

Respondents.

ON PETITION FOR A WRIT OF CERTIORARI TO THE UNITED STATES COURT OF APPEALS FOR THE FEDERAL CIRCUIT

REPLY BRIEF

JAMES W. DABNEY
Counsel of Record
FRIED FRANK HARRIS
SHRIVER & JACOBSON LLP
1 New York Plaza
New York, New York 10004
(212) 859-8000

Attorneys for Petitioner

JOHN F. DUFFY
3614 Quesada Street, N.W.
Washington, D.C. 20015

Of Counsel

July 8, 2005

195339

COUNSEL PRESS
(800) 274-3321 • (800) 359-6859

CORPORATE DISCLOSURE STATEMENT

Petitioner's corporate disclosure statement was set forth at page *ii* of its Petition for a Writ of Certiorari, and there are no amendments to that statement.

TABLE OF CONTENTS

	Page
Corporate Disclosure Statement	i
Table of Contents	ii
Table of Cited Authorities	iii
I. This Case Provides an Excellent Vehicle for Deciding the Question Presented.	3
II. A Circuit Split Exists.	6
III. The History of Certiorari Petitions Raising This Issue Provides a Reason to Grant This Petition.	7
IV. The Federal Circuit's Suggestion Test Conflicts With the Precedents of this Court.	10
Conclusion	10

TABLE OF CITED AUTHORITIES

Page

Cases:

Allen Eng'g Corp. v. Bartel Indus., Inc., 299 F.3d 1336 (Fed. Cir. 2002) 6, 8

Anderson's-Black Rock, Inc. v. Pavement Salvage Co., 396 U.S. 57 (1969) 5, 6, 10

Dann v. Johnson, 425 U.S. 219 (1976) 10

Festo Corp. v. Shoketsu Kinzoku Kogyo Kabushiki Co., 535 U.S. 722 (2002) 10

Graham v. John Deere Co., 383 U.S. 1 (1966) 5, 10

Holmes Group, Inc. v. Vornado Air Circulation Sys., Inc., 535 U.S. 826 (2002) 7

Illinois Tool Works Inc. v. Independent Ink, Inc., cert. granted, 73 U.S.L.W. 3733 (June 19, 2005) (No. 04-1329), *op. below*, 396 F.3d 1342 (Fed. Cir. 2005) .. 5, 10

J.E.M. Ag Supply, Inc. v. Pioneer Hi-Bred Int'l, Inc., 534 U.S. 124 (2001) 9, 10

McGinley v. Franklin Sports, Inc., 262 F.3d 1339 (Fed. Cir. 2002) 4

Merck KGaA v. Integra LifeSciences I Ltd., 125 S. Ct. 2372 (2005) 9

Pace v. DiGuglielmo, 125 S. Ct. 1807 (2005) 7

Pfaff v. Wells Elecs., Inc. 525 U.S. 55 (1998) 7, 9

Cited Authorities

Page

Sakraida v. Ag Pro, Inc., 425 U.S. 273 (1976) . 2, 5, 6, 9, 10

Shaw v. Delta Air Lines, 463 U.S. 85 (1983) 8

Southern Cal. Edison Co. v. Ecolochem, Inc., 2001 WL 34124948 (filed March 13, 2001) (No. 00-1426) .. 8, 9

Warner-Jenkinson Co. v. Hilton Davis C'.em. Co., 520 U.S. 17 (1997) 10

Statutes:

35 U.S.C. § 103 6

35 U.S.C. § 103(a) ..... *passim*

Other Authorities:

Martin J. Adelman, Randall R. Rader, John R. Thomas & Harold C. Wegner, *Cases and Materials on Patent Law* 345 (2d ed. 2003) 10

John F. Duffy, *The Festo Decision and the Return of the Supreme Court to the Bar of Patents*, 2002 S. Ct. Rev. 273 8

Samuel Estreicher and John E. Sexton, *A Managerial Theory Of The Supreme Court's Responsibilities: An Empirical Study*, 59 N.Y.U.L. Rev. 681 (1984) 8

Cited Authorities

Page

Federal Trade Commission, *To Promote Innovation: The Proper Balance of Competition and Patent Law and Policy*, chap. 4 (Oct. 2003)

Statement of Computer & Communications Industry Association on Patent Law Reform 3 (June 14, 2005) at http://ccianet.org/papers/senate_patent_testimony_june_2005.pdf 2

Five major U.S. corporations (Cisco Systems Inc., Microsoft Corp., Hallmark Cards, Inc., V.F. Corp., and Fortune Brands, Inc.) whose products range from network equipment to software to greeting cards to golf clubs to brassieres, and which collectively own thousands of patents, have all urged this Court to grant certiorari in this case, because: "the Federal Circuit's current interpretation of 35 U.S.C. § 103(a) hurts innovation by providing too lenient a standard for obtaining a patent." Corporate Br. at 3.

Twenty-four (24) law professors have similarly urged this Court to grant certiorari in this case, because: "This case provides the Court with an opportunity to overturn the Federal Circuit's much-criticized current approach to non-obviousness, which is at odds with the statutory language, inconsistent with this Court's precedent, and contrary to the goals of the patent system." Law Prof. Br. at 2.

A non-profit research and educational institution, The Progress and Freedom Foundation (PFF), has also urged this Court to grant certiorari in this case, because: "the Federal Circuit's over-lenient application of the criterion that an invention be nonobvious . . . establishes a one-way ratchet in favor of a patent grant. The resulting flood of trivial patents retards innovation and competition [and] undermines the legitimacy of the patent system as a whole." PFF Br. at 2-4.

The amici supporting Petitioner join a chorus of patent law scholars and casebook authors who view the Federal Circuit as having "repudiated", "ignored", "abolished", or "dismiss[ed]" this Court's precedents construing 35 U.S.C. § 103(a). KSR Pet. for Cert. at 18-20. Two recent studies by the Federal Trade Commission (2003) and the National Academies (2004) have similarly criticized the Federal Circuit's radical re-interpretation § 103(a) since 1982. *See id.* at 24-27.

All of the amici further note that this particular case is "an excellent vehicle" (Corporate Br. at 3, 16-17), "a particularly attractive vehicle" (PFF Br. at 17), and even "the perfect vehicle" (Law Prof. Br. at 18) for deciding whether the Federal Circuit has erred in holding that a claimed invention cannot be held 'obvious', and thus unpatentable under 35 U.S.C. § 103(a), in the absence of some proven "'teaching, suggestion, or motivation' that would have led a person of ordinary skill in the art to combine the relevant prior art teachings in the manner claimed." KSR Pet. for Cert. at i, 3, 9-11.

In opposing certiorari, Respondents make no mention of what they earlier called "the barriers that the Federal Circuit has erected to a finding of obviousness." KSR Pet. for Cert. at 7 (quoting Brief for Plaintiffs-Appellants filed March 8, 2004)). Respondents similarly ignore the views expressed by (a) the amici supporting Petitioner; (b) the patent law scholars and casebook authors cited by Petitioner (KSR Pet. for Cert. at 18-20); and (c) the 2003 FTC and 2004 National Academies studies cited by Petitioner (*id.* at 24-27), all of which roundly criticize the exceptionally low standard of patentability that has resulted from the Federal Circuit's refusal to accept or abide this Court's precedents construing § 103(a) including *Sakraida v. Ag Pro, Inc.*, 425 U.S. 273 (1976). *See* KSR Pet. for Cert. at 15-17. New sources of criticism of the Federal Circuit "teaching-suggestion-motivation test" continue to arise.[1]

---

1. On June 14, 2005, the Computer & Communications Industry Association – a major technology trade association – testified before the Senate Subcommittee on Intellectual Property that "erosion of the [obviousness] standard under the Federal Circuit has been documented in many scholarly articles" and that "we hope that U.S. Supreme Court will grant certiorari in KSR v. Teleflex to address the Federal Circuit's departure from the Supreme Court's standard." Statement of Computer & Communications Industry Association on Patent Law Reform 3 (June 14, 2005) at http://ccianet.org/papers/senate_patent_testimony_june_2005.pdf

Respondents devote the bulk of their Brief in Opposition to arguments that the Federal Circuit supposedly did not, in this case, render any "significant interpretation or application of § 103" (Resp. Br. at 2), but merely enforced procedural rules governing "the handling and weighing of evidence on summary judgment" (Resp. Br. at i, 1-2, 17-20). But in vacating the District Court's judgment in this case (App. at 16a-17a), the Federal Circuit here clearly, explicitly, and undeniably applied that court's highly controversial "teaching-suggestion-motivation test." App. at 8a. The legitimacy of the decision below depends entirely on the legitimacy of the Federal Circuit's "steady, deliberate, and unwise departure from this Court's precedents." PFF Br. at 4. *See* Law Prof Br. at 5 ("numerous commentators have observed the inconsistency between the Federal Circuit's test and Supreme Court precedent"); Corporate Br. at 9 ("the Federal Circuit has essentially ignored this Court's precedent construing and applying Section 103(a)").

I. This Case Provides an Excellent Vehicle for Deciding the Question Presented.

As previously described (KSR Pet. for Cert. at 9-11), the Federal Circuit below vacated the District Court's judgment on the basis that: "the district court did not apply the correct teaching-suggestion-motivation test." App. at 8a. To leave no doubt as to the basis of its decision, the panel summarized its holding at the end of the opinion: "the correct standard requires a court to make *specific findings* showing a teaching, suggestion, or motivation to combine prior art teachings in *the particular manner claimed* by the patent at issue." *Id.* at 16a (emphasis added).

The legal standard applied by the Federal Circuit in this case – with its requirement of "*specific* findings showing a teaching, suggestion, or motivation to combine prior art teachings in the *particular* manner claimed by the patent at issue" *id.* (emphasis added) – is precisely the "focal point

of current debate." Federal Trade Commission, *To Promote Innovation: The Proper Balance of Competition and Patent Law and Policy*, chap. 4, at 11 (Oct. 2003) ("FTC Report"). It is what the PTO Deputy Commissioner for Patent Examination Policy identified as so troubling - that the Federal Circuit was "insisting" on findings "connect[ing] the dots . . . very, very clearly." *Id.* It is what drew criticism from the FTC itself, which concluded that the Federal Circuit's rigid application of its suggestion test ignores the "common sense" ability to "connect[] some dots." *Id.* at 14. And it is precisely the point on which the Federal Circuit doctrine is in conflict with other circuit precedent and with the decisions of this Court.

Respondents are thus simply wrong in trying to characterize this case as merely one in which "the Federal Circuit determined that the District Court granted summary judgment in error as there were material issues of fact on obviousness." Resp. Br. at 18. In vacating the District Court's judgment in this case, Federal Circuit expressly held that Respondents' patent could not be held invalid under § 103(a) in the absence of "clear and convincing evidence" (App. at 14a n.4) supporting "*specific findings* showing a teaching, suggestion, or motivation to combine prior art teachings in *the particular manner claimed*." *Id.* at 16a (emphasis added). The Federal Circuit could demand such "evidence" and "specific findings" only because it was imposing its deeply flawed "teaching-suggestion-motivation test" as a condition for applying § 103(a) to claimed subject matter, in clear conflict with this Court's precedents and extensive regional circuit precedent. *See* KSR Pet. for Cert. at 12-20.[2]

2. Among the many difficulties with the legal standard applied below is the Federal Circuit's holding that a "*proven* 'teaching, suggestion, or motivation'" is a prerequisite to any claimed subject matter being held obvious under § 103(a). KSR Pet. for Cert. at i (emphasis added). According to the Federal Circuit, the invalidating legal effect of multiple prior art references is a question of "fact" that must be "proved" to the satisfaction of a fact finder, typically a jury. *E.g., McGinley v. Franklin Sports, Inc.*, 262 F.3d 1339, 1351 (Fed. Cir. 2002). Besides producing a "flood of trivial patents" (PFF Br. at 3), the Federal Circuit "teaching-suggestion-motivation test" erroneously "precludes (Cont'd)

Respondents also err in arguing that the case is "not ripe for review" because the Federal Circuit "did not determine whether the '565 patent was obvious or not." Resp. Br. at 2. As amici note, the importance of this case lies in the erroneous legal standard that the Federal Circuit clearly and unequivocally applied below. In such circumstances, certiorari to determine the correct legal standard is completely appropriate as exemplified by the most recent patent case in which certiorari was granted, *Illinois Tool Works Inc. v. Independent Ink, Inc., cert. granted*, 73 U.S.L.W. 3733 (June 19, 2005) (No. 04-1329), *op. below*, 396 F.3d 1342 (Fed. Cir. 2005).

In *Illinois Tool*, as in this case, the Federal Circuit reversed a district court's grant of summary judgment and ordered the case to be remanded for further fact-finding under a particular legal standard.[3] There, as here, the petitioner might possibly have prevailed on remand. There, as here, the petition for certiorari argued that the Federal Circuit's legal standard was incorrect, was in conflict with the law of other circuits, and had broad implications for the business community. There, as here, the petition was supported by multiple amicus briefs. The Court granted certiorari in that case; it should do the same here.

The appropriateness of certiorari in this case is also not diminished by Respondents' observation that, *in addition to* reliance on this Court's obviousness precedents in *Sakraida* and *Anderson's-Black* (Federal Circuit Brief for Defendant-Appellee

---

(Cont'd)

courts from exercising their authority to decide ultimate questions of patent validity." Corporate Br. at 4; *see* KSR Pet. for Cert. at 11, 28-29; *Graham v. John Deere Co.*, 383 U.S. 1, 17 (1966) ("the ultimate question of patent validity is one of law"). It also, and ironically, "defeats the objective of Congress in establishing the Federal Circuit to have it sit as an expert appellate court to decide patent law issues." Corporate Br. at 16.

3. The issue in *Illinois Tool* is whether a court should presume that a patent creates market power for purposes of Section 1 of the Sherman Act. The Federal Circuit held that market power should be presumed, and remanded the case to determine whether Illinois Tool could prove facts to overcome the presumption.

at 47-50; District Court Brief for KSR filed July 7, 2003, at 33-35, Jt. App. at 639-40), Petitioner *also* argued to both lower courts that Petitioner was entitled to prevail even under the Federal Circuit's extremely lax "teaching-suggestion-motivation test." Resp. Br. at 6-7 & n.5. Such arguments in the alternative are plainly permitted. Indeed, it would have been foolish for KSR to rely solely on Supreme Court precedents when the Federal Circuit has made it abundantly clear that it will not follow or even acknowledge the existence of those precedents – as the decision below well exemplifies.

Petitioner has also repeatedly recognized, both in this Court (KSR Pet. for Cert. at 3, 27-28) and in briefs filed below, that the "teaching-suggestion-motivation test" is "settled law" *in the Federal Circuit*. But as discussed in the Petition, the "settled" nature of this *circuit* law provides an additional reason to grant certiorari, because the Federal Circuit is not attempting to reconcile its law with the conflicting precedents of this Court and other circuit courts.

II. A Circuit Split Exists.

The Federal Circuit has, in its words, "specifically abrogated" what it called "a Fifth Circuit 'synergism' test for the patentability of combination inventions." *Allen Eng'g Corp. v. Bartel Indus., Inc.*, 299 F.3d 1336, 1356-57 (Fed. Cir. 2002). Respondents argue that *Allen Engineering* does not reflect any relevant circuit split, because the statement quoted above does not "cite to § 103." Resp. Br. at 23. But the "test for the patentability of combination inventions" referred to in *Allen Engineering*, 299 F.3d at 1356-57, is the same "test of validity of combination patents," *Sakraida*, 425 U.S. at 282 (quoting *Anderson's-Black*, 396 U.S. at 60), that this Court has repeatedly applied when determining if claimed subject matter is "obvious" for purposes of § 103, KSR Pet. for Cert. at 2 & n.2, 14-16, and that at least seven (7) regional circuits have similarly and consistently applied for many years. KSR Pet. for Cert. at 15 & n.5.

Respondents are also wrong in arguing that the existing, acknowledged circuit split is "irrelevant" because Congress

has centralized most patent jurisdiction in the Federal Circuit. Rep. Br. at 22. As earlier noted (KSR Pet. for Cert. at 23-24), this Court granted certiorari in *Pfaff v. Wells Elecs., Inc.* 525 U.S. 55 (1998), in part because the Federal Circuit in that case had diverged from how regional circuits had construed a section of the Patent Act prior to the Federal Circuit's creation in 1982. *Id.* at 60. That is exactly the case here. KSR Pet. for Cert. at 15 & n.5.

Similarly, in *Holmes Group, Inc. v. Vornado Air Circulation Sys., Inc.*, 535 U.S. 826 (2002), Justice Stevens voted to expand regional circuits' appellate jurisdiction to decide cases involving patent law counterclaims, in part because conflicts between Federal Circuit and regional circuit precedent "may be useful in identifying questions that merit this Court's attention." *Id.* at 839 (Stevens, J. concurring).

Respondents' assertion that "no 'conflict' with respect to this case can exist" because the Federal Circuit did not publish its opinion (Resp. Br. at 2) is also erroneous. The legal standard applied by the Federal Circuit below avowedly "conflicts" with other circuit precedent. The Court is not being asked to review merely one specific unpublished decision, but an erroneous "test" of patentability that the Federal Circuit has engrafted onto 35 U.S.C. § 103(a) and applied in hundreds of cases since the mid-1980's. *See* KSR Pet. for Cert. at 3. In past cases of unpublished opinions applying existing circuit precedent, this Court has not balked at granting certiorari. *See* KSR Pet. for Cert. at 9 n.4, 27-28 (citing such cases). *See also Pace v. DiGuglielmo*, 125 S. Ct. 1807, 1811 (2005).

III. The History of Certiorari Petitions Raising This Issue Provides a Reason to Grant This Petition.

Respondents accurately note that the basic issue raised in KSR's petition has been the subject of six prior petitions in the last two decades, although none filed since 2001. *See* Resp. Br. at 20-22 & n.7. This history supports granting, not denying, certiorari.

It is axiomatic that "denials of certiorari have no precedential force." *Shaw v. Delta Air Lines*, 463 U.S. 85, 94 n. 11 (1983). This Court frequently denies certiorari to allow further "percolation" of a legal issue in the lower courts. *See* Samuel Estreicher and John E. Sexton, *A Managerial Theory Of The Supreme Court's Responsibilities: An Empirical Study*, 59 N.Y.U.L. Rev. 681, 698-99 (1984). One important benefit to this "percolation" approach is that, if an issue is truly important and deserving of the Court's attention, the issue will return. The Court can then see that the issue is not going away, and this makes the case for certiorari stronger – as here. Further percolation also allows time for this Court to observe the practical effects of the lower court precedents. Here, the recent studies on patent reform by the FTC and the National Academies, the academic works cited by KSR and the amici, and the amici themselves will ensure that this Court will have good information about the practical effect of the Federal Circuit's re-interpretation of § 103(a) since 1982.

Five of the six petitions cited by Respondents were filed in the early years of the Federal Circuit's existence. This Court then granted certiorari in very few patent cases (five cases in the first twelve years), and all of those cases involved issues peripheral to core patent policy (e.g., appellate procedure, jurisdiction, etc.). *See* John F. Duffy, *The Festo Decision and the Return of the Supreme Court to the Bar of Patents*, 2002 S. Ct. Rev. 273, 297 & n.85. Allowing further percolation of patent issues during the Federal Circuit's early years was sensible, for it gave the new court time to develop a body of circuit law whose merits could be assessed with the benefit of practical experience in actual cases like this one.

The most recent of the certiorari petitions cited by Respondents was filed in 2001. *Southern Cal. Edison Co. v. Ecolochem, Inc.*, 2001 WL 34124948 (filed March 13, 2001) (No. 00-1426). Much has changed since then. It was not until 2002 that the Federal Circuit acknowledged, in its *Allen Engineering* decision, that its earlier precedent had somehow "abrogated" the long-established "test of validity

of combination patents," *Sakraida*, 425 U.S. at 282 (quoting *Anderson's-Black*, 396 U.S. at 60), that other circuits had faithfully applied and that this Court had developed and consistently applied in numerous cases spanning more than a century. KSR Pet. for Cert. at 2 & n.2, 15 & n.5. The FTC and National Academies did not release their studies on patent law reform, criticizing the Federal Circuit's radical re-interpretation of § 103(a), until 2003 and 2004, respectively. *Id.* at 24-27.

The 2001 petition in *Southern Cal.* also lacked any support from amici. By contrast, the Petition here is supported by an extraordinarily diverse group of corporate amici who, "[a]s large industrial manufacturers, developers and users of technology, . . . are vitally interested in the U.S. patent system and the maintenance of traditional limits on what qualifies as a patentable invention" (Corporate Br. at 3); by twenty-four (24) law professors "who teach and write about intellectual property" (Law Prof. Br. at 1) ; and a non-profit entity whose members are "strong supporters of property rights in intellectual creations." PFF Br. at 2. This outpouring of amici demonstrates beyond doubt the importance of the question presented by the Petition.

Finally, granting certiorari based on KSR's Petition and the amicus briefs already filed would be consistent with this Court's practice in other patent cases. Although it sometimes calls for the views of the Solicitor General (CVSG) prior to acting on a petition, the Court has not made a CVSG a prerequisite to obtaining certiorari in patent cases. In the past decade, the Court has granted certiorari in only two patent cases after a CVSG, *Merck KGaA v. Integra LifeSciences I Ltd.*, 125 S. Ct. 2372 (2005) and *J.E.M. Ag Supply, Inc. v. Pioneer Hi-Bred Int'l, Inc.*, 534 U.S. 124 (2001). One of those cases (*J.E.M.*) was granted over the SG's recommendation to deny.

The Court has been willing to grant certiorari without a CVSG, or against the SG's recommendation, in past patent cases having one or more of the following factors: a circuit split (*Pfaff*); multiple amici demonstrating the importance of

the issue (e.g., *Illinois Tool*; *Festo Corp. v. Shoketsu Kinzoku Kogyo Kabushiki Co.*, 535 U.S. 722 (2002)); a controversial issue of such fundamental importance to the patent system that this Court has developed a significant line of precedents on the issue (*J.E.M.*; *Warner-Jenkinson Co. v. Hilton Davis Chem. Co.*, 520 U.S. 17 (1997)); and statements by governmental agencies or officials calling into question the Federal Circuit's doctrine (*Illinois Tool*). All of those factors are present here.

IV. The Federal Circuit's Suggestion Test Conflicts With the Precedents of this Court.

Respondents spend six and half pages (Resp. Br. at 10-16) arguing that "the Federal Circuit's so-called 'teaching-suggestion-motivation' standard for obviousness is fully consistent with *Graham* and its progeny." *Id.* at 16. Respondents conspicuously fail, however, to cite so much as a single Federal Circuit decision that follows any of this Court's three most recent decisions construing and applying § 103(a), namely, *Anderson's-Black Rock, Inc. v. Pavement Salvage Co.*, 396 U.S. 57 (1969), *Dann v. Johnson*, 425 U.S. 219 (1976), and *Sakraida v. Ag Pro, Inc.*, 425 U.S. 273 (1976). The reason is clear: As noted in one of the leading patent law casebooks (which is co-authored by a sitting Federal Circuit judge), the Federal Circuit has "essentially repudiated" these controlling Supreme Court precedents construing § 103(a). KSR Pet. for Cert. at 19 (quoting Martin J. Adelman, Randall R. Rader, John R. Thomas & Harold C. Wegner, *Cases and Materials on Patent Law* 345 (2d ed. 2003)).

CONCLUSION

A writ of certiorari should issue to review the judgment of the Federal Circuit in this case.

Respectfully submitted,

JAMES W. DABNEY
Counsel of Record
FRIED FRANK HARRIS
SHRIVER & JACOBSON LLP
1 New York Plaza
New York, New York 10004
(212) 859-8000

Attorneys for Petitioner

JOHN F. DUFFY
3614 Quesada Street, N.W.
Washington, D.C. 20015

Of Counsel

(7)

FILED
MAY 25 2006
OFFICE OF THE CLERK
SUPREME COURT, U.S.

No. 04-1350

In the Supreme Court of the United States

KSR INTERNATIONAL CO., PETITIONER

v.

TELEFLEX INC., ET AL.

ON PETITION FOR A WRIT OF CERTIORARI TO THE UNITED STATES COURT OF APPEALS FOR THE FEDERAL CIRCUIT

BRIEF FOR THE UNITED STATES AS AMICUS CURIAE

PAUL D. CLEMENT
Solicitor General
Counsel of Record

PETER D. KEISLER
Assistant Attorney General

THOMAS G. HUNGAR
Deputy Solicitor General

JEFFREY P. MINEAR
Assistant to the Solicitor General

ANTHONY J. STEINMEYER
ANTHONY A. YANG
Attorneys

Department of Justice
Washington, D.C. 20530-0001
(202) 514-2217

JAMES A. TOUPIN
General Counsel

JOHN M. WHEALAN
Deputy General Counsel and Solicitor

LINDA M. ISACSON
WILLIAM G. JENKS
ROBERT J. MCMANUS
Associate Solicitors
United States Patent and Trademark Office
Alexandria, Va. 22313

QUESTION PRESENTED

Whether a claimed invention can be "obvious," and therefore unpatentable under 35 U.S.C. 103(a), without proof of some "teaching, suggestion, or motivation" to modify or combine the prior art in the manner claimed.

TABLE OF CONTENTS

Page

Statement 1
A. The Patent Act's requirement of nonobviousness ... 2
B. The subject matter at issue 4
C. The proceedings below 6
Discussion 9
A. The Federal Circuit's imposition of a teaching-suggestion-motivation test to determine whether a claimed invention would be obvious presents an important question of patent law that warrants this Court's review 10
B. The question presented has significant practical consequences and this case provides an appropriate vehicle for its resolution 16
Conclusion 20

TABLE OF AUTHORITIES

Cases:

Anderson's-Black Rock, Inc. v. *Pavement Salvage Co.*, 396 U.S. 57 (1969) 12, 17
Bonito Boats, Inc. v. *Thunder Craft Boats, Inc.*, 489 U.S. 141 (1989) 2, 3, 10, 17
City of Erie v. *Pap's A.M.*, 529 U.S. 277 (2000) 18
Dann v. *Johnston*, 425 U.S. 219 (1976) 10, 11, 12, 13
Dembiczak, In re, 175 F.3d 994 (Fed. Cir. 1999) 14, 14
FCC v. *National Citizens Comm. for Broad.*, 436 U.S. 775 (1978) 18
Federal Power Comm'n v. *Transcontinental Gas Pipe Line Corp.*, 365 U.S. 1 (1961) 18

Cases—Continued: Page

Graham v. *John Deere Co.*, 383 U.S. 1 (1996) ..... *passim*
Hotchkiss v. *Greenwood*, 52 U.S. (11 How.) 248 (1851) 3, 10
Kahn, In re, 441 F.3d 977 (Fed. Cir. 2006) 13
Kotzab, In re, 217 F.3d 1365 (Fed. Cir. 2000) 8, 14
Lee, In re, 277 F.3d 1338 (Fed. Cir. 2002) 14, 15
Pfaff v. *Wells Elecs., Inc.*, 525 U.S. 55 (1998) 10
Rouffet, In re, 149 F.3d 1350 (Fed. Cir. 1998) 14
Ruiz v. *A.B. Chance Co.*, 234 F.3d 654 (Fed. Cir. 2000) 15
Sakraida v. *Ag Pro, Inc.*, 425 U.S. 273 (1976) 12
United States v. *Adams*, 383 U.S. 39 (1966) 12, 13
Warner-Jenkinson Co. v. *Hilton Davis Chem. Co.*, 520 U.S. 17 (1997) 18
Winner Int'l Royalty Corp. v. *Wang*, 202 F.3d 1340 (Fed. Cir. 2000) 14

Constitution and statutes:

U.S. Const. Art. 1, § 8, Cl. 8 (Patent Clause) 2
Act of Apr. 10, 1790, ch. 7, 1 Stat. 109 2
Act of Feb. 21, 1793, ch. 11, 1 Stat. 318 2
Act of July 4, 1836, ch. 357, 5 Stat. 117 2
Act of Mar. 3, 1839, ch. 88, 5 Stat. 353 2
Act of July 8, 1870, ch. 230, 16 Stat. 198 2
Act of Aug. 5, 1939, ch. 451, 53 Stat. 1212 2
Act of July 19, 1952, ch. 950, 66 Stat. 792 (35 U.S.C. 1 *et seq.*) (Patent Act) 2
35 U.S.C. 100 *et seq.* 2

Statutes—Continued: Page

35 U.S.C. 101-103 2
35 U.S.C. 103(a) ..... *passim*

Miscellaneous:

Federal Trade Comm'n, *To Promote Innovation: The Proper Balance of Competition and Patent Law and Policy* (2003), *available at* <www.ftc.gov/os/2003/10/innovationrpt.pdf> 19
John R. Thomas, *Formalism at the Federal Circuit*, 52 Am. U. L. Rev. 771 (2002) 14

In the Supreme Court of the United States

No. 04-1350

KSR INTERNATIONAL CO., PETITIONER

v.

TELEFLEX INC., ET AL.

ON PETITION FOR A WRIT OF CERTIORARI TO THE UNITED STATES COURT OF APPEALS FOR THE FEDERAL CIRCUIT

BRIEF FOR THE UNITED STATES AS AMICUS CURIAE

This brief is submitted in response to the order of this Court inviting the Solicitor General to express the views of the United States. In the view of the United States, the petition for a writ of certiorari should be granted.

STATEMENT

Petitioner KSR International Co. is a Canadian company that markets foot-operated throttle controls—gas pedals—for passenger cars and light trucks. Pet. App. 20a. Respondents Teleflex Inc. and its subsidiary Technology Holding Co. sued KSR in the United States District Court for the Eastern District of Michigan for patent infringement, alleging that two of KSR's adjustable gas pedal systems literally infringe Claim 4 of their U.S. Patent No. 6,237,565 (the Engelgau patent). *Id.* at 1a-2a, 20a, 23a-24a. The district court granted KSR's motion for summary judgment, concluding that Claim 4 of the

Engelgau patent is obvious within the meaning of Section 103(a) of the Patent Act of 1952, 35 U.S.C. 103(a), and therefore invalid. See Pet. App. 18a-49a. The Federal Circuit vacated the grant of summary judgment, concluding that the district court incorrectly applied its "teaching-suggestion-motivation" test in determining that Claim 4 would have been obvious to a person of ordinary skill in the art. *Id.* at 1a-17a.

A. The Patent Act's Requirement Of Nonobviousness

The Patent Clause of the Constitution vests Congress with authority "[t]o promote the Progress of Science and useful Arts by securing for limited Times to * * * Inventors the exclusive Right to their * * * Discoveries." U.S. Const. Art. 1, § 8, Cl. 8. Congress has implemented the Patent Clause through statutory enactments, commonly known as the Patent Acts, that have set out the conditions for securing a patent and that strike "a careful balance between the need to promote innovation and the recognition that imitation and refinement through imitation are both necessary to invention itself and the very lifeblood of a competitive economy." *Bonito Boats, Inc.* v. *Thunder Craft Boats, Inc.*, 489 U.S. 141, 146 (1989).[1]

The Patent Act of 1952, as amended, provides the current law governing the issuance and validity of patents. See 35 U.S.C. 100 *et seq.* Sections 101 through 103 provide (35 U.S.C. 101-103), as a general matter, that "patentability is dependent upon three explicit conditions: novelty and utility as articulated in § 101 and § 102, and non-obviousness * * * , as set

---

[1] See, *e.g.*, Act of Apr. 10, 1790, ch. 7, 1 Stat. 109; Act of Feb. 21, 1793, ch. 11, 1 Stat. 318; Act of July 4, 1836, ch. 357, 5 Stat. 117; Act of Mar. 3, 1839, ch. 88, 5 Stat. 353; Act of July 8, 1870, ch. 230, 16 Stat. 198; Act of Aug. 5, 1939, ch. 451, 53 Stat. 1212; Act of July 19, 1952, ch. 950, 66 Stat. 792.

out in § 103." *Graham* v. *John Deere Co.*, 383 U.S. 1, 12 (1966); see *Bonito Boats*, 489 U.S. at 146-151, 156-157. Because "each of [these conditions] must be satisfied," only those new and useful inventions that would not have been "obvious" at the time of their discovery exhibit the "level of innovation necessary to sustain patentability." *Graham*, 383 U.S. at 4, 17.

Congress enacted Section 103(a) to codify the principle, which this Court first recognized in *Hotchkiss* v. *Greenwood*, 52 U.S. (11 How.) 248 (1851), that a new and useful device does not qualify for a patent unless it embodies a "degree of skill and ingenuity" beyond that of "an ordinary mechanic acquainted with the business." *Id.* at 267. See *Graham*, 383 U.S. at 11-18. Section 103(a) states that a claimed invention is not eligible for a patent

> if the differences between the subject matter sought to be patented and the prior art are such that the subject matter as a whole would have been obvious at the time the invention was made to a person having ordinary skill in the art.

35 U.S.C. 103(a). "The nonobviousness requirement extends the field of unpatentable material beyond that which is known to the public under § 102, to include that which could readily be deduced from publicly available material by a person of ordinary skill in the pertinent field of endeavor." *Bonito Boats*, 489 U.S. at 150 (citing *Graham*, 383 U.S. at 15).

The question of nonobviousness is ultimately one of law, but it turns on "several basic factual inquiries." *Graham*, 383 U.S. at 17. This Court has identified four such inquiries: (1) "the scope and content of the prior art"; (2) "differences between the prior art and the claims at issue"; (3) "the level of ordinary skill in the pertinent art"; and (4) "secondary consid-

erations," such as "commercial success," that might provide "indicia of obviousness or nonobviousness." *Id.* at 17-18.

B. The Subject Matter At Issue

The technology at issue in this case is relatively simple and its evolution is straightforward. Before the 1970s, the driver of an automobile typically controlled the vehicle's speed by pressing a foot-operated gas pedal, which was bolted at a fixed location within the footwell of the vehicle interior. The pedal would act as a lever, rotate around a pivot point, and pull a cable or mechanical linkage to actuate the engine throttle. See Pet. App. 20a-21a. In the 1970s, automobile manufacturers began offering adjustable pedal assemblies, designed to accommodate drivers of different heights, that enabled a driver to adjust the pedal position forward and backward within the footwell. *Id.* at 19a-20a; see C.A. App. 1568 (U.S. Patent No. 5,010,782, Col. 1, ll. 14-27 (Asano patent)).[2]

In the 1990s, automobile manufacturers sold increasing numbers of vehicles in the United States that employed

---

[2] The driver's adjustment of the pedal position could alter the mechanical "lever[age]" at the pedal pad, by changing the distance between the pad and the pedal pivot, and it could consequently require the driver to apply a different amount of force when operating the pedal. See C.A. App. 1568 (Asano patent, Col. 1, ll. 28-45). The 1989 Asano design addressed that problem by attaching the adjustable pedal assembly to a fixed pivot point located on a stationary bracket in the footwell. See *id.* at 1562, 1565-1567 (Asano patent, Fig. 5-8); Pet. App. 32a-33a. That design then utilized mechanical linkages to preserve a constant force ratio and counteract the effect of adjusting the distance between the pedal pad and pedal pivot. See C.A. App. 1568, 1570-1571 (Asano patent, Col. 1, ll. 48-65; Col. 2, ll. 15-23; Col. 8, l. 63 - Col. 9, l. 4); Pet. App. 12a-13a & n.3. Not all adjustable pedal assemblies seek to address that constant force problem. See, *e.g.*, C.A. App. 1490-1491 (U.S. Patent No. 5,632,183, Col. 1, ll. 35-38, 52-54, Col. 2, ll. 13-15, Col. 4, ll. 26-29 (Rixon '183 patent)).

computer-controlled engines and electronic throttle controls. See Pet. App. 21a, 41a. The manufacturers of gas pedal assemblies adapted their non-adjustable assemblies by attaching an electronic sensor to the pedal, in place of the mechanical linkage, to determine the pedal position and transmit a corresponding electronic signal to the throttle. See *id.* at 21a. The designs of that era reveal configurations for non-adjustable pedals, mounted on the wall of the footwell, in which the electronic pedal position sensor is actuated by the pedal pivot and is located on a stationary wall bracket to which the pedal and its pivot connect. See *id.* at 33a-35a.[3]

Respondents' Engelgau patent reveals an adjustable pedal apparatus that combines an adjustable gas pedal assembly with an electronic pedal position sensor. The electronic sensor, which measures the pedal position at the pivot, is attached to the support bracket that connects the pedal assembly to the wall of the footwell. Pet. App. 2a, 26a. The patent explains that the pedal assembly "can be any of various adjustable pedal assemblies" and the electronic pedal position sensor can be any such sensor "known in the art." C.A. App. 38-39 (Engelgau patent, Col. 2, ll. 54-56; Col. 3, ll. 22-24).

---

[3] U.S. Patent No. 5,385,068 (White patent) (C.A. App. 717-723) is illustrative. The White patent, which was filed in 1992, discloses a modular electronic pedal position sensor similar to a sensor later installed in certain 1994 Chevrolet pick-up trucks. That sensor, known as a CTS 503 Series position sensor, was designed to be mounted on the pedal pivot of a gas pedal and included a fitting that allowed the sensor to engage the pedal pivot shaft on different makes and models of vehicle gas pedal assemblies. See Pet. App. 32a, C.A. App. 1051-1053 (Willemsen Decl. paras. 12-19). The sensor was mounted on the pedal support bracket in Chevrolet trucks and determined the pedal's position from the movement of the pedal pivot shaft. *Id.* at 1052-1053, 1077 (Willemsen Decl. paras. 16-17, 19 & Exh. 8). See also, *e.g.*, U.S. Patent Nos. 4,958,607 (Lundberg patent), 5,233,882 (Byram patent), 5,241,936 (Byler patent) (C.A. App. 708-716), 5,887,488 (Riggle patent).

Claim 4, which is set out verbatim at Pet. App. 3a, describes an apparatus composed of: (1) a support mounted to the vehicle structure; (2) an adjustable pedal assembly with a pedal arm that moves fore and aft with respect to the support; (3) a pivot located on the support to which the pedal assembly is attached; and (4) an electronic pedal position sensor attached to the support. *Id.* at 3a, 25a-26a. Claim 4 further describes that the electronic pedal position sensor is responsive to the pivot, the position of which remains constant with pedal arm adjustments. *Id.* at 3a, 26a.

C. The Proceedings Below

KSR supplies a major automobile manufacturer with adjustable gas pedal assemblies for use with electronically controlled throttles in certain truck lines. Respondents, who compete with KSR, brought this suit alleging that KSR's pedal assemblies infringed three of respondents' patents. As a result of a series of motions and stipulations, the parties focused their dispute on whether KSR's pedal assemblies infringed Claim 4 of the Engelgau patent. The parties filed cross-motions for summary judgment, and the district court granted judgment for KSR on the ground that respondents' claimed invention would have been obvious to a person of ordinary skill in the art and that the Engelgau patent was therefore invalid. See Pet. App. 18a-24a.

The district court reached that conclusion based on the four-part inquiry that this Court set out in *Graham*, *supra*. See 383 U.S. at 17-18. It first determined that all of the elements of Claim 4 were revealed in the prior art because the Asano patent taught each element except Claim 4's reference to the use of an electronic pedal position sensor, which other prior art references taught. See Pet. App. 28a-35a. The district court then determined that a person of ordinary skill in the art would have had college training in mechanical engi-

neering and experience in the field of pedal assemblies. *Id.* at 35a-36a. The court next found that there was "little difference between the teachings of the prior art and claims of the patent-in-suit," and it further found that a person skilled in the art would readily "combine a pivotally mounted adjustable pedal assembly [the Asano patent] with an off-the-shelf modular pedal position sensor to solve the problem" that the Engelgau patent addressed. *Id.* at 39a, 44a. The court also evaluated, as a "secondary consideration," respondents' claim of commercial success, but the court concluded that the consideration was "insufficient to overcome [KSR's] clear and convincing evidence of obviousness." *Id.* at 48a.

In analyzing whether it would have been obvious to a person of ordinary skill to combine the Asano patent with an electronic pedal position sensor, the district court applied the Federal Circuit's "teaching-suggestion-motivation test." See Pet. App. 8a, 40a-46a. Under that test, a claimed invention that combined elements already present in the prior art would not have been obvious at the time of invention unless there was a teaching, suggestion, or motivation in the prior art that would have led a person of ordinary skill to combine the prior art references in the manner claimed. See *id.* at 40a-41a. The district court found that a person of ordinary skill would have been motivated to combine pre-existing adjustable pedal assemblies with co-existing electronic pedal position sensors and to avoid known problems with other pedal assemblies. *Id.* at 42a-43a. The court observed that the prior art references were closely related, others in the field had made similar combinations, and the patent examiner, who did not have the benefit of the Asano reference, had recognized similar combinations as obvious. *Id.* at 43a-46a.

The court of appeals reversed on the ground that the district court had incorrectly applied the teaching suggestion-motivation test. Pet. App. 1a-17a. The court of appeals stated

that its test required the district court to make factual findings showing the "specific understanding or principle within the knowledge of the skilled artisan that would have motivated one with no knowledge of [the] invention to make the combination" in "the particular manner claimed by claim 4 of the [Engelgau] patent." *Id.* at 11a-12a (quoting *In re Kotzab*, 217 F.3d 1365, 1371 (Fed. Cir. 2000)); see *id.* at 16a. In other words, the court of appeals ruled that the district court could not find the Engelgau patent invalid as obvious without "specific findings as to a suggestion or motivation to attach an electronic control to the support bracket of the Asano assembly." *Id.* at 12a.

The court of appeals concluded that the Asano patent failed to provide such motivation because it addressed "the constant pedal force problem" in adjustable pedal assemblies, see note 2, *supra*, whereas the Engelgau patent purported to disclose a "smaller, less complex, and less expensive electronic pedal assembly." Pet. App. 12a-13a. The court of appeals also stated that the prior art references that taught the importance of avoiding movement of the pedal position sensor's wiring in non-adjustable pedal assemblies likewise were insufficient because they did not address the problem of wire chafing in "an adjustable pedal assembly" and did "not necessarily go to the issue of motivation to attach the electronic control on the support bracket." *Id.* at 13a.

The court of appeals concluded that KSR's other evidence describing the prior use of electronic pedal position sensors failed "to make out a *prima facie* case of obviousness." Pet. App. 14a. The court acknowledged that the evidence demonstrated a motivation to combine an electronic pedal position sensor with an adjustable pedal assembly and showed that such a sensor "'could have been' mounted on the support bracket of a pedal assembly," but the court concluded that it failed to show a particular "motivation to attach the electronic

control to the support bracket." *Id.* at 14a-15a. The court of appeals accordingly concluded that genuine issues of material fact existed concerning "whether a person of ordinary skill in the art would have been motivated * * * to attach an electronic control to the support structure of the [Asano] pedal assembly." *Id.* at 16a-17a. It therefore vacated the district court's judgment and remanded the case "for further proceedings on the issue of obviousness, and, if necessary, proceedings on the issues of infringement and damages." *Id.* at 17a.

DISCUSSION

This Court's decision in *Graham* v. *John Deere Co.*, 383 U.S. 1 (1966), sets out a flexible framework for determining whether a claimed invention is nonobvious within the meaning of Section 103(a) of the Patent Act of 1952, 35 U.S.C. 103(a). That decision instructs the lower courts to determine the content of the prior art, identify the differences between the prior art and the inventor's claims, and then determine whether a person of ordinary skill in the field would have found the claimed invention obvious. The Federal Circuit has transformed one means of establishing obviousness under that framework—proof that the prior art provided a teaching, suggestion, or motivation for combining separate prior art references—into an inflexible requirement for determining obviousness. As this case demonstrates, the Federal Circuit's teaching-suggestion-motivation test extends patent protection to non-innovative combinations of familiar elements. The issue is important, because many patent applications rest on the combination of prior art references, and because extension of patent rights to obvious combinations of familiar elements retards, rather than advances, new discoveries. This case presents a sound vehicle for the Court to determine whether the Federal Circuit's teaching-suggestion-motivation

test should continue to serve as the exclusive means of establishing obviousness under Section 103(a).

A. The Federal Circuit's Imposition Of A Teaching-Suggestion-Motivation Test To Determine Whether A Claimed Invention Would Be Obvious Presents An Important Question Of Patent Law That Warrants This Court's Review

1. This Court has explained that "the patent system represents a carefully crafted bargain that encourages both the creation and public disclosure of new and useful advances in technology, in return for an exclusive monopoly for a limited period of time." *Pfaff* v. *Wells Elecs., Inc.*, 525 U.S. 55, 63 (1998) (citing *Bonito Boats, Inc.* v. *Thunder Craft Boats, Inc.*, 489 U.S. 141, 150-151 (1989)). That bargain's effectiveness in inducing creative effort and disclosure depends on "a backdrop of free competition in the exploitation of unpatented designs and innovations," and the nonobviousness requirement is essential in ensuring that "free exploitation of ideas will be the rule, to which the protection of a federal patent is the exception." *Bonito Boats*, 489 U.S. at 151. Section 103(a) embodies the understanding that "concepts within the public grasp, or those so obvious that they readily could be, are the tools of creation available for all." *Id.* at 156; see *Graham*, 383 U.S. at 6.

This Court observed in *Graham* that Section 103(a)'s nonobviousness requirement codifies a "functional approach," traceable to *Hotchkiss* v. *Greenwood*, 52 U.S. (11 How.) 248 (1851), for defining the "general level of innovation necessary to sustain patentability." See *Graham*, 383 U.S. at 3-4, 11-12. That approach proceeds from the perspective of a "hypothetical person" of ordinary skill in the relevant art, *Dann* v. *Johnston*, 425 U.S. 219, 229 (1976), and turns on whether the claimed invention "as a whole" would have been obvious at the

time in light of the "differences between the subject matter sought to be patented and the prior art." 35 U.S.C. 103(a).

The "ultimate question" of patent validity is a question of law, *Graham*, 383 U.S. at 17, but it rests on a judgment, informed by relevant facts, of whether the hypothetical person of ordinary skill in the art would have found the invention as a whole "obvious." Section 103(a) itself identifies three "central factors relevant to any inquiry into obviousness" (*Johnston*, 425 U.S. at 226): the scope and content of the prior art, the differences between the prior art and the claims at issue, and the level of ordinary skill in the pertinent art. See *Graham*, 383 U.S. at 17. Other "secondary considerations" —including a long-felt and unfulfilled need for the invention, the prior failures of others, and the commercial success of the invention—may also provide "indicia" supporting the legal conclusion of "obviousness or nonobviousness." *Id.* at 17-18, 35-36.

In specifying nonobviousness as a condition of patentability, Section 103(a) codifies the Court's historic approach to evaluating whether a claimed invention is sufficiently innovative to warrant a patent, *Graham*, 383 U.S. at 17, but it does not specify how courts should weigh the relevant factors in making the legal determination, in any particular case, of whether an invention as a whole would have been "obvious." While the Court identified in its *Graham* decision the framework for analysis and the relevant considerations, it observed that the application of Section 103(a) would continue to depend on the "given factual context," that the inquiry is comparable to that involving similar fact-dependant legal judgments such as "negligence and scienter," and that further refinements "should be amenable to a case-by-case development." *Id.* at 18.

This Court's decisions from *Graham* forward reflect the understanding that courts must apply Section 103(a) "realisti-

cally" as a "practical test of patentability." See 383 U.S. at 17. The Court has accordingly declined to embrace rigid categorical rules that would inflexibly limit the ability of the courts or the United States Patent and Trademark Office (PTO) —which has "the primary responsibility for sifting out unpatentable material" (*id.* at 18)—to make individualized determinations of obviousness. In none of its decisions has the Court adopted the inflexible rule, which the Federal Circuit applied in this case and has consistently articulated in other decisions, that a court or PTO cannot conclude that a claimed invention would have been obvious unless it makes "specific findings showing a teaching, suggestion, or motivation to combine prior art in the particular manner claimed by the patent at issue" (Pet. App. 16a).[4]

2. The Federal Circuit's teaching-suggestion-motivation test subjects persons challenging the validity of a patent, as well as PTO's patent examiners, to substantial obstacles in establishing obviousness beyond those that Section 103(a) and this Court's decisions prescribe. As this case aptly demonstrates, the Federal Circuit's rigorous and inflexible application of its test alters *Graham*'s functional approach to the nonobviousness inquiry in a way that unnecessarily sustains patents that would otherwise be subject to invalidation as obvious.

---

[4] See *Sakraida* v. *Ag Pro, Inc.*, 425 U.S. 273, 280-282 (1976) (ruling that a claimed invention of a method for cleaning dairy barns was obvious); *Johnston*, 425 U.S. at 226-230 (ruling that a claimed invention of a computer program for managing bank accounts was obvious); *Anderson's-Black Rock, Inc.* v. *Pavement Salvage Co.*, 396 U.S. 57, 61-63 (1969) (ruling that a claimed invention of a paving machine was obvious); *United States* v. *Adams*, 383 U.S. 39, 48-52 (1966) (ruling that the claimed invention of a new type of battery was not obvious); *Graham*, 383 U.S. at 24-26, 32-37 (ruling, in two consolidated cases, that a claimed invention of a plow improvement and a claimed invention of a container cap were obvious).

The Federal Circuit's test departs from this Court's precedents because it treats a particular method of demonstrating obviousness—namely, proof that the prior art taught, suggested, or provided a motivation for combining the prior art references—as the *exclusive* means of showing obviousness. As the court of appeals stated in this case,

> When obviousness is based on teaching of multiple prior art references, the movant *must* also establish some "suggestion, teaching, or motivation" that would have led a person of ordinary skill to combine the relevant prior art teachings *in the manner claimed.*

Pet. App. 6a (citations omitted; emphasis added). See *id.* at 7a, 11a-12a. While this Court's flexible approach allows ample room to rely on such teachings, suggestions, or motivations as a sufficient basis for a finding of obviousness, see *United States* v. *Adams*, 383 U.S. 39, 47 (1966), the Federal Circuit's test mandates that showing as a prerequisite to an obviousness determination in any case involving a novel combination of previously known elements. See Pet. App. at 12a ("the district court was *required* to make *specific findings* as to whether there was a suggestion or motivation to combine the teachings of Asano with an electronic control *in the particular manner claimed* by claim 4" (emphasis added)).[5]

---

[5] After the Court called for the views of the United States, the Federal Circuit stated that its teaching-suggestion-motivation test "is consistent with governing obviousness law," citing Section 103(a) and this Court's decisions in *Johnston* and *Graham*. See *In re Kahn*, 441 F.3d 977, 987 (2006). But the *Kahn* decision does not acknowledge the key difference: This Court's decisions nowhere suggest that a court *must* make the *specific findings* that the Federal Circuit requires. To the contrary, this Court has found that a claimed invention would have been obvious based on the small difference between the prior art and what the inventor claimed, without any mention of teaching, suggestion, or motivation. See *Johnston*, 425 U.S. at 230.

The Federal Circuit's test creates a substantial obstacle to showing that a claimed invention that simply combines known features without substantial innovation would have been obvious, because the test requires the party challenging the patent to come forward with affirmative evidence in the prior art of a teaching, suggestion, or motivation to combine the features. See, *e.g.*, *In re Kotzab*, 217 F.3d 1365, 1370-1371 (Fed. Cir. 2000); *Winner Int'l Royalty Corp.* v. *Wang*, 202 F.3d 1340, 1348-1349 (Fed. Cir. 2000); *In re Rouffet*, 149 F.3d 1350, 1357 (Fed. Cir. 1998). That showing may be difficult or impossible even though the combination, on its face, would have been obvious. For example, such affirmative evidence may be lacking if the claim arose in a newly emerging technical field or if the combination was so obvious to persons skilled in the art that no one would have had need or incentive to record the trivial extension of the art. See John R. Thomas, *Formalism at the Federal Circuit*, 52 Am. U. L. Rev. 771, 801-802 (2003).[6]

The Federal Circuit states that the teaching, suggestion or motivation

> may be found explicitly or implicitly: 1) in the prior art references themselves; 2) in the knowledge of those of ordinary skill in the art that certain references, or disclo-

---

[6] Indeed, the Federal Circuit's approach has led it to hold that "'[c]ommon knowledge and common sense,' even if assumed to derive from the [PTO's] expertise, do not substitute" for evidence of a "specific hint or suggestion" to combine prior art. See *In re Lee*, 277 F.3d 1338, 1344-1345 (2002). Thus, even when prior art is closely analogous to the invention at issue, the court has required evidence showing a particular suggestion or motivation to combine the prior art to create the invention. See *In re Dembiczak*, 175 F.3d 994, 997, 1000 (Fed. Cir. 1999) (lawn trash bag having a Halloween pumpkin design is not prima facie obvious in the absence of evidence of suggestion to combine normal trash bag with references describing pumpkin designs on paper bags).

> sures in those references, are of special interest or importance in the field; or 3) from the nature of the problem to be solved, "leading inventors to look to references relating to possible solutions to that problem."

Pet. App. 6a (citations omitted). The court's seemingly helpful observation that the teaching, suggestion, or motivation may be found "explicitly or implicitly" has not, in practice, substantially reduced the burden that its test imposes. This case is illustrative. The district court found that the Asano patent revealed all of the elements of Claim 4 of the Engelgau patent except the mounting of a pivot-actuated electronic sensor on the adjustable pedal assembly support structure, and that other manufacturers had mounted such sensors on non-adjustable pedal assembly support structures. See *id.* at 42a-44a. The court of appeals nevertheless concluded that a mechanical engineer with experience in pedal assembly faced with the problem of mounting an electronic sensor on an adjustable pedal assembly would not be implicitly motivated to transfer the known technique for mounting the electronic sensor on the support structure of non-adjustable assemblies to adjustable assemblies. See *id.* at 11a-13a; see also 13a-15a (rejecting the district court's alternative bases for finding a teaching, suggestion, or motivation to combine the elements).[7]

The Federal Circuit justifies its rigid teaching-suggestion-motivation test as a necessary measure to eliminate the possibility of "hindsight-based obviousness analysis." Pet. App. 6a-7a (quoting *In re Dembiczak*, 175 F.3d 994, 999 (Fed. Cir. 1999)); see *Ruiz* v. *A.B. Chance Co.*, 234 F.3d 654, 665 (Fed.

---

[7] See generally *In re Lee*, 277 F.3d at 1343 (requiring "objective evidence" of a particular "teaching, motivation, or suggestion to select and combine the [prior art] references"); *In re Dembiczak*, 175 F.3d at 999 (requiring "actual evidence" revealing a "clear and particular" reason to select and combine the elements as combined in the invention).

Cir. 2000). While an inquiry into teaching, suggestion, or motivation may shed light on the question of obviousness, this Court did not perceive a need in *Graham* or subsequent cases to employ such a rigid prophylactic test to prevent courts or patent examiners from "read[ing] into the prior art the teachings of the invention in issue." *Graham*, 383 U.S. at 36. The Federal Circuit's test effectively constricts this Court's guidance in *Graham* respecting the nonobviousness inquiry, it fails to account adequately for the problem-solving abilities of persons of ordinary skill in the art, and it underestimates the capabilities of courts and patent examiners to "resist the temptation" of hindsight and to consider fairly the question of obviousness. See *ibid.* Moreover, if there is a need for the Federal Circuit's strict measures to guard against the possibility of hindsight, this Court should make that decision itself.

B. The Question Presented Has Significant Practical Consequences And This Case Provides An Appropriate Vehicle For Its Resolution

1. The Federal Circuit's adoption and strict application of its teaching-suggestion-motivation test presents an issue of substantial and ongoing practical importance. As this case illustrates, the test renders patent examination and litigation more costly, it grants patent applicants unjustified rewards for disclosing non-innovative subject matter, and it forecloses competitors from using the public storehouse of knowledge that should be freely available to all.

The interlocutory posture of this case does not counsel against review, because further proceedings on remand are themselves a product of the Federal Circuit's rigid rule. The Federal Circuit's decision to vacate the district court's grant of summary judgment will require additional proceedings to determine whether Claim 4 of the Engelgau patent would have been obvious. The district court will be required to hold

a trial to determine, among other things, "whether a person of ordinary skill in the art would have been motivated, at the time the invention was made, to attach an electronic control to the support structure of the pedal assembly disclosed by the Asano patent." Pet. App. 16a-17a. Those costly proceedings are unnecessary. The district court convincingly explained that the combination of known elements would have been obvious to a mechanical engineer confronted with the task of developing an electronically controlled adjustable pedal. *Id.* at 40a-46a. The claimed invention here is at least as obvious as the inventions in *Graham*, see 383 U.S. at 24-26, 32-37, and *Anderson's-Black Rock, Inc.* v. *Pavement Salvage Co.*, 396 U.S. 57, 60-63 (1969). The Federal Circuit's test nevertheless prevents summary resolution of the issue, potentially grants respondents an undeserved windfall, and prevents a competitor from employing what should be "tools of creation available to all." *Bonito Boats*, 489 U.S. at 156.

The Federal Circuit's test not only shunts cases to trial that should be resolved at summary judgment, but it also unduly restricts the ability of PTO to reject obvious patent applications. Congress vested PTO with "primary responsibility for sifting out unpatentable material." *Graham*, 383 U.S. at 18. That responsibility, which requires technical expertise drawn from a wide variety of disciplines, places extraordinary burdens on patent examiners, particularly in light of the high volume of patent applications. In fiscal year 2005 alone, PTO received more than 400,000 patent applications. Section 103(a) plays a crucial role in filtering out non-innovative applications and focusing the examination efforts on substantial claims. When PTO applies its technical expertise and reasonably articulates why a patent claim is obvious under Section 103(a), that determination is entitled to deference reflecting "the primacy of the PTO in ensuring that the claims allowed cover only subject matter that is properly patentable."

Warner-Jenkinson Co. v. *Hilton Davis Chem. Co.*, 520 U.S. 17, 33-34 (1997). PTO's obviousness inquiry should not require an unnecessary search for evidence showing a particular suggestion, teaching, or motivation to make insubstantially innovative combinations of elements that are known in the prior art. PTO should instead be allowed to bring to bear its full expertise—including its reckoning of the basic knowledge and common sense possessed by persons in particular fields of endeavor—when making the predictive judgment whether an invention would have been obvious to a person of ordinary skill in the art.[8]

2. Respondents contend (Br. in Opp. 2, 17-19) that this case merely involves a routine application of summary judgment standards that does not warrant this Court's review. To the contrary, the case presents an important and recurring issue of basic importance in the field of patent law. The Federal Circuit's longstanding teaching-suggestion-motivation test has a substantial impact on commercial enterprise and innovation. See Cisco Systems Amicus Br. It also has been the subject of critical scholarly commentary. See Intellectual Property Law Professors Amicus Br. The Federal Trade Commission's comprehensive report on the United States patent system noted the controversy surrounding the teaching-suggestion-motivation test, describing it as "a core issue in assessing obviousness and a focal point of current

---

[8] Cf. *City of Erie* v. *Pap's A.M.*, 529 U.S. 277, 298 (2000) (opinion of O'Connor, J.) (agency may take official notice of facts within its special knowledge and is not confined to the evidence in the record in reaching its expert judgment if party has opportunity to respond); *FCC* v. *National Citizens Comm. for Broad.*, 436 U.S. 775, 813-814 (1978) (agency's predictive judgment forecasting "the direction in which future public interest lies necessarily involves deductions based on the expert knowledge of the agency" (quoting *Federal Power Comm'n* v. *Transcontinental Gas Pipe Line Corp.*, 365 U.S. 1, 29 (1961))).

debate." See Federal Trade Comm'n, *To Promote Innovation: The Proper Balance of Competition and Patent Law and Policy*, ch. 4, at 9-15 (2003), *available at* <www.ftc.gov/os/2003/10/innovationrpt.pdf>.

This case presents a sound vehicle for examining the merits of the Federal Circuit's test. The court of appeals squarely ruled that KSR's undisputed evidence at the summary judgment stage of the proceedings did not establish a prima facie case of obviousness under its established precedents requiring proof of a teaching, suggestion, or motivation to combine. Pet. App. 14a-15a. Respondents contested KSR's assertion that the claimed invention would be obvious to one of ordinary skill in the art, but they did not dispute the core factual record relevant to this Court's review of the court of appeals' test. See C.A. App. 1547 (Radcliffe Decl. paras. 14-16), 1550 (Andresen Decl. paras. 5-7). KSR has properly preserved its challenge to the court of appeals' teaching-suggestion-motivation test by urging in the proceedings below that this Court's decisions provided an alternative basis for affirmance. See Pet. C.A. Br. 47-50. This case accordingly presents no procedural impediments to this Court's review.

CONCLUSION

The petition for a writ of certiorari should be granted.

Respectfully submitted.

PAUL D. CLEMENT
Solicitor General
PETER D. KEISLER
Assistant Attorney General
THOMAS G. HUNGAR
Deputy Solicitor General
JEFFREY P. MINEAR
Assistant to the Solicitor General
ANTHONY J. STEINMEYER
ANTHONY A. YANG
Attorneys

JAMES A. TOUPIN
General Counsel
JOHN M. WHEALAN
Deputy General Counsel and Solicitor
LINDA M. ISACSON
WILLIAM G. JENKS
ROBERT J. MCMANUS
Associate Solicitors
United States Patent and Trademark Office

MAY 2006

MOTION FILED
JUN 2 2 2005

No. 04-1350

IN THE

Supreme Court of the United States

KSR INTERNATIONAL CO.,
Petitioner,

v.

TELEFLEX INC. and TECHNOLOGY HOLDING CO.,
Respondents.

On Petition for Writ of Certiorari to the United States Court of Appeals for the Federal Circuit

MOTION FOR LEAVE TO FILE *AMICUS CURIAE* BRIEF AND BRIEF OF CISCO SYSTEMS INC., MICROSOFT CORP., HALLMARK CARDS, INCORPORATED, V.F. CORPORATION, AND FORTUNE BRANDS INC. AS *AMICI CURIAE* IN SUPPORT OF PETITIONER

PETER A. SULLIVAN *
HUGHES HUBBARD & REED LLP
One Battery Park Plaza
New York, New York 10004
(212) 837-6000

Counsel for Cisco Systems Inc., Microsoft Corp., Hallmark Cards, Incorporated, V.F. Corporation, and Fortune Brands Inc.

* Counsel of Record

WILSON-EPES PRINTING CO., INC. – (202) 789-0096 – WASHINGTON, D. C. 20001

IN THE

Supreme Court of the United States

KSR INTERNATIONAL CO.,
Petitioner,

v.

TELEFLEX INC. and TECHNOLOGY HOLDING CO.,
Respondents.

On Petition for Writ of Certiorari to the United States Court of Appeals for the Federal Circuit

MOTION FOR LEAVE TO FILE BRIEF OF CISCO SYSTEMS INC., MICROSOFT CORP., HALLMARK CARDS, INCORPORATED, V.F. CORPORATION, AND FORTUNE BRANDS INC. AS *AMICI CURIAE* IN SUPPORT OF PETITIONER

Pursuant to Rule 37.3(b) of the Rules of the Supreme Court of the United States, Cisco Systems Inc., Microsoft Corp., Hallmark Cards, Incorporated, V.F. Corporation and Fortune Brands Inc. hereby request leave to file the accompanying *amicus curiae* brief. This brief is submitted in support of the petition for writ of certiorari to the Court of Appeals for the Federal Circuit. Petitioner KSR International Co. has consented to the filing of this brief. Respondents Teleflex Inc. and Technology Holding Co. have not consented.

As set forth in the accompanying brief, Cisco Systems Inc., Microsoft Corp., Hallmark Cards, Incorporated, V.F. Corporation, and Fortune Brands Inc. are affected by patent laws and have a deep interest in their proper interpretation and application.

Cisco Systems Inc., Microsoft Corp., Hallmark Cards, Incorporated, V.F. Corporation and Fortune Brands Inc. are greatly concerned that the Federal Circuit's incorrect interpretation of the obviousness standard of Section 103(a) of the Patent Act, 35 U.S.C. § 103(a) (2001), results in unnecessary grants of patent rights on obvious extensions of existing technologies, which in turn unnecessarily increase costs to the public for products. Accordingly, Cisco Systems Inc., Microsoft Corp., Hallmark Cards, Incorporated, V.F. Corporation and Fortune Brands Inc. respectfully request leave to file the accompanying *amicus curiae* brief.

Respectfully submitted,

PETER A. SULLIVAN *
HUGHES HUBBARD & REED LLP
One Battery Park Plaza
New York, New York 10004
(212) 837-6000

Counsel for Cisco Systems Inc., Microsoft Corp., Hallmark Cards, Incorporated, V.F. Corporation, and Fortune Brands Inc.

* Counsel of Record

TABLE OF CONTENTS

	Page
TABLE OF AUTHORITIES	ii
INTEREST OF THE *AMICI CURIAE*	1
REASONS FOR GRANTING THE PETITION	3
I. THE FEDERAL CIRCUIT'S CURRENT TEST FOR OBVIOUSNESS HURTS INNOVATION	3
II. THE FEDERAL CIRCUIT'S CURRENT TEST IGNORES THE PRECEDENT OF THIS COURT	9
III. THE MOTIVATION TEST INVADES THE PROVINCE OF THE COURT TO DETERMINE THE ULTIMATE ISSUE OF OBVIOUSNESS	14
IV. IT IS APPROPRIATE TO DECIDE THESE ISSUES NOW AND THIS CASE IS AN APPROPRIATE VEHICLE IN WHICH TO ADDRESS THEM	16
CONCLUSION	17

TABLE OF AUTHORITIES

CASES — Page

Anderson's-Black Rock v. Pavement Salvage Co., 396 U.S. 57 (1969) 14
Dann v. Johnston, 425 U.S. 219 (1976) 11
In re Dembiczak, 175 F.3d 994 (Fed. Cir. 1999).... 13
Dow Chem. Co. v. Halliburton Oil Well Cementing Co., 324 U.S. 320 (1945)..... 12
In re Gartside, 203 F.3d 1305 (Fed. Cir. 2000)..... 13
Graham v. John Deere Co., 383 U.S. 1 (1966)..... *passim*
Group One, Ltd. v. Hallmark Cards, Inc., 407 F.3d 1297 (Fed. Cir. 2005) 2, 6, 16
Group One, Ltd. v. Hallmark Cards, Inc., No. 97-1224-CV (W.D. Mo. Feb. 20, 2004)..... 5
Loctite Corp. v. Ultraseal Ltd., 781 F.2d 861 (Fed. Cir. 1985)..... 13
Mandel Bros., Inc. v. Wallace, 335 U.S. 291 (1948)..... 12, 13
Nobelpharma AB v. Nobelpharma USA, Inc., 141 F.3d 1059 (Fed. Cir. 1998) 13
Paramount Publix Corp. v. Am. Tri-Ergon Corp., 294 U.S. 464 (1935) 11
Peters v. Hanson, 129 U.S. 541 (1889)..... 11
In re Rouffet, 149 F.3d 1350 (Fed. Cir. 1998)..... 4
Ruiz v. A.B. Chance Co., 234 F.3d 654 (Fed. Cir. 2000)..... 13, 14
Sakraida v. AG Pro, Inc., 425 U.S. 273 (1976)..... 14, 15
In re Sernaker, 702 F.2d 989 (Fed. Cir. 1983)..... 10
Winner Int'l Royalty Corp. v. Wang, 202 F.3d 1340 (Fed. Cir. 2000) 15

CONSTITUTION AND STATUTES

U.S. Const. art. I, § 8 ..... 3, 4
35 U.S.C. § 103 (2001)..... *passim*

TABLE OF AUTHORITIES—Continued

OTHER

Page

FTC Hearing on Business Perspectives on Patents: Biotech and Pharmaceuticals, Feb. 26, 2002 ..... 6, 7

FTC Hearing on Business Perspectives on Patents: Hardware and Semiconductors, Feb. 28, 2002 7

FTC Hearing on Business Perspectives on Patents: Software and the Internet, Feb. 27, 2002 ..... 6, 7

Thomas Jefferson, *Letter to Oliver Evans (Jan 16, 1814)*, *in* 14 Writings of Thomas Jefferson 66 ..... 8, 9

IN THE

Supreme Court of the United States

No. 04-1350

KSR INTERNATIONAL CO.,
Petitioner,

v.

TELEFLEX INC. and TECHNOLOGY HOLDING CO.,
Respondents.

On Petition for Writ of Certiorari to the United States Court of Appeals for the Federal Circuit

BRIEF *AMICUS CURIAE* OF CISCO SYSTEMS INC., MICROSOFT CORP., HALLMARK CARDS, INCORPORATED, V.F. CORPORATION, AND FORTUNE BRANDS INC.

INTEREST OF THE *AMICI CURIAE*

Amici curiae Cisco Systems Inc., Microsoft Corp., Hallmark Cards, Incorporated, V.F. Corporation, and Fortune Brands Inc. respectfully submit this brief in support of petitioner, KSR International Co., urging the grant of the petition for a writ of certiorari to review the judgment of the United States Court of Appeals for the Federal Circuit because that judgment rests on an application of the obviousness test of Section 103(a) of the Patent Act that is inconsistent with Section 103(a), this Court's precedent and the policies underlying the patent laws.[1]

[1] Pursuant to Rule 37.6, *amici* represent that this brief was not authored in part or in whole by counsel for any party, and that no person or entity

Cisco Systems is an innovative company of over 34,000 employees worldwide that designs and sells network equipment. It has brought products to market that have helped create the Internet as it exists today and that have helped change the way people communicate. It provides products and services in the area of IP telephony, Internet routers, home and LAN networking, and Internet and network security.

Microsoft Corporation is a company of 57,000 employees that develops, licenses and supports a wide range of software products for a multitude of computing devices. These products include operating systems, server applications, information worker productivity applications, business solutions applications, software development tools, and mobile computing and embedded devices. Microsoft also sells home entertainment systems, games and peripherals. Through MSN Network and other Internet portals, Microsoft provides Internet services and content. Microsoft is a leading innovator in the computer software industry and owns more than 5,500 U.S. patents.

Hallmark is known worldwide for its greeting cards. It also produces a wide range of gifts, keepsakes, books and decorative products. The company regularly makes use of innovations, both patented and unpatented, in the manufacture of its products. Hallmark is the defendant in *Group One, Ltd. v. Hallmark Cards, Inc.*, 407 F.3d 1297 (Fed. Cir. 2005), in which the Federal Circuit reversed a grant of judgment as a matter of law because it found that Hallmark did not satisfy its burden with respect to the court's motivation test.

Fortune Brands is a leading consumer brands company. Its subsidiaries engage in the manufacture, production and sale of home and hardware products, golf products, office prod-

---

other than *amici* has made a monetary contribution to the preparation or submission of this brief.

ucts, and wine and spirits. Among the brands owned by Fortune Brands subsidiaries are Titleist, Moen, KitchenCraft, Master Lock, Swingline, Day Timer and Wilson Jones.

V.F. Corporation is a global leader in branded apparel and outdoor products with more than 50,000 employees. Its principal brands include Lee, Wrangler, Earl Jean, The North Face, Jansport, Eastpak, Vans, Reef, Kipling, Vanity Fair, Vassarette, Bestform, Lily Of France, and Red Kap.

As large industrial manufacturers, developers and users of technology, *amici* are vitally interested in the U.S. patent system and the maintenance of traditional limits on what qualifies as a patentable invention. *Amici* believe that the Federal Circuit's current interpretation of 35 U.S.C. § 103(a) hurts innovation by providing too lenient a standard for obtaining a patent, and by invading the province of courts to decide ultimate questions of patent validity. The motivation test allows patents to be issued for insignificant extensions of existing technology. The motivation test not only sets bad patent policy, but it also contravenes firmly established Supreme Court precedent for the appropriate test for obviousness under Section 103(a).

The time is right for this Court to reestablish the primacy of its precedent in this area. This case provides an excellent vehicle for doing so.

REASONS FOR GRANTING THE PETITION

I. THE FEDERAL CIRCUIT'S CURRENT TEST FOR OBVIOUSNESS HURTS INNOVATION.

The patent laws are premised on a bargain expressed in the Constitution that is made between an inventor and the public with respect to inventions not previously known to the public: in exchange for a grant of a period of exclusivity to the inventor, the public is thereafter allowed unencumbered use of the disclosed invention "to promote the . . . useful Arts."

U.S. Const. art. I, § 8; *see Graham v. John Deere Co.*, 383 U.S. 1, 9 (1966) (the patent grant is "an inducement[] to bring forth new knowledge."). The public must wait for a period of time for the monopoly to expire, but once it expires, it may use the patented invention freely.

Section 103(a) provides the mechanism to police the bargain. It states that no invention may be patented "if the differences between the subject matter sought to be patented and the prior art are such that the subject matter as a whole would have been obvious at the time the invention was made to a person having ordinary skill in the art to which said subject matter pertains." 35 U.S.C. § 103(a) (2001). This section as enacted should prevent the patenting of routine variations of prior art.

The manner in which courts interpret Section 103(a) affects the value of this bargain. If the test for patentability becomes too lenient and allows routine variations on prior inventions to be patented anew, the public's free use of information in the public domain is clouded by a new monopoly. Moreover, the public receives no value in the disclosure of minor variations of inventions already known and disclosed in the prior art.

The Federal Circuit's motivation test establishes too lenient a standard for patentability, and it has had a stifling effect on true innovation because it encumbers ideas well beyond the limits imposed by Congress for patentable inventions, and effectively precludes courts from exercising their authority to decide ultimate questions of patent validity. Under the motivation test, instead of a court deciding whether claimed subject matter is patentable in view of all pertinent prior art, a trier of fact—typically a jury—is tasked with determining "whether there is something in the prior art as a whole to suggest the desirability, and thus the obviousness, of making the combination." *In re Rouffet*, 149 F.3d 1350, 1356 (Fed. Cir. 1998) (citations omitted). To satisfy the test, there must be some proven "'suggestion, teaching, or motivation' that

would have led a person of ordinary skill in the art to combine the relevant prior art teachings in the manner claimed" in a patent. (Pet. App. A at 6a (citations omitted).)

Amici have experienced first-hand the stifling effect of the motivation test. Cisco's experience with the patent process is a case in point. Cisco has found that the proliferation of large numbers of obvious patents has increased greatly the potential for inadvertent infringement, requiring it to take defensive measures. In order to neutralize the effect of these obvious patents, Cisco has obtained hundreds of patents for defensive purposes in technology areas in which it develops products.

Microsoft has been sued for allegedly infringing dozens of questionable patents in the software field. The lack of access to software prior art, the inability to find the prior art that does exist, and the limited resources of the Patent Office, make searching by the Patent Office particularly ineffective. Given the difficulty inherent in finding software prior art, proving a software patent invalid by clear and convincing evidence, especially if a motivation to combine element is also required, is exceedingly difficult.

Hallmark is another case in point. It created and brought to market a unique curled ribbon bow that soon became a big seller. Hallmark designed a machine to make the bow, and was then sued by a company with two patents on a ribbon curling machine. The patents in question had been issued over a 40-year-old patent for a ribbon curling machine, even though the only difference between them was the manner in which the ribbon left the machine—the older patent guided curled ribbon through a tube, and the newer patents blew the curled ribbon onto a conveyor belt. After six years of litigation, the district court in 2004 invalidated the patents at the JMOL stage, calling them "indubitably obvious." *Group One, Ltd. v. Hallmark Cards, Inc.*, No. 97-1224-CV, slip op. at 32-33 (W.D. Mo. Feb. 20, 2004). The Federal Circuit reversed last month, finding on its own reading of the record

that there was sufficient evidence to support the no-motivation element and the jury's finding in favor of the patent holder on obviousness. *Group One, Ltd. v. Hallmark Cards, Inc.*, 407 F.3d 1297 (Fed. Cir. 2005). Thus, after eight years of litigating an "indubitably obvious" patent where the patent holder admitted that all elements of the patent were found in the prior art (and all but one element found in the single 40-year-old patent), the Federal Circuit refused to affirm on invalidity because its motivation test was not satisfied.

Since the emergence of the motivation test in the mid-1980's, V.F. Corporation increasingly has been confronted with claims of patent infringement on purported inventions involving technologically trivial subject matter. For example, the sheer number of patents on apparel items such as bras has exploded, and many of these patents involve routine variations on known technology.

Fortune Brands' experience with its products is similar. A simple search for golf ball patents issued in 2004 will yield over 200 entries. This is also true of golf clubs and other Fortune Brand products. Fortune Brands is also being confronted with claims of infringement and requests for licenses on purported inventions and must file its own patents as a defensive measure to prevent others from filing patents that could affect its ability to market new products without hindrance.

Amici's experiences were echoed by other representatives from industry in hearings held by the Federal Trade Commission in 2002. Among the concerns raised:

- Poor quality patents contribute to an "anticommons" effect: a situation where multiple patent owners each have a right to exclude others from a resource and no one may have effective use of sufficient resources to create a product. (Transcript of FTC Hearing on Business Perspectives on Patents: Biotech and Pharmaceuticals (Feb. 26, 2002) at 241.) This is a partic-

ular problem in the software field, where a patent for a single subroutine could affect software that has a multitude of patentable ideas. (Transcript of FTC Hearing on Business Perspectives on Patents: Software and the Internet (Feb. 27, 2002) at 351-52.);

- Defensive, large scale patenting drains resources away from real innovation: scientists and engineers must spend time working with lawyers and patent agents to file patent applications where their time would be better spent on product development and research. (Transcript of FTC Hearing on Business Perspectives on Patents: Hardware and Semiconductors (Feb. 28, 2002) at 677-78.);
- The proliferation of trivial patents makes product clearance nearly impossible and leads to costly royalty stacking. (Transcript of FTC Hearing on Business Perspectives on Patents: Biotech and Pharmaceuticals (Feb. 26, 2002) at 310.); and
- The multitude of patents creates uncertainty in the legal rights of the patent holders and heightens the risks associated with innovation investment decisions, which leads to decreased industry investment in research and development. (*See* Transcript of FTC Hearing on Business Perspectives on Patents: Hardware and Semiconductors (Feb. 28, 2002) at 696.)

While some of these concerns have been addressed through market means, *e.g.*, patent pools, cross licensing, etc., in certain situations there is no practical way to minimize the detrimental effect of awarding obvious patents. The proliferation of patent portfolio companies illustrates the point. These patent portfolio companies do not sell products themselves (and thus have no need for cross licenses); rather, they generate revenue through licensing other companies that actually make and sell products. Many of these patent portfolio companies try to patent incremental changes to a product-making company's products so that the product-

making company would unintentionally infringe when it successfully brings products to the marketplace. The long delays in the Patent Office work to their benefit by keeping the eventual coverage of their patents indefinite until they issue. They also benefit from the high cost of litigation by demanding license fees that are often less than the cost of litigation, hoping that people will pay even if they do not infringe, or, if they do infringe, it would be too costly to change the product. The relaxation of the test for patentability under Section 103(a) gives these companies the space in which to siphon off license royalties from product-making companies.

Whether companies can or cannot mitigate the impact of obvious patents is really beside the point. The mitigating transactions into which companies enter—settling disputes on patents of dubious validity, entering into excessive patent pooling, creating cross-licensing arrangements—all result in higher costs to the consuming public. A network router, a golf club, a software program, a ribbon bow, a bra all become more expensive as more and more patent holders must be paid royalties, and unnecessarily so where these obvious patents contribute no innovation to the product being sold. Ultimately, it is the public that is the loser when the patent laws are diluted in favor of obvious patents.

The benefit that the public derives from the bargain with the inventor—disclosure of inventions that are not already known—must be safeguarded. Thomas Jefferson expressed his concern for this bargain between the inventor and the public when he wrote:

> [I]f a new application of our old machines be a ground of monopoly, the patent law will take from us much more good than it will give. Perhaps it may mean another thing, that while every one has a right to the distinct and separate use of the buckets, the screw, the hopper-boy, in their old forms, the patent gives you the exclusive right to combine their uses on the same object.

> But if we have a right to use three things separately, I see nothing in reason, or in the patent law, which forbids our using them all together. A man has a right to use a saw, an axe, a plane, separately; may he not combine their uses on the same piece of wood? He has a right to use his knife to cut his meat, a fork to hold it; may a patentee take from him the right to combine their use on the same subject? Such a law, instead of enlarging our conveniences, as was intended, would most fearfully abridge them, and crowd us by monopolies out of the use of the things we have.

Thomas Jefferson, *Letter to Oliver Evans (Jan 16, 1814), in* 14 Writings of Thomas Jefferson 66 (Andrew A. Lipscomb & Albert E. Bergh eds., 1903).

This Court in *Graham* noted that Jefferson was an enemy of monopolies but ultimately an advocate of the patent system. 383 U.S. at 7-10. But even at this writing in the later stages of his life, he was still greatly concerned with the potential for obvious patents to retake what already is in the possession of the people.

This Court must reestablish the balance between inventor and the public because the public is not getting the benefit intended by the Constitution under the current test for obviousness.

II. THE FEDERAL CIRCUIT'S CURRENT TEST IGNORES THE PRECEDENT OF THIS COURT.

In creating the motivation test, the Federal Circuit has essentially ignored this Court's precedent construing and applying Section 103(a) of the current Patent Act of 1952 and the traditional standard of "invention" that Section 103(a) was held, in *Graham*, to have codified. 383 U.S. at 17. Supreme Court intervention is required to remedy the Federal Circuit's digression.

Nowhere in *Graham* is there any discussion of a "teaching, suggestion or motivation" element in the obviousness analysis. This truism is illustrated by the way in which the Federal Circuit in this case cited the obviousness standard: it cited *Graham* for the four elements (the scope and content of the prior art, the level of skill of a person of ordinary skill in the art, the differences between the claimed invention and the prior art and objective indicia of non-obviousness), but only cited to Federal Circuit cases for the motivation test. (*See* Pet. App. A at 6a.)

Soon after the Federal Circuit was established, it added a form of the motivation test to the *Graham* obviousness analysis. A year after its establishment, in *In re Sernaker*, 702 F.2d 989 (Fed. Cir. 1983), the Federal Circuit included in the test of obviousness "whether a combination of the teachings of all or any of the references would have suggested (expressly or by implication) the possibility of achieving further improvement by combining such teachings along the line of the invention in suit . . . ." *Id.* at 994. In announcing this test, the *Sernaker* court relied on prior cases from the Court of Customs and Patents Appeals, but did not cite *Graham* for this proposition. *See id.* Over the next twenty-two years, the Federal Circuit continued to use a form of this test, which eventually evolved into the "teaching, suggestion or motivation" formulation of today.

In re Sernaker and later Federal Circuit cases did not cite to this Court to justify engrafting this motivation test onto the obviousness analysis. Nor could they because the test ignores the caution of this Court in *Graham* that "strict observance of the requirements laid down here will result in that uniformity and definiteness which Congress called for in the 1952 Act." 383 U.S. at 18.

Uniformity is in fact the first casualty of the Federal Circuit's approach. As Petitioner pointed out, the *Graham* case itself likely would have come out differently if this Court

applied the motivation test. (*See* Pet. at 12-13.) In addition, this Court's decision in *Dann v. Johnston*, 425 U.S. 219 (1976), a case invalidating a software patent, may have come out differently if a motivation test were applied rather than a straight application of the *Graham* analysis.

Other Supreme Court cases also would have been decided differently had a motivation test been applied to them. *Amici* believe that at least four other Supreme cases would have gone the other way applying the Federal Circuit's test.

In *Peters v. Hanson*, 129 U.S. 541, 549-50 (1889), one of the patents described the use of an oval slot to make the dash-feet of carriages adjustable. The prior art included applications of slots to other structures, including "[b]ridge-work, jail-work, vehicles, dashes, tops[,]" *id.* at 551, but there was no evidence cited in *Peters* of a teaching, suggestion or motivation to apply oval slots to the dash-foot of carriages. This Court nevertheless invalidated the patent, concluding that "any ordinarily skilled mechanic . . . would look for some other manner to make connection, for the reason that this is one of the simplest and easiest methods for connecting and allowing adjustment where both parts, when two pieces are used, are made of iron." *Id.* at 552-53.

In *Paramount Publix Corp. v. American Tri-Ergon Corp.*, 294 U.S. 464, 472-74 (1935), the patent was for a method for producing movies with sound by combining three prior art processes. There was no evidence cited in *Paramount Publix* that there was a teaching, suggestion, or motivation to combine these processes in the manner claimed. This Court nevertheless invalidated the patent, finding that the advance in the patent was "ready at hand" and merely "awaited the public acceptance of the sound motion picture . . . ." *Id.* at 476.

In *Dow Chemical Co. v. Halliburton Oil Well Cementing Co.*, 324 U.S. 320, 322 (1945), the challenged patent referred to an oil extracting process that dissolved limestone without having equipment suffer substantial corrosion in the process. There had been a previous patent (the "Frasch method") using acid to dissolve the limestone to achieve the same result, but the acid would also harm the drilling equipment. *Id.* at 323-24. The newer process improved on the Frasch method by adding an inhibiting agent to the hydrochloric acid solution to prevent corrosion, diluting the concentrated hydrochloric acid solution and using an ordinary pump tube instead of a specially protected supply pipe to introduce the acid into the well. *Id.* at 325.

While the prior art was replete with instances of using inhibiting agents upon hydrochloric acid to prevent corrosion in iron and steel products, no one had taught or suggested the use of inhibited acids in oil wells. *Id.* at 328. Nor was any evidence offered of a motivation to create the process prior to the filing of the patent. But this Court still invalidated the patent, holding:

> The fact that prior to 1932 no one had apparently thought to use an inhibitor while acidizing an oil well to increase production cannot inject into the [patented] process the attributes of an invention.... He who is merely the first to utilize the existing fund of public knowledge for new and obvious purposes must be satisfied with whatever fame, personal satisfaction or commercial success he may be able to achieve. Patent monopolies, with all their significant economic and social consequences, are not reserved for those who contribute so insubstantially to that fund of public knowledge.

Id.

In *Mandel Bros., Inc. v. Wallace*, 335 U.S. 291, 292-93 (1948), the challenged patent was a combination of urea and a

cosmetic to create a cosmetic that would help inhibit perspiration. This Court noted that "these [prior] patents standing alone would not have taught these patentees to experiment with urea to solve their cosmetic problem." *Id.* at 294. Nevertheless, it declared the patent invalid because it concluded that a person of ordinary skill in the art looking for the solution described in the patent would have engaged in routine experiments and would have tried to use urea in those experiments: "[W]e think that the state of the prior art was plainly sufficient to demonstrate to any skilled chemist searching for an anticorrosive agent that he *should make the simple experiment* that was made here." *Id.* at 294-95 (emphasis supplied).

These four cases would have been decided differently if required to satisfy the Federal Circuit's motivation test. If the Federal Circuit's test requires prior Supreme Court cases to be decided differently—cases that have not been overruled by subsequent Supreme Court decisions or superseded by the Patent Act[2]—it has strayed too far from precedent in establishing the motivation test.

The reason the Federal Circuit cites most often for its need for a motivation test is the danger of hindsight reconstruction. *See, e.g., In re Dembiczak*, 175 F.3d 994, 999 (Fed. Cir. 1999), *abrogated on other grounds by In re Gartside*, 203 F.3d 1305 (Fed. Cir. 2000) (referring to "the hindsight trap"); *Loctite Corp. v. Ultraseal Ltd.*, 781 F.2d 861, 873 (Fed. Cir. 1985), *overruled on other grounds by Nobelpharma AB v. Nobelpharma USA, Inc.*, 141 F.3d 1059 (Fed. Cir. 1998) (referring to "the tempting but forbidden zone of hindsight"); *Ruiz v. A.B. Chance Co.*, 234 F.3d 654, 664 (Fed. Cir. 2000) (citations omitted) (referring to "fall[ing] victim to the insid-

---

[2] This Court in *Graham* held that the Patent Act of 1952 was a codification of prior case law on patentability and did not represent a lowering of the bar to patentability. *See Graham*, 383 U.S. at 17.

ious effect of a hindsight syndrome"). While it is unfair to judge the obviousness of an invention simply against itself, the court's diligence in preventing hindsight has led to a substantial weakening of the standard for patentability. This Court saw no danger in hindsight that could not be accounted for under the test that it annunciated in *Graham* and reaffirmed and followed in *Sakraida v. AG Pro, Inc.*, 425 U.S. 273 (1976), and *Anderson's-Black Rock v. Pavement Salvage Co.*, 396 U.S. 57 (1969).

To be sure, in striking the balance mandated by Section 103(a) as to what is or is not patentable, the Federal Circuit must contend with a difficult task. But the best chance the Federal Circuit has of doing so is to hew close to this Court's precedent. All it need do is take the instruction given in *Graham*: "strict observance of the requirements laid down here will result in that uniformity and definiteness which Congress called for in the 1952 Act." 383 U.S. at 18.

III. THE MOTIVATION TEST INVADES THE PROVINCE OF THE COURT TO DETERMINE THE ULTIMATE ISSUE OF OBVIOUSNESS.

The motivation test hurts innovation not only because the test itself makes it too easy to obtain a patent for obvious inventions, but also because the test undermines a key holding of *Graham*: "the ultimate question of patent validity is one of law." 383 U.S. at 17. Although this question "lends itself to several basic factual inquiries," *id.*, determining whether prior art renders claimed subject matter obvious or unpatentable is a legal question that courts, not juries, routinely determined prior to the creation of the Federal Circuit. This is exemplified by this Court's *Sakraida* decision, which directed the reinstatement of a district court's grant of summary judgment of invalidity under Section 103(a). 425 U.S. at 273-74.

In contrast, the Federal Circuit has held that the presence or absence of a motivation to combine prior art references is a fact question for a jury to decide. *See, e.g., Winner Int'l Royalty Corp. v. Wang*, 202 F.3d 1340, 1348 (Fed. Cir. 2000). The motivation test, however, is not addressed to any of the factual inquiries identified in *Graham*, but amounts to a surrogate test for determining legal questions of obviousness. To ask whether a hypothetical person having ordinary skill in an art would have had a motivation to make a claimed invention is to redefine whether claimed subject matter meets the condition for patentability specified in Section 103(a).

The present case illustrates this point. The district court in this case held that the undisputed prior art of record rendered obvious the subject matter recited in the patent claim in issue. The Federal Circuit vacated and remanded, holding that the invalidating legal effect of prior art could not be determined as a matter of law, but was a factual question governed by the motivation test. (Pet. App. A at 8a.)

If the Federal Circuit had followed this Court's precedents in *Graham, Anderson's-Black Rock*, and *Sakraida*, it could have affirmed the district court on a *de novo* standard of review—as this Court ordered be done in *Sakraida*. 425 U.S. at 274-75. It goes without saying that requiring an additional factual element in obviousness determinations makes the grant of summary judgment much more difficult to obtain.

Transferring obviousness determinations from courts to juries (whether through the motivation test or another framework) also diminishes the role of the Federal Circuit as a specialized patent court. Post-verdict and appellate review of jury verdicts on questions of fact is far more limited than is review of questions of law. To the extent that ultimate questions of obviousness are treated as factual questions and decided by juries, litigants are largely and often wholly deprived, not just of access to summary adjudication, but also to any meaningful post-trial or appellate review. This result

defeats the objective of Congress in establishing the Federal Circuit to have it sit as an expert appellate court to decide patent law issues. Determining whether subject matter is "worth to the public the embarrassment of an exclusive patent," *Graham*, 383 U.S. at 10-11 (quoting Thomas Jefferson), whether through the motivation test, a modified test or a different test altogether, must be left for courts to decide as a matter of law, not for juries to decide as a matter of fact. In holding to the contrary, the decision below raises a question of broad and general importance that merits this Court's review.

IV. IT IS APPROPRIATE TO DECIDE THESE ISSUES NOW AND THIS CASE IS AN APPROPRIATE VEHICLE IN WHICH TO ADDRESS THEM.

It is not often that a patent case comes to the attention of this Court presenting important issues of patent law while also being unburdened by the technical complexities attendant to most patent cases. This is such a case, and it provides an excellent vehicle to address this very important question of patent law. In this regard, we note that *amicus* Hallmark will soon file a petition for certiorari seeking review of the Federal Circuit's motivation test in the case *Group One, Ltd. v. Hallmark Cards, Inc.*, 407 F.3d 1297. The Federal Circuit in *Group One* reversed a grant of JMOL on obviousness on the basis of the motivation test. The *Group One* case also presents an uncomplicated factual setting and would provide an appropriate vehicle, along with this case, to address the question of obviousness.

Moreover, we agree with *Amici Curiae* Twenty-Four Intellectual Property Professors that counsel for both parties are capable litigators and will ably present the salient issues to the Court. We also note that the *amicus* participation of the

intellectual property law professors will ensure that all pertinent arguments are brought to the attention of the Court.

Finally, we believe that the issue is ripe for determination under the procedural posture of the case. Deciding the question raised on certiorari in favor of the Petitioner would allow for the disposal of the case on summary judgment.

CONCLUSION

For the foregoing reasons, the petition for writ of certiorari should be granted.

Respectfully submitted,

PETER A. SULLIVAN *
HUGHES HUBBARD & REED LLP
One Battery Park Plaza
New York, New York 10004
(212) 837-6000

Counsel for Cisco Systems Inc., Microsoft Corp., Hallmark Cards, Incorporated, V.F. Corporation, and Fortune Brands Inc.

* Counsel of Record

MOTION FILED
MAY 12 2005

(2)

No. 04-1350

IN THE

Supreme Court of the United States

KSR INTERNATIONAL CO.,
Petitioner,

v.

TELEFLEX INC. AND TECHNOLOGY HOLDING CO.,
Respondents.

On Writ of Certiorari to the United States Court of Appeals for the Federal Circuit

MOTION OF THE PROGRESS & FREEDOM FOUNDATION FOR LEAVE TO FILE A BRIEF AS *AMICUS CURIAE* IN SUPPORT OF THE PETITION FOR A WRIT OF CERTIORARI

AND

BRIEF OF THE PROGRESS & FREEDOM FOUNDATION AS *AMICUS CURIAE* IN SUPPORT OF THE PETITION FOR A WRIT OF CERTIORARI

JAMES V. DELONG *
SOLVEIG SINGLETON
THE PROGRESS & FREEDOM FOUNDATION
1401 H St., NW
Suite 1075
Washington, DC 20005
(202) 289-8928

* Counsel of Record

May 12, 2005

WILSON-EPES PRINTING CO., INC. – (202) 789-0096 – WASHINGTON, D. C. 20001

MOTION OF THE PROGRESS & FREEDOM FOUNDATION FOR LEAVE TO FILE A BRIEF AS *AMICUS CURIAE* IN SUPPORT OF THE PETITION FOR A WRIT OF CERTIORARI

The Progress & Freedom Foundation (PFF) respectfully moves this Court for leave to file the accompanying brief *amicus curiae* in support of the *Petition for a Writ of Certiorari* submitted by KSR International (KSR).

A letter of consent to the filing of this brief has been received from petitioner KSR. However, respondents Teleflex Inc. and Technology Holding Co. refused to grant consent, offering no explanation, and necessitating this motion.

The interest of PFF in this case stems from the work of our scholars on the interaction of technological change with the legal institution of intellectual property. We are strong supporters of intellectual property, and our scholars argue that strong and effective IP rights are vital to the effective functioning of free markets, and thus to the economic and social health of the nation and the world. In consequence, PFF has an interest in supporting the position of the petitioner when it urges this Court to restore vigor to the non-obviousness standard, thereby preventing the degradation of patent quality and a corresponding loss of credibility of the patent system itself.

Petitioner has briefed the technical aspects of this case concerning the prior art relating to the invention at issue, the serious split between the Federal Circuit and other circuits, and the Federal Circuit's disregard of this Court's patent precedents. PFF's proposed brief does not re-cover this ground. Rather, its analysis focuses on the importance of the policy issues presented by the case, and on the urgency of the need for this Court to address the stresses on the patent system created by economic and technological changes that

have occurred in the more than quarter of a century since the nonobviousness standard last commanded its attention.

For the above reasons, this motion for leave to file the attached brief *amicus curiae* should be granted.

Respectfully submitted,

JAMES V. DELONG *
SOLVEIG SINGLETON
THE PROGRESS &
FREEDOM FOUNDATION
1401 H St., NW
Suite 1075
Washington, DC 20005
(202) 289-8928

* Counsel of Record

May 12, 2005

BRIEF OF THE PROGRESS & FREEDOM FOUNDATION AS *AMICUS CURIAE* IN SUPPORT OF THE PETITION FOR A WRIT OF CERTIORARI

TABLE OF CONTENTS

	Page
TABLE OF AUTHORITIES	ii
INTEREST OF *AMICUS CURIAE*	1
SUMMARY OF ARGUMENT	3
ARGUMENT	4
I. The Growing Importance of Intellectual Property	4
II. The Growing Unease About Patent Quality	5
III. The Standard Applied by the Federal Circuit Causes Harm	8
IV. Solutions are Possible	14
V. This Case Presents a Good Vehicle for Reinvigorating the Nonobviousness Criterion	17
CONCLUSION	17

TABLE OF AUTHORITIES

CASES — Page

Atlantic Works v. Brady 107 U.S. 192, 199-200 (1882) 15
Graham v. John Deere Co., 383 U.S. 1 (1966) 9, 14
Great A. & P. Tea Co. v. Supermarket Corp., 340 U.S. 147 (1950) 9
In re Dembiczak, 175 F. 3d 994 (Fed. Cir. 1999).. 12
In re Lee, 277 F.3d 1338, 1345 (Fed. Cir. 2002)... 12
In re Zurko, 258 F.3d 1379, 1385 (Fed. Cir. 2001) 11
Sakraida v. Ag Pro, Inc., 425 U.S. 273 (1976)..... 9

U.S. PATENT AND TRADEMARK OFFICE MATERIALS

U.S. Patent No. 2,146,045, Amusement Swing. Filed July 2, 1936; Granted Feb. 7, 1939 (S. W. Zippler) 11
U.S. Patent No. 6,368,227, Method of Swinging on a Swing. Filed Nov. 17, 2000; Granted April 9, 2002 (Steven Olson)..... 10
U.S. Patent and Trademark Office, Official Gazette Notices, July 2, 2002 10
Reexamination Certificate (4803rd), U. S. Patent No. 6,368,227 (Olson). Issued: July 1, 2003 ... 11

GOVERNMENT REPORTS

Federal Trade Commission, *To Promote Innovation: The Proper Balance of Competition Law and Policy* (Oct. 2003) <http://www.ftc.gov/os/2003/10/innovationrpt.pdf> 5, 6, 9

TABLE OF AUTHORITIES—Continued

Page

National Research Council, *A Patent System for the 21st Century* (2004) (Stephen A. Merrill, Richard C. Levin, & Mark B. Myers (eds)) (Report of the Committee on Intellectual Property Rights in the Knowledge-Based Economy) <http://books.nap.edu/catalog/10976.html>, and authorities cited at page 61 therein (NRC citation form preserved): 6, 7

Barton, J. (2003). "Non-obviousness." *IDEA: The Journal of Law and Technology* 43:475

Desmond, R. (1993). "Nothing Seems Obvious to the Court of Appeals for the Federal Circuit: The Federal Circuit, Unchecked by the Supreme Court, Transforms the Standard of Obviousness Under the Patent Law," *Loyola of Los Angeles Law Review* 26:455-490

Kastriner, L. (1991). "The Revival of Confidence in the Patent System," *Journal of the Patent and Trademark Office Society* 73:5-23

Lunney, G. (2001). "E-Obviousness." *Michigan Telecommunications and Technology Law Review* 7(363):363-421

Merges, R. (1999). "As Many as Six Impossible Patents Before Breakfast: Property Rights for Business Concepts and Patent System Reform." *Berkeley Technology Law Journal* 14:578-615

Vermont, S. (2001). "A New Way to Determine Obviousness: Applying the Pioneer Doctrine to 35 U.S.C. § 103(A)." *AILPA Quarterly Journal* 29(Summer): 375-444

TABLE OF AUTHORITIES—Continued

ARTICLES AND BOOKS Page

J. Bradford DeLong & Lawrence H. Summers, *The New Economy: Background, Historical Perspective, Questions, and Speculations*, Federal Reserve Bank of Kansas City Economic Review 29, 35 (Fourth Quarter 2001) <http://www.kc.frb.org/PUBLICAT/ECONREV/Pdf/4q01delo.pdf> 5

Irah H. Donner, *Combatting Obviousness Rejections Under 35 U.S.C. Section 103*, 6 Alb. L.J. Sci. & Tech. 159 (1996) 15

Adam B. Jaffe & Josh Lerner, *Innovation and Its Discontents: How Our Broken Patent System is Endangering Innovation and Progress, and What To Do About It* (Princeton Univ. Press 2004) 11

Steven W. Usselman, *Regulating Railroad Innovation: Business, Technology, and Politics in America, 1840-1920* (Cambridge Univ. Press 2002) 14

MISCELLANEOUS

Richard C. Levin (President, Yale University) & Mark B. Myers, (Wharton School, University of Pennsylvania), Statement Before the Subcommittee on Intellectual Property, Senate Committee on the Judiciary, *Hearings on Perspectives on Patents* (April 25, 2005) <http://judiciary.senate.gov/testimony.cfm?id=1475&wit_id=4217> 7

Brief of Amicus Curiae *Progress and Freedom Foundation in Support of Petitioner*, Metro-Goldwyn-Mayer Studios v. Grokster, Ltd., *cert. granted*, __U.S.__ (2004) (Dkt. No. 04-480) (Brief filed: Jan. 24, 2005) 2, 13

TABLE OF AUTHORITIES—Continued

Page

David Streitfeld, "Note: This Headline is Patented," *Chicago Tribune* (Online Edition), Feb. 7, 2003 (unpaginated) <http://www.chicagotribune.com/technology/local/chi-0302,0,7319176.story> 11

Statement by India at the Inter-Sessional Intergovernmental Meeting on a Development Agenda for WIPO, April 11-13, 2005, <http://weblog.ipcentral.info/archives/2005/04/more_wipo_india.html> 13

IN THE

Supreme Court of the United States

No. 04-1350

KSR INTERNATIONAL CO.,
Petitioner,

v.

TELEFLEX INC. AND TECHNOLOGY HOLDING CO.,
Respondents.

On Writ of Certiorari to the United States Court of Appeals for the Federal Circuit

BRIEF OF THE PROGRESS & FREEDOM FOUNDATION AS *AMICUS CURIAE* IN SUPPORT OF THE PETITION FOR A WRIT OF CERTIORARI

INTEREST OF *AMICUS CURIAE*

The Progress & Freedom Foundation (PFF) is a non-profit research and educational institution, as defined by the Code of the Internal Revenue Service, 26 U.S.C. § 501(c)(3).[1] The Foundation's principal mission is to study the impact of the

[1] Pursuant to Supreme Court Rule 37.6, *Amicus Curiae* states that no counsel for any party to this dispute authored this motion or this brief in whole or in part and no person or entity other than *Amicus Curiae* made a monetary contribution to the preparation or submission of this motion or this brief.

digital and electronic revolution and its implications for public policy.

PFF's interest in this case stems from the work of an internal project called IPCentral.Info (a.k.a., the Center for the Study of Digital Property (CSDP)), which is dedicated to developing and advancing market-based, property-rights-oriented approaches to issues presented by technological change. This focus makes us strong supporters of property rights in intellectual creations. For example, we filed a brief with this Court in support of the content industry petitioners in *Metro-Goldwyn-Mayer Studios v. Grokster, Ltd.*[2]

In furtherance of the mission, we maintain a website, *IPcentral.Info*,[3] which contains links to a variety of materials on intellectual property issues, including written materials, a weblog, and links to other sites with related interests. Staff members prepare or commission analyses of important intellectual property issues. Staff members also appear before congressional committees and interact regularly with journalists, academicians, industry representatives, and government officials.

PFF, precisely because of its fierce insistence on the importance of intellectual property rights and markets to the world economy, is concerned that the patent system not overreach by trying to protect too much. Extensions of the system to cover creations that are not true advances cause misallocation of resources and provide ammunition to those whose goal is to undermine the basic idea of patents.

Stemming from this concern, PFF is disturbed by the Federal Circuit's over-lenient application of the criterion that

---

[2] *Brief of* Amicus Curiae *Progress and Freedom Foundation in Support of Petitioner*, Metro-Goldwyn-Mayer Studios v. Grokster, Ltd., *cert. granted*, __U.S.__ (2004) (Dkt. No. 04-480) (Brief filed: Jan. 24, 2005).

[3] http://www.ipcentral.info

an invention be nonobvious, and has a strong interest in urging this Court to reverse this trend.

SUMMARY OF ARGUMENT

We urge the Court to grant *certiorari* in this case because of the growing concern among patent scholars and business practitioners over the Federal Circuit's lax standard of "obviousness." Over a quarter of a century has passed since this Court last considered the application of this statutory standard. Meanwhile, technological change has transformed the economy and the importance of property rights in creativity has grown as intellectual capital replaces physical capital as the great engine of economic productivity.

The Federal Trade Commission, the National Research Council, and many scholars have expressed concern about the quality of patents, and link the problems in part to the Federal Circuit's interpretation of the "obviousness" standard. That court's insistence that patent examiners find in prior art some concrete suggestion or motivation for combining previous elements into the invention for which the patent is claimed poses an obstacle to patent examiners' ability to weed out trivial patents.

The standard of what is obvious or nonobvious to a person with "ordinary skill in the art" is a fulcrum of the quality issue. Too loose a standard discourages innovation by denying rewards to inventors. But too lax a standard triggers a gold rush after every significant advance, to improve on it in some trivial yet patentable way. The result is misdirected innovation. Immense transaction costs are imposed on the economy as businesses try to negotiate their way out of patent thickets.

There are better solutions to the problem of how to avoid the trap of hindsight in considering when a patent should be granted. The Federal Circuit's obviousness test establishes a one-way ratchet in favor of a patent grant. The resulting flood

of trivial patents retards innovation and competition. It also undermines the legitimacy of the patent system as a whole, as the system is perceived, particularly in other countries, to reward patentees at the expense of the public as a whole.

ARGUMENT

Petitioner lays out the compelling legal reasons for granting *certiorari* in this case: The Federal Circuit's steady, deliberate, and unwise departure from this Court's precedents; the conflict among the circuits; and the more than quarter of a century that has passed since this Court last considered the crucial concept of "nonobviousness."

Amicus will not repeat these points. Instead, it will focus on policy considerations that add gravitas to this matter.

I. The Growing Importance of Intellectual Property

On the surface, this case involves a simple product, the automobile accelerator pedal. But this product, like so many these days, has been revolutionized, because what was once a straightforward mechanical linkage is now a hybrid that marries the mechanical act of pressing a pedal to electronic devices composed mainly of computer chips and software code.

The pedal exemplifies the great shift in the nature of economic value that has occurred over the past few decades. As two prominent economic thinkers recently noted:

> We used to live in an economy in which the canonical source of value was an ingot of iron, a barrel of oil or a bushel of wheat. . . . We are moving to an economy in which the canonical source of value is a gene sequence, a line of computer code, or a logo. As Chairman Greenspan [citation omitted] has often emphasized, in such a world, goods are increasingly valued not for their

> physical mass or other physical properties but for weightless ideas . . . .[4]

The authors point out the change from the basic industrial economy:

> Back in the Gilded Age intellectual property as such was not such an important factor. Industrial success was based on knowledge, but on knowledge crystalized in dedicated capital. Many people knew organic chemistry. Few companies--those that had made massive investments—could make organic chemicals.[5]

This evolution in the locus of value increases the importance of setting proper definitions and boundaries on intellectual property. Thus, while the immediate case involves an accelerator pedal, it has long-term significance for software, biotechnology, pharmaceuticals, electronics, and the other paraphernalia of the digital age.

II. The Growing Unease About Patent Quality.

The level of concern about the quality of patents is high and rising, with particular focus on the "nonobvious" standard. A recent Federal Trade Commission (FTC) report devoted extensive attention to the issue of "questionable patents."[6] It recommended specifically that legal standards

---

[4] J. Bradford DeLong & Lawrence H. Summers, *The New Economy: Background, Historical Perspective, Questions, and Speculations*, Federal Reserve Bank of Kansas City Economic Review 29, 35 (Fourth Quarter 2001) <http://www.kc.frb.org/PUBLICAT/ECONREV/Pdf/4q01delo.pdf > J. Bradford DeLong is Professor of Economics at the University of California at Berkeley; Lawrence H. Summers is the President of Harvard University.

[5] *Id.* at 51.

[6] Federal Trade Commission, *To Promote Innovation: The Proper Balance of Competition Law and Policy* (Oct. 2003), *passim*. <http://www.ftc.gov/os/2003/10/innovationrpt.pdf> [hereafter "FTC Report"].

used to evaluate whether a patent is "obvious" should be "tighten[ed]," and it criticized the test imposed on the field by the Federal Circuit.[7]

A study by the National Research Council (NRC) expressed similar fears:

> [Several factors] lead the committee to conclude that there are reasons to be concerned about both the courts' interpretation of the substantive patent standards, *particularly non-obviousness*, and the USPTO's application of the standards in examination. [Emphasis added.][8]

The Co-Chairs of this NRC study recently repeated this fear to a Senate subcommittee:

> The NRC committee supports seven steps to ensure the vitality and improve the functioning of the patent system:
>
> * * * *
>
> 2) Reinvigorate the nonobviousness standard. The requirement that to qualify for a patent an invention cannot be obvious to a person of ordinary skill in the art should be assiduously observed. In an area such as business

---

[7] *Id.* at pp. 10-12. The FTC cited the statement of a witness who noted that "his company's engineers . . . 'every day' independently invent things that have been deemed nonobvious." The FTC added that "Requiring concrete suggestions or motivations beyond those actually needed by a person of ordinary skill in the art, and failing to give weight to suggestions implicit from the prior art as a whole, suggestions from the nature of the problem to be solved, and the ability and knowledge of one of ordinary skill in the art, errs on the side of issuing patents on obvious inventions and is likely to be unnecessarily detrimental to competition." Chapter 4 at p. 15.

[8] National Research Council, *A Patent System for the 21st Century* 62 (2004) (Stephen A. Merrill, Richard C. Levin, & Mark B. Myers (eds)) (Report of the Committee on Intellectual Property Rights in the Knowledge-Based Economy) <http://books.nap.edu/catalog/10976.html> [hereafter "NRC Report"].

> methods, where the common general knowledge of practitioners is not fully described in published literature likely to be consulted by patent examiners, another method of determining the state of knowledge needs to be employed.[9]

In reaching its conclusion, the NRC study relied on a rising tide of scholarly opinion:

> [A] number of legal scholars view the evolution of the law over the last generation as reducing the size of the step required for patentability under the non-obviousness standard and as allowing the issuance of patents on obvious inventions.[10]

---

[9] Richard C. Levin (President, Yale Univ.) & Mark B. Myers (Wharton School, Univ. of Pennsylvania), Statement Before the Subcommittee on Intellectual Property, Senate Committee on the Judiciary, *Hearings on Perspectives on Patents*, April 25, 2005, <http://judiciary.senate.gov/testimony.cfm?id=1475&wit_id=4217>.

[10] NRC Report at 61. The works cited by this section of the report were (NRC citation form retained):

> Barton, J. (2003). "Non-obviousness." *IDEA: The Journal of Law and Technology* 43:475.
>
> Desmond, R. (1993). "Nothing Seems Obvious to the Court of Appeals for the Federal Circuit: The Federal Circuit, Unchecked by the Supreme Court, Transforms the Standard of Obviousness Under the Patent Law," *Loyola of Los Angeles Law Review* 26:455-490.
>
> Kastriner, L. (1991). "The Revival of Confidence in the Patent System," *Journal of the Patent and Trademark Office Society* 73:5-23.
>
> Lunney, G. (2001). E-Obviousness." *Michigan Telecommunications and Technology Law Review* 7(363):363-421. Available at http://www.mttlr.org/volseven/LunneytypeRE-PDF.pdf.
>
> Merges, R. (1999). "As Many as Six Impossible Patents Before Breakfast: Property Rights for Business Concepts and Patent System Reform." *Berkeley Technology Law Journal* 14:578-615.
>
> Vermont, S. (2001). "A New Way to Determine Obviousness: Applying the Pioneer Doctrine to 35 U.S.C. § 103(A)." *AILPA Quarterly Journal* 29(Summer):375-444.

Leading economics and business scholars concur:

> As a result of legal and administrative changes made between 1982 and 1990, the PTO has become so overtaxed, and its incentives have become so skewed toward granting patents, that the tests for novelty and non-obviousness that are supposed to ensure that the patent monopoly is granted only to true inventors have become largely non-operative. [11]

Surely, the attention and concern given this issue by so many prestigious and disinterested experts is a powerful indication that it should also command the attention of this Court.

III. The Standard Applied by the Federal Circuit Causes Harm

That the assessment of obviousness becomes contentious during a period of rapid technological change should not surprise. Human minds strike sparks from each other, and each innovation adds a new element for the creative to consider, and creates additional possible combinations with existing technologies. Such combinations are, by definition, novel. The question for patent law is whether such a combination is nonobvious, whether it is sufficiently beyond the routine competencies of practitioners in the field as to justify turning it into a property right.

In making this determination, two types of error are possible. One is that a patent will be denied that should have been granted; the other, that a patent is granted when anyone adequately skilled in the field, confronted with the problem solved by the novelty, would have come up with the same idea.

---

[11] Adam B. Jaffe & Josh Lerner, *Innovation and Its Discontents: How Our Broken Patent System is Endangering Innovation and Progress, and What To Do About It* 34-35 (Princeton Univ. Press 2004).

Obviously (no pun intended), there is a gray area, where the outcome is not completely certain. It is fair to say that the Federal Circuit's test, which requires, in essence, documented and precise proof of "teaching-suggestion-motivation," defines the lower bound of that gray area. That is, any novelty that fails this test is obvious within the meaning of the patent law, beyond doubt, because prior practitioners already pointed it out.

However, some innovations might still be properly classified as obvious within the meaning of the statute even though prior writers have *not* pointed them out with precision, as this Court said repeatedly in its line of opinions starting with *Graham v. John Deere*[12] and ending with *Sakraida*.[13] The fact that the solution, in its exact form, had not been foreshadowed by prior writers may be indicative, but it is not conclusive.

> A patent for a combination which only unites old elements with no change in their respective functions . . . obviously withdraws what already is known into the field of its monopoly and diminishes the resources available to skillful men . . . .[14]

Indeed, critics of the Federal Circuit standard note that, in many fields, no one bothers to publish the obvious; in others, such as software or business methods, there may be no strongly established publication culture, or no long history of formal publications.[15] In yet others, practices may be adapted

---

[12] *Graham v. John Deere Co.*, 383 U.S. 1 (1966).

[13] *Sakraida v. Ag Pro, Inc.*, 425 U.S. 273 (1976).

[14] *Sakraida* at 281, quoting *Great A. & P. Tea Co. v. Supermarket Corp.*, 340 U.S. 147, 152 (1950) (ellipses in *Sakraida*).

[15] FTC Report, Chapter 4 at p. 40 (describing factors complicating the nonobviousness inquiry for business methods, including "the absence of a drive to publish within business method fields (unlike, for example, the sciences), and the fact that commercial practices in question often only exist in the 'heads of business person.'"); Chapter 5 at p. 7 (noting tes-

from a different context, a phenomenon particularly common in the shift of retailing from bricks-and-mortar to the Internet.

The Federal Circuit's test says, in essence, that all doubtful cases, all cases in the gray area, will be decided in favor of patentability. In other words, it has decided to run zero risk of rejecting a meritorious claim even at the cost of accepting numerous non-meritorious patents.

This is not sensible doctrine. Nor is it in accord with the statutory language or the precedents of this Court.

It also has the pernicious effect of preventing the USPTO and even Congress (unless it amends the "obviousness" standard itself, which would have major ramifications) from adopting administrative remedies that would reduce errors of *both* kinds. Re-examinations, reviews, post-grant challenges, and other devices are under active consideration. But under the Federal Circuit standard, none of these would allow PTO to reject any patent for obviousness unless it could find a document suggesting the solution.

The defects of such a doctrine may well be illustrated by the notorious Patent 6,368,227, "Method of Swinging on a Swing,"[16] obtained by a five-year old whose parent happened to be a patent lawyer. It is also called the "sideways swinging" patent, because that is what it covers—the idea that a swing can be made to move sideways as well as back and forth by pulling on the chains in a particular way.

The Patent Commissioner ordered a re-examination of the '227 patent on May 21, 2002,[17] and ultimately PTO found

---

timony that prior art problems are particularly hard to discover "in fields characterized by limited or abstract patent disclosures or lacking a culture favoring non-patent publication.")

[16] United States Patent No. 6,368,227, Method of Swinging on a Swing. Filed Nov. 17, 2000; Granted April 9, 2002. (Steven Olson)

[17] USPTO, Official Gazette Notices, July 2, 2002,

sufficient prior art in patents granted in 1939, 1943, and 1969 to result in its invalidation.[18] But the case ought never to have gotten so far; scarce patent-examiner hours and public resources had to be expended to officially recognize the obvious.[19] The difficulty the office faced resulted from the fact that the Federal Circuit's standard forbade the examiners to take notice of what, literally, any child would know. As a newspaper report on the matter said, "The patent office is searching for documented proof that children have always powered their swings by pulling on the chains. Then, and only then, will it kill the patent as quietly as possible."[20]

Had USPTO been unable to find *written* proof of something known to all, then under the Federal Circuit test the patent would have stood. "[D]eficiencies of the cited references cannot be remedied by the Board's general conclusions about what is 'basic knowledge' or 'common sense.'"[21] "'Common knowledge and common sense,' even if assumed

---

[18] Reexamination Certificate (4803rd), Method of Swinging on a Swing. Issued July 1, 2003.

[19] On reexamination, USPTO found three relevant prior patents, including one granted in 1939 on a device that boasted an ability to enable "various motions and movements of the seat, such as horizontal, circular, whirling, gyratory, oval, and oscillating, thereby creating much more amusement and pleasure than is obtained by the ordinary lawn swing." United States Patent No.2,146,045, Amusement Swing, Filed July 2, 1936; Granted Feb. 7, 1939 (S. W. Zippler), cited in Reexamination Certificate (4803rd), Method of Swinging on a Swing. Issued July 1, 2003. The strong implication is that the desirability of such motions, and presumably their attainability on a conventional two-ropes-on-a-tree-limb swing, were well-known prior to 1939.

[20] David Streitfeld, "Note: This Headline is Patented," *Chicago Tribune* (Online Edition), Feb. 7, 2003 (unpaginated) <http://www.chicagotribune.com/technology/local/chi-0302,0,7319176.story>.

[21] *In re Zurko*, 258 F.3d 1379, 1385 (Fed. Cir. 2001).

to derive from the agency's expertise, do not substitute for authority when the law requires authority."[22]

In the swing patent case, ultimately, the PTO reached the sensible result. But the Federal Circuit decisions present an obstacle to the office's doing so in a significant number of cases. For example, in 1999, the Federal Circuit reversed the PTO's rejection of a patent application for orange trash bags with jack-o-lantern faces.[23] A prior art search had turned up instructions for a children's craft project involving the drawing of pumpkin faces on large orange bags. But this was not sufficient, because the instructions referred to paper bags, not to trash bags.

The Federal Circuit's motivation in this case and others is a dread of "the insidious effect of a hindsight syndrome;"[24] the court is concerned that there must be objective evidence of obviousness. Such concern is certainly legitimate, but "objective" surely need not mean that instructions for the claimed invention must always be set out in some writing. There are other ways to avoid the problem of unduly subjective tests and hindsight, such as a "second look" by other patent examiners, review boards, and by giving patent examiners better access to experts qualified as to testify as to the capabilities of someone skilled in the art in question.

The Federal Circuit's one-way ratchet in favor of patentability will have deleterious effects on the whole innovation system. Entrepreneurs will devote their efforts not to solving problems but to putting together new combinations of old elements in the hopes that some one of them will turn out to be a future barrier to someone who is trying to solve a

---

[22] *In re Lee*, 277 F.3d 1338, 1345 (Fed. Cir. 2002).

[23] *In re Dembiczak*, 175 F. 3d 994 (Fed. Cir. 1999).

[24] *Id.* at 999.

problem, and thus a turnstile into which cash payments must be inserted. The term "tollkeepers" is used.

Another metaphor heard in conversations about the issue is that entrepreneurs are scattering patents like landmines, hoping that every once in a while the genuine innovators will step on one. Such actions are a misdirection of technical resources, and a barrier to desirable innovation. They also greatly increase the transaction costs of the system without any compensating incentives for creativity.

Yet another form of harm from an overly-generous interpretation of the nonobvious standard is more subtle: Over-patenting undermines the basic justifications for the patent system, and encourages those, and they are many, who would eliminate or hamstring the system of property rights in intellectual creations. As noted earlier, PFF is a fierce defender of these rights—it supports the content industries in *Grokster* [25]—and it is precisely this perspective that leads us to emphasize that these rights must be appropriately defined and limited.

Concern for maintaining the legitimacy of the system is particularly acute in the context of international affairs. Some in the less-developed world see the patent system, and intellectual property generally, as a mechanism by which the developed world extracts tribute from them.[26] To the extent

---

[25] *Brief of* Amicus Curiae *Progress and Freedom Foundation in Support of Petitioner*, Metro-Goldwyn-Mayer Studios v. Grokster, Ltd., *cert. granted*, __U.S.__ (2004) (No. 04-480) (Brief filed: Jan. 24, 2005).

[26] *See, e.g., Statement by India at the Inter-Sessional Intergovernmental Meeting on a Development Agenda for WIPO*, April 11-13, 2005, available at http://weblog.ipcentral.info/archives/2005/04/more_wipo_india.html ("Given the huge asymmetry between developed countries and developing countries, the total absence of any mandatory cross-border resource transfers or welfare payments, and the absence of any significant domestic recycling of the monopoly profits of foreign IP rights holders, the case for strong IP protection in developing countries is without any

that the system nurtures technological innovation that is then shared with the less-developed nations, and to the extent that the system helps them develop IP industries of their own, such a view is ludicrous. But if the U.S. patent system agrees to assertions of dominion over inventions that are not worthy innovations, and that would indeed by found quickly by experts in other parts of the world, this charge attains real bite.

IV. Solutions are Possible

As the Petition requests, this Court should reinvigorate its line of cases stemming from *Graham v. Deere*. But it can also look further back for guidance. There are historical antecedents for the current dilemma, and precedents for its resolution, during the late 19th century, as described by railroad historian Steven W. Usselman.[27] Then, as now, explosive technological, financial, and institutional change created a climate of creativity. Then, as now, complaints of overreaching and fears of gridlock abounded. Then, as now, the concept of "obviousness" was a puzzle—what was truly new and what was within the grasp of anyone skilled in the art, only some grasped it a little more quickly than others?

These issues were bitterly fought for years, and this Court came down on the side of common sense, in *Atlantic Works v. Brady*, per Mr. Justice Bradley:

> The process of development in manufactures creates a constant demand for new appliances, which the skill of ordinary head-workmen and engineers is generally ade-

---

economic basis. Harmonization of IP laws across countries is, clearly, intended to serve the interests of rent seekers in developed countries rather than that of the public in developing countries.")

[27] Steven W. Usselman, *Regulating Railroad Innovation: Business, Technology, and Politics in America, 1840-1920*, pp. 143-176 (Cambridge Univ. Press 2002).

quate to devise, and which, indeed, are the natural and proper outgrowth of such development. Each forward step prepares the way for the next, and each is usually taken by spontaneous trials and attempts in a hundred different places. To grant a single party a monopoly of every slight advance made, except where the exercise of invention, somewhat above ordinary mechanical or engineering skill, is distinctly shown, is unjust in principle and injurious in consequences.

The design of the patent laws is to reward those who make some substantial discovery or invention, which adds to our knowledge and makes a step in advance in the useful arts. Such inventors are worthy of all favor. It was never the object of those laws to grant a monopoly for every trifling device, every shadow of a shade of an idea, which would naturally and spontaneously occur to any skilled mechanic or operator in the ordinary progress of manufactures. Such an indiscriminate creation of exclusive privileges tends rather to obstruct than to stimulate invention. *It creates a class of speculative schemers who make it their business to watch the advancing wave of improvement, and gather its foam in the form of patented monopolies, which enable them to lay a heavy tax upon the industry of the country, without contributing anything to the real advancement of the arts.* It embarrasses the honest pursuit of business with fears and apprehensions of concealed liens and unknown liabilities to lawsuits and vexatious accountings for profits made in good faith. [Emphasis added.][28]

---

[28] *Atlantic Works v. Brady*, 107 U.S. 192, 199-200 (1882). It should be noted that the enactment of section 103 of the Patent Act in 1952, which codified an "obviousness" standard for the first time, is sometimes taken to have been intended to reverse the older, more stringent judicial standards of "obviousness." *See, e.g.* Irah H. Donner, *Combatting Obviousness Rejections Under 35 U.S.C. Section 103*, 6 Alb. L.J. Sci. & Tech. 159, 163 (1996). But it was unlikely that it was intended to uproot all of the old judicial doctrines entirely, particularly since the statute did not expressly repudiate them and indeed recognizes the legitimate need for

The effective application of the limitation that innovations are patentable only if they are nonobvious is vital to the effectiveness of the patent system in fulfilling its constitutional function of "promot[ing] the Progress of Science and useful Arts." The goal is to create incentives for inventors to solve problems (hence the utility requirement) in new ways, not to reward them for successfully gaming the system, for "watch[ing] the advancing wave of improvement, and gather[ing] its foam in the form of patented monopolies," in Mr. Justice Bradley's phrase.

To the extent that an invention is "the foam" on the "advancing wave," and within the probable ken of any skilled artisan who addresses a problem, the grant of a patent is not necessary to foster the discovery. It will, by definition, be found when the problem which it solves becomes important enough to engage serious attention. And there is no reason for the system to encourage investment in innovations that develop solutions that may or may not be needed in the future. If the problem is *not* sufficiently pressing to engage the present attention of those skilled in the art, then it shouldn't be the subject of inventive resources.

Nor, in such cases, is a patent necessary to fulfill another important function of the system: to encourage disclosure of a technology that would otherwise remain secret. Nothing that is "foam" on the "advancing wave" will remain secret for long.

---

something more than a mechanical inquiry into prior art. There is no need for the Court to restore the pre-1952 case law requiring a flash of inventive genius for a patent's validity to be upheld in order to recognize that the Federal Circuit has gone much too far in the other direction.

V. This Case Presents a Good Vehicle for Reinvigorating the Nonobviousness Criterion

This case is a particularly attractive vehicle for this Court to use in addressing this serious need for a proper delineation of nonobviousness. While the principle is of particular importance in the growing high tech areas, such as software and biotech, it is extremely difficult for laypersons to grasp the issues in such cases.

Consequently, an explication of obviousness in such a context would be a difficult pedagogical exercise, and would be unlikely to produce a result that could be easily extrapolated to other areas.

On the other hand, every schoolchild knows what an accelerator pedal is. Therefore, this case provides an ideal context for the discussion of the principles involved. Those who are expert in more arcane technologies will then be able to extrapolate the application of the principles to those situations, whereas an explanation wrapped up in the details of software or biotech would be very difficult to reverse engineer back to its application to mechanical devices.

CONCLUSION

For the above-stated reasons, the Court should accept this case for review.

Respectfully submitted,

JAMES V. DELONG *
SOLVEIG SINGLETON
THE PROGRESS & FREEDOM FOUNDATION
1401 H St., NW
Suite 1075
Washington, DC 20005
(202) 289-8928

* Counsel of Record

May 12, 2005

MOTION FILED

MAY 1 2 2005

(3)

No. 04-1350

IN THE
Supreme Court of the United States

KSR INTERNATIONAL CO.,
Petitioner,

v.

TELEFLEX INC. and
TECHNOLOGY HOLDING CO.,
Respondents.

On Petition For Writ of Certiorari to the United States Court of Appeals for the Federal Circuit

MOTION FOR LEAVE TO FILE AMICUS CURIAE BRIEF AND BRIEF OF TWENTY-FOUR INTELLECTUAL PROPERTY LAW PROFESSORS AS *AMICI CURIAE* IN SUPPORT OF PETITIONER

KATHERINE J. STRANDBURG
Assistant Professor of Law
DEPAUL UNIVERSITY
COLLEGE OF LAW
25 East Jackson Boulevard
Chicago, IL 60604
(312) 362-8536

ROBERT BRAUNEIS*
Associate Professor of Law
THE GEORGE WASHINGTON
UNIVERSITY LAW SCHOOL
2000 H Street, NW
Washington, DC 20052
(202) 994-6138

**Counsel of Record for Amici Curiae*

(List of *Amici Curiae* continues on inside cover)

MARGO BAGLEY
Associate Professor of Law
EMORY UNIVERSITY
SCHOOL OF LAW
1301 Clifton Road
Atlanta, GA 30322

JAMES BESSEN
Lecturer in Law
BOSTON UNIVERSITY
SCHOOL OF LAW
765 Commonwealth Avenue
Boston, MA 02215

MICHAEL A. CARRIER
Associate Professor of Law
RUTGERS UNIVERSITY SCHOOL OF LAW - CAMDEN
217 North Fifth Street
Camden, NJ 08102

ROCHELLE COOPER DREYFUSS
Pauline Newman Professor of Law
NEW YORK UNIVERSITY
SCHOOL OF LAW
40 Washington Square South
New York, NY 10012

CHRISTINE HAIGHT FARLEY
Associate Professor of Law
AMERICAN UNIVERSITY
WASHINGTON COLLEGE OF LAW
4801 Massachusetts Avenue, NW
Washington, DC 20016

CYNTHIA M. HO
Associate Professor of Law
and Vickrey Research Professor
LOYOLA UNIVERSITY CHICAGO
SCHOOL OF LAW
One East Pearson Street
Chicago, IL 60611

TIMOTHY R. HOLBROOK
Assistant Professor of Law
CHICAGO-KENT
COLLEGE OF LAW
565 W. Adams St.
Chicago, IL 60661

PETER JASZI
Professor of Law
AMERICAN UNIVERSITY
WASHINGTON COLLEGE OF LAW
4801 Massachusetts Avenue, NW
Washington, DC 20016

JAY P. KESAN
Professor of Law
UNIVERSITY OF ILLINOIS
COLLEGE OF LAW
504 East Pennsylvania Avenue
Champaign, IL 61820

MARK A. LEMLEY
William H. Neukom
Professor of Law
STANFORD LAW SCHOOL
Crown Quadrangle
Stanford, CA 94305

GLYNN S. LUNNEY, JR.
Professor of Law
TULANE UNIVERSITY
SCHOOL OF LAW
Weinmann Hall
6329 Freret Street
New Orleans, LA 70118-6231

RONALD J. MANN
Ben H. & Kitty King Powell
Chair in Business &
Commercial Law
UNIVERSITY OF TEXAS SCHOOL OF LAW
727 E. Dean Keeton Street
Austin, TX 78705

ROBERT P. MERGES
Wilson Sonsini Goodrich &
Rosati Professor of Law
and Technology
BOALT HALL SCHOOL OF LAW
UNIVERSITY OF CALIFORNIA,
BERKELEY
Berkeley, CA 94720

KIMBERLY A. MOORE
Professor of Law
GEORGE MASON UNIVERSITY
SCHOOL OF LAW
3301 Fairfax Drive
Arlington, VA 22201

JANICE M. MUELLER
Professor of Law
UNIVERSITY OF PITTSBURGH
SCHOOL OF LAW
3900 Forbes Avenue
Pittsburgh, PA 15260

JOSEPH SCOTT MILLER
Associate Professor of Law
LEWIS & CLARK LAW SCHOOL
10015 S.W. Terwilliger Blvd.
Portland, Oregon 97219

CRAIG A. NARD
Professor of Law
CASE WESTERN RESERVE
UNIVERSITY SCHOOL OF LAW
11075 East Blvd.
Cleveland, OH 44106

MALLA POLLACK
Visiting Professor
UNIVERSITY OF IDAHO
COLLEGE OF LAW
6th & Rayburn
Moscow, ID 83843

ARTI K. RAI
Professor of Law
DUKE LAW SCHOOL
Science Drive and
Towerview Road
Durham, NC 27708

PAMELA SAMUELSON
Chancellor's Professor of Law
BOALT HALL SCHOOL OF LAW
UNIVERSITY OF CALIFORNIA,
BERKELEY
Berkeley, CA 94720

JOSHUA SARNOFF
Practitioner-in-Residence
AMERICAN UNIVERSITY
WASHINGTON COLLEGE OF LAW
4801 Massachusetts Avenue, NW
Washington, DC 20016

JOHN R. THOMAS
Professor of Law
GEORGETOWN UNIVERSITY LAW
CENTER
600 New Jersey Avenue, NW
Washington, DC 20001

MOTION FOR LEAVE TO FILE AMICUS BRIEF

Pursuant to Rule 37.3(b) of the Rules of the Supreme Court of the United States, Robert Brauneis, Katherine Strandburg, Margo Bagley, James Bessen, Michael A. Carrier, Rochelle Cooper Dreyfuss, Christine Haight Farley, Cynthia M. Ho, Timothy R. Holbrook, Peter Jaszi, Jay P. Kesan, Mark A. Lemley, Glynn S. Lunney, Jr., Ronald J. Mann, Robert P. Merges, Kimberly A. Moore, Janice M. Mueller, Joseph Scott Miller, Craig A. Nard, Malla Pollack, Arti K. Rai, Pamela Samuelson, Joshua Sarnoff, and John R. Thomas (collectively "Twenty-Four Intellectual Property Law Professors") hereby request leave to file the accompanying *amicus curiae* brief. This brief is submitted in support of the petition for writ of certiorari to the Court of Appeals for the Federal Circuit. Petitioner KSR International Co. has consented to the filing of this brief. Respondents Teleflex Inc. and Technology Holding Co. have not consented.

As set forth in the accompanying brief, the Twenty-Four Intellectual Property Law Professors teach and write about intellectual property at twenty different law schools within the United States, and have a deep interest in the proper interpretation and application of intellectual property law.

The Twenty-Four Intellectual Property Law Professors are greatly concerned that the Federal Circuit's incorrect interpretation of the obviousness standard of Section 103 of the Patent Act, 35 U.S.C. §103, results in unnecessary and socially costly grants of patent rights on obvious extensions of existing technologies. Accordingly, the Twenty-Four Intellectual Property Law Professors respectfully request leave to file the accompanying *amicus curiae* brief.

Respectfully submitted,
Robert Brauneis
Counsel of Record for
Twenty-Four Intellectual Property Law Professors

TABLE OF CONTENTS

	Page
TABLE OF CONTENTS	i
TABLE OF AUTHORITIES	ii
INTEREST OF AMICI CURIAE	1
REASONS FOR GRANTING THE WRIT	2
I. The Federal Circuit's Rule that Patent Obviousness Can Be Shown Only By Producing a "Teaching, Suggestion, or Motivation" to Combine Prior Art Is Contrary to the Approach Mandated by Statute and Inconsistent with this Court's Precedent	2
II. The Federal Circuit's "Suggestion Test" Sets Bad Patent Policy	10
III. This Case is an Excellent Vehicle for Addressing the Conflict Between this Court's Precedent and the Federal Circuit's "Suggestion Test"	15
CONCLUSION	18

TABLE OF AUTHORITIES

Page

Cases:

ACS Hospital Systems, Inc. v. Montefiore Hospital, 732 F.2d 1572 (Fed. Cir. 1984) 4

Anderson's-Black Rock v. Pavement Co., 396 U.S. 57 (1969) 4

Bonito Boats, Inc. v. Thunder Craft Boats, Inc., 489 U.S. 141 (1989) 3

Brown & Williamson Tobacco Corp. v. Philip Morris Inc., 229 F.3d 1120 (Fed. Cir. 2000) 15

C.R. Bard, Inc. v. M3 Systems, 157 F.3d 1340 (Fed. Cir. 1998) 15

In re Dembiczak, 175 F.3d. 994 (Fed. Cir. 1999) 14

Dickinson v. Zurko, 527 U.S. 150 (1999) 8

Dann v. Commissioner, 425 U.S. 219 (1976) 5

In re Geiger, 815 F.2d 686 (Fed. Cir. 1987) 4

Graham v. John Deere, 383 U.S. 1 (1966) 3, 4, 5, 6, 7, 9

Hilton Davis Chemical Co. v. Warner-Jenkinson Co., Inc., 62 F.3d 1512 (Fed. Cir. 1995) 9

Holmes Group, Inc. v. Vornado Air Circulations Sys., Inc., 535 U.S. 826 (2002) 17

TABLE OF AUTHORITIES—Continued

Page

John Zink Co. v. National Airoil Burner Co., 613 F.2d 547 (5th Cir. 1980) 2

Karsten Mfg. Corp. v. Cleveland Golf Co., 242 F.3d 1376 (Fed. Cir. 2001) 15

In re Kotzab, 217 F.3d 1365 (Fed. Cir. 2000) 6

In re Lee, 277 F.3d 1338 (Fed. Cir. 2002) 8

Miltimore Sales, Inc. v. International Rectifier, Inc., 119 Fed. Appx. 697 (6th Cir. 2004) 17

In re Oetiker, 977 F.2d 1443 (Fed. Cir. 1992) 4

Pro-Mold and Tool Co., Inc. v. Great Lakes Plastics, Inc., 75 F.3d 1568 (Fed. Cir. 1996) 15

In re Raynes, 7 F.3d 1037 (Fed. Cir. 1993) 4

Ruiz v. A.B. Chance Co., 234 F.3d 654 (Fed. Cir. 2000) 14

Sakraida v. Ag Pro, Inc., 425 U.S. 273 (1976) 5

In re Sang Su Lee, 277 F.3d 1338 (Fed. Cir. 2002) 15

TABLE OF AUTHORITIES—Continued

Page

Teleflex, Inc. v. Ficosa North America Corp., 299 F.3d 1313 (Fed. Cir. 2002) 17

United States v. Adams, 383 U.S. 39 (1965) 4

Vulcan Engineering Co., Inc. v. Fata Aluminium, Inc., 278 F.3d 1366 (Fed. Cir. 2002) 15

Winner International Royalty Corp. v. Wang, 202 F.3d 1340 (Fed. Cir. 2000) 15

Constitution and Statutes:

U.S. Const., art. I, §8, cl. 8 10

35 U.S.C. §101 2

35 U.S.C. §102 2

35 U.S.C. §103 ..... 2, 3, 5, 6

Legislative Materials:

H. R. Rep. No. 82-1923 (1952) 4

S. Rep. No. 82-1979 (1952) 4

TABLE OF AUTHORITIES—Continued

Page

Other:

Margo A. Bagley, *E-Commerce and Equivalence: Defining the Proper Scope of Internet Patents*, 7 Mich. Telecomm. & Tech. L. Rev. 253 (2000-2001) 12

John H. Barton, *Non-Obviousness*, 43 IDEA 475 (2003). 13

Dan L. Burk & Mark Lemley, *Is Patent Law Technology-Specific?*, 17 Berkeley Tech. L.J. 1155 (2002) 12

John F. Duffy, *Rethinking the Prospect Theory of Patents*, 71 U. Chi. L. Rev. 439 (2004) 17

John F. Duffy, *Harmony and Diversity in Global Patent Law*, 17 Berkeley Tech. L. J. 685 (2002) 17

John F. Duffy, *The Festo Decision and the Return of the Supreme Court to the Bar of Patents*, 2002 Sup. Ct. Rev. 273 17

John F. Duffy, *On Improving the Legal Process of Claim Construction: Administrative*

TABLE OF AUTHORITIES—Continued

Page

Alternatives, 2 Wash U. J. L. & Pol'y 109 (2000) 17

Rebecca Eisenberg, *Obvious to Whom? Evaluating Inventions from the Perspective of PHOSITA*, 19 Berkeley Tech. L.J. 885 (2004) 6, 11

Federal Trade Commission, *To Promote Innovation: The Proper Balance of Competition and Patent Law and Policy* (2003) 9

Bronwyn H. Hall and Dietmar Harhoff, *Post-Grant Reviews in the U.S. Patent System — Design Choices and Expected Impact*, 19 Berkeley Tech. L.J. 989 (2004) 13

Michael A. Heller & Rebecca S. Eisenberg, *Can Patents Deter Innovation? The Anti-commons in Biomedical Research*, Science, May 1, 1998, at 698 13

Glynn S. Lunney, Jr., *E-Obviousness*, 7 Mich. Telecomm. Tech. L. Rev. 363 (2000) 10

Robert P. Merges, *Uncertainty and the Standard of Patentability*, 7 High Tech. L. J. 1 (1993) 14

TABLE OF AUTHORITIES—Continued

Page

Robert Patrick Merges & John Fitzgerald Duffy, *Patent Law and Policy: Cases and Materials* (3d ed. 2002) 17

National Research Council, *A Patent System for the 21st Century* (2004) 11

Arti K. Rai, *Allocating Power over Fact-Finding in the Patent System*, 19 Berkeley Tech. L. J. 907 (2004) 8

Jerome R. Ravetz, *Scientific Knowledge and its Social Problems* (1971) 11

Giles S. Rich, *The Principles of Patentability*, 42 J. Pat. Off. Soc'y 75 (1960) 3

Carl Shapiro, *Navigating the Patent Thicket: Cross Licensing, Patent Pools, and Standard Setting*, in *Innovation Policy and the Economy* (Adam Jaffe et al., eds., 2001) 13

John R. Thomas, *Formalism at the Federal Circuit*, 52 Am. L. Rev. 771 (2003) 11

INTEREST OF THE *AMICI CURIAE*

Amici Curiae Robert Brauneis, Katherine Strandburg, Margo Bagley, James Bessen, Michael A. Carrier, Rochelle Cooper Dreyfuss, Christine Haight Farley, Timothy R. Holbrook, Peter Jaszi, Jay P. Kesan, Mark A. Lemley, Glynn S. Lunney, Jr., Ronald J. Mann, Robert P. Merges, Kimberly A. Moore, Janice M. Mueller, Joseph Scott Miller, Craig A. Nard, Malla Pollack, Arti K. Rai, Pamela Samuelson, Joshua Sarnoff and John R. Thomas (collectively "Twenty-Four Intellectual Property Law Professors") respectfully submit this brief in support of petitioner, KSR International Co., encouraging the grant of a writ of certiorari to review the judgment of the United States Court of Appeals for the Federal Circuit, because that judgment stems from the application of an obviousness test that is inconsistent with the patent statute, with this Court's precedent, and with good patent policy.[1]

Amici are law professors who teach and write about intellectual property at twenty different law schools within the United States and have an interest in the proper interpretation and application of intellectual property law. *Amici* believe that patent law should provide incentives to search for truly new technological solutions. In contrast, the Federal Circuit's incorrect interpretation of the obviousness standard, as applied in this case, provides incentives for seeking patent rights on obvious extensions of existing technologies. The patenting of obvious extensions of existing technologies has high social costs and is contrary to the Constitutional purpose of the patent system.

---

[1] Pursuant to this Court's Rule 37.6, *amici* represent that this brief was not authored in whole or in part by counsel for any party, and that no person or entity other than *amici* and their respective educational institutions has made a monetary contribution to the preparation or submission of this brief. The names of the educational institutions are provided for identification purposes only.

This case provides the Court with an opportunity to overturn the Federal Circuit's much-criticized current approach to non-obviousness, which is at odds with the statutory language, inconsistent with this Court's precedent, and contrary to the goals of the patent system. Unless this Court intervenes, countless applications and issued patents on obvious technologies will continue to burden the U.S. Patent and Trademark Office, the federal courts, and the public at large.

REASONS FOR GRANTING THE WRIT

I. The Federal Circuit's Rule that Patent Obviousness Can Be Shown Only By Producing a "Teaching, Suggestion, or Motivation" to Combine Prior Art Is Contrary to the Approach Mandated by Statute and Inconsistent with this Court's Precedent.

To implement the core patent policy of granting patents only on significant advances in knowledge, Congress chose a standard embodied in Section 103 of the Patent Act, which denies patent protection when "the subject matter as a whole would have been obvious at the time the invention was made to a person having ordinary skill in the art to which said subject matter pertains." 35 U.S.C. §103. The Court of Appeals for the Federal Circuit has developed a different, and lower, standard. Rather than focus on what the person of ordinary skill in the relevant art would find obvious, the Federal Circuit's test denies a patent only if there is evidence of a specific "suggestion, teaching, or motivation to combine the relevant prior art teachings in the manner claimed." App. at 6a (citing prior Federal Circuit authorities). This "suggestion test" is found neither in the Patent Act nor in this Court's relevant precedent.

To obtain protection under federal patent law, technological developments must meet three substantive requirements, which can be summarized as utility, novelty, and non-obviousness. *See* 35 U.S.C. §§101 (utility), 102 (novelty),

and 103 (non-obviousness). As this Court has recognized, "[b]oth the novelty and the nonobviousness requirements of federal patent law are grounded in the notion that concepts within the public grasp, or those so obvious that they readily could be, are the tools of creation available to all. They provide the baseline of free competition upon which the patent system's incentive to creative effort depends." *Bonito Boats, Inc. v. Thunder Craft Boats, Inc.*, 489 U.S. 141, 156 (1989). Because the novelty condition precludes patenting only if a claimed invention is completely anticipated by a single piece of prior art, the requirement of non-obviousness is the sole provision that fully implements the core notion of patent law that patents should be granted only for significant advances over previously known technology. Patents are awarded as "an inducement, to bring forth new knowledge." *Graham v. John Deere Co.*, 383 U.S. 1, 9 (1966). Thus, as articulated by one of the principal drafters of the 1952 Patent Act, only "the unobvious developments which would not occur spontaneously from the application of . . . ordinary skill" are patentable. Giles S. Rich, *The Principles of Patentability*, 42 J. Pat. Off. Soc'y 75, 81-82 (1960). Obvious developments "will be made anyway, without the 'fuel of interest' which the patent system supplies." *Id.* If patents are granted on obvious variations or combinations of what is already known, they needlessly impose the costs of exclusivity on the public.

The standard that Congress chose to implement the policy of requiring a significant advance over existing knowledge is embodied in Section 103 of the Patent Act. That section prohibits the issuance of patents on technological developments for which "the differences between the subject matter sought to be patented and the prior art are such that the subject matter as a whole would have been obvious at the time the invention was made to a person having ordinary skill in the art to which said subject matter pertains." 35 U.S.C. §103. As explained in the Congressional reports that

accompanied its passage, Section 103 was intended to codify "a condition which exists in the law and has existed for more than 100 years . . . . An invention which has been made, and which is new in the sense that the same thing has not been made before, may still not be patentable if the difference between the new thing and what was known before is not considered sufficiently great to warrant a patent." *Graham*, 383 U.S. at 14-15, quoting S. Rep. No. 82-1979 (1952) and H. R. Rep. No. 82-1923 (1952). Thus, Section 103 codified previous precedent adopting the practical requirement that the judgment of whether an advance is significant enough to warrant a patent must be made from the perspective of the person of ordinary skill in the art.

Over the past two decades, the Federal Circuit has gradually developed an obviousness test that departs from the statutory mandate to examine obviousness from the perspective of the "person having ordinary skill in the art." The Federal Circuit began to invalidate patents for obviousness only when challengers could present prior art of record that provided a "suggestion or incentive," *ACS Hospital Systems, Inc. v. Montefiore Hospital*, 732 F.2d 1572, 1577 (Fed. Cir. 1984), "teaching, suggestion or incentive," *In re Geiger*, 815 F.2d 686, 688 (Fed. Cir. 1987), "reason, suggestion, or motivation," *In re Oetiker*, 977 F.2d 1443, 1447 (Fed. Cir. 1992), or "teaching, suggestion or motivation," *In re Raynes*, 7 F.3d 1037, 1039 (Fed. Cir. 1993), to combine previously existing technologies. This case involves the application of a now-mature "suggestion test" that cannot be found anywhere in Section 103 or in any other part of the Patent Act.

This Court has directly addressed the issue of non-obviousness on several occasions, but none of its discussions give any basis for grafting a "suggestion test" onto the statutory language. *See Graham*, 383 U.S. at 17-18 (laying out the factors underlying the non-obviousness determination); *United States v. Adams*, 383 U.S. 39, 51-52 (1965) (upholding non-obviousness determination based in part on

expert skepticism about the invention); *Anderson's-Black Rock, Inc. v. Pavement Co.*, 396 U.S. 57, 62-63 (1969) (finding obviousness because "to those skilled in the art the use of the old elements in combination was not an invention by the obvious-nonobvious standard"); *Dann v. Commissioner*, 425 U.S. 219, 229-30 (1976) (noting that "[i]n making the determination of 'obviousness,' it is important to remember that the criterion is measured not in terms of what would be obvious to a layman, but rather what would be obvious to one 'reasonably skilled in [the applicable] art'" and holding that "the gap between the prior art and respondent's system is simply not so great as to render the system nonobvious to one reasonably skilled in the art") *Sakraida v. Ag Pro, Inc.*, 425 U.S. 273, 282 (1976) (finding claimed invention obvious where the "particular use of the assembly of old elements would be obvious to any person skilled in the art of mechanical application"). Since the Federal Circuit's adoption of its "suggestion test," this Court has not addressed the issue of non-obviousness.

As the Petitioner notes, numerous commentators have observed the inconsistency between the Federal Circuit's test and Supreme Court precedent. *See* Pet. for Cert. at 18-20 (citing authorities). Indeed, in its seminal interpretation of Section 103 of the Patent Act in *Graham*, this Court not only discussed the factors relevant to the determination of obviousness without once mentioning a "suggestion test," it also reversed an appellate court's finding of non-obviousness, despite the appellate court's conclusion that there was "nothing in the prior art suggesting [the] unique combination of these old features" in the claimed invention. *Graham*, 383 U.S. at 30. Thus, it would appear that that the Federal Circuit's "suggestion test" would have led to the opposite result in *Graham* itself.

Because the Federal Circuit's test relegates the "person having ordinary skill in the art" to the sidelines and looks almost entirely to the contents of the prior art references to

demonstrate obviousness, it strays far from the underlying statutory non-obviousness standard. The statutory requirement of non-obviousness is supposed to be separate from and additional to the statutory requirement of novelty. *See, e.g., Graham,* 383 U.S. at 14-15. Rather than focusing on what is *already present* in the prior art, the non-obviousness provision asks whether "the subject matter as a whole would have been obvious at the time the invention was made to a person having ordinary skill in the art," 35 U.S.C. §103, *in light of* all of the prior art. The Federal Circuit's requirement that the prior art *contain* a "suggestion to combine" blurs the distinction between novelty and non-obviousness and fails to follow the statutory mandate that obviousness be judged from the perspective which the "person having ordinary skill in the art" would bring to the prior art as a whole. As Professor Rebecca Eisenberg has noted:

> [The Federal Circuit] has all but ignored the statutory directive that judgments of nonobviousness be made from the perspective of the PHOSITA [person having ordinary skill in the art]. Today, PHOSITA sits on the sidelines of obviousness analysis. Courts consult PHOSITA on the scope, content, and meaning of prior art references but not on the ultimate question of whether the invention would have been obvious at the time it was made in light of the prior art.

Rebecca Eisenberg, *Obvious to Whom? Evaluating Inventions from the Perspective of PHOSITA*, 19 Berkeley Tech. L.J. 885, 888 (2004).

Although the Federal Circuit purports to recognize that suggestions to combine existing elements may be "implicit," *see, e.g., In re Kotzab,* 217 F.3d 1365, 1370 (Fed. Cir. 2000), its application of the standard for "implicit" suggestions continues to read the person having ordinary skill in the art or "PHOSITA" out of the obviousness inquiry. Explicit or implicit suggestions to combine may be found, according to the Federal Circuit: "1) in the prior art references them-

selves; 2) in the knowledge of those of ordinary skill in the art that certain references . . . are of special interest or importance in the field; or 3) from the nature of the problem to be solved, leading inventors to look to references relating to possible solutions to that problem." App. at 6a (citations omitted). The first option focuses entirely on what is in the prior art references. The second limits the PHOSITA to the role of a sort of reference librarian, assisting in locating appropriate prior art references but apparently incapable of applying them in light of his or her knowledge and skill.

At first glance, the third option — the "nature of the problem to be solved" — might appear to invoke the judgment of the PHOSITA as to obviousness. Again, however, the focus is on the prior art references; the nature of the problem serves only to motivate a search for references relating to the problem at hand. Indeed, the Federal Circuit's analysis in this case exemplifies the short shrift given to the person of ordinary skill in the art by this approach. Here, the District Court based its finding of a sufficient suggestion or motivation to combine references in part on the "nature of the problem to be solved." App. at 42a-43a. Nonetheless, the Federal Circuit rejected the District Court's findings because, as applied by the Federal Circuit, the "nature of the problem to be solved" provides a cognizable motivation to combine references only when "two prior art references address the precise problem that the patentee was trying to solve." App. at 12a. In this instance, the problems addressed by the references did not track the specifics of the patent at issue quite precisely enough. App. at 12a-13a. Despite lip service to the question whether the nature of the problem would have "led a person of ordinary skill in the art to combine the prior art teachings in the particular manner claimed," App. at 12a, the court's analysis in fact paid no attention to how such a person would have viewed the prior art references in light of the problem the *patentee* was trying to solve. Instead, the Federal Circuit focused entirely on whether the problem

addressed in the references was precisely the same as the problem addressed by the patent in suit. App. at 12a-13a. There is apparently no room for the possibility that a person of ordinary skill in the art might find it obvious to apply prior art technology to a problem slightly different from the problem articulated in the prior art reference.

While the "suggestion test" thus marginalizes the PHOSITA in obviousness determinations in litigation, it ensures that the PHOSITA has even less impact at the Patent and Trademark Office. Federal Circuit precedent makes clear that patent examiners cannot rely on common knowledge in the art or on their own technical knowledge in the art as a basis for rejecting patent applications. *See, e.g., In re Lee*, 277 F.3d 1338, 1345 (Fed. Cir. 2002) ("'Common knowledge and common sense,' even if assumed to derive from the agency's expertise, do not substitute for authority when the law requires authority.") (citation omitted). As a result, the Federal Circuit has forbidden the Patent and Trademark Office to deny a patent based on common knowledge in the art without pointing to specific evidence of a teaching, suggestion or motivation to combine the particular existing references.

Because the Patent and Trademark Office has limited ability in the context of an *ex parte* examination proceeding to collect evidence beyond what it can find in the written prior art, the Federal Circuit's approach severely limits the Patent and Trademark Office's ability to take into account the common knowledge of those in the art. *See* Arti K. Rai, *Allocating Power over Fact-Finding in the Patent System*, 19 Berkeley Tech. L. J. 907, 912-17 (2004) (making this point and arguing that the Federal Circuit's approach to examiner technical knowledge may be inconsistent with this Court's mandate of deference to agency factfinding as articulated in *Dickinson v. Zurko*, 527 U.S. 150 (1999)). By hobbling the Patent and Trademark Office in this way, the Federal Circuit has subverted this Court's command "that the primary

responsibility for sifting out unpatentable material lies in the Patent Office." *Graham*, 383 U.S. at 18. The inability of the Patent and Trademark Office to weed out obvious patents under the Federal Circuit's suggestion test is extremely serious for the health of the patent system, since, as this Court has recognized, "[t]o await litigation is — for all practical purposes — to debilitate the patent system." *Id.*

The Federal Trade Commission has also recognized the difficulties for a competitive economy that are posed by an inadequate standard of obviousness:

> Inventive processes typically involve judgment, experience, and common sense capable of connecting some dots. The suggestion test, rigidly applied, assumes away a PHOSITA's typical levels of creativity and insight and supports findings of nonobviousness even when only a modicum of additional insight is needed. . . . The *presence* of 'specific and definitive art references with clear motivation of how to combine those references' may confirm the obviousness of an invention. In contrast, the *absence* of such prior art references does not provide any evidence about whether a PHOSITA could have combined prior art references to achieve the invention, given the typical level of insight in that field.

Federal Trade Commission, *To Promote Innovation: The Proper Balance of Competition and Patent Law and Policy* (Oct. 2003), Chap. 4, at 14. (Emphasis added.)

In sum, the Federal Circuit's obviousness test all but requires both the Patent and Trademark Office and the courts to base their analyses on documentary evidence of obviousness which will often be unavailable both to the Patent and Trademark Office and to the courts. The test will thus allow patents to issue in many cases where combining pre-existing technologies would have been an obvious step for a person having ordinary skill in the art.

II. The Federal Circuit's "Suggestion Test" Sets Bad Patent Policy

The low standard for patentability that results from application of the "suggestion test" leads inevitably to the grant of patent rights to combinations of existing technological knowledge for which no patent incentive was needed. Such patents not only do not "promote the Progress of . . . useful Arts," *see* U.S. Const., art. I, §8, cl. 8, they have pernicious social effects. *Amici* are convinced that the "suggestion test" results in the issuance and enforcement of many such patents that should be declared invalid as obvious. *See, e.g.*, Glynn S. Lunney, Jr., *E-Obviousness*, 7 Mich. Telecomm. Tech. L. Rev. 363, 370-379 (2000) (presenting a statistical study showing a drop in Federal Circuit patent invalidations for obviousness, and identifying the Circuit's "suggestion" test as one of the causes).

The unnecessary patents resulting from the Federal Circuit's test lead to higher direct costs to consumers and higher transaction costs associated with the need to negotiate permission from additional patent owners in order to bring obvious combination technologies to market. The issuance of suspect patents also increases the litigation burden on the federal courts.

In addition, the availability of patents on obvious combinations overwhelms the Patent and Trademark Office with applications for patents on obvious combinations of previously existing technologies; promotes socially wasteful races to patent these obvious advances; and raises patent search costs for those seeking to combine existing technologies. Moreover, in attempting to find documentation of what is commonly known in the art, patent examiners and later litigants must waste time and resources searching for specific articulations of common, but largely tacit, knowledge.

Patent examiners and after-grant challengers will often be unable to find a specific "suggestion, teaching, or motivation" for a particular combination of existing elements, even if that combination is not innovative. In many cases, it would be so natural for a person of ordinary skill in the art to use two existing elements together in appropriate circumstances that no one would think of articulating explicitly the kind of "suggestion, teaching, or motivation" that the Federal Circuit requires. "Trained scientists, engineers and other practitioners are seldom so dull-witted as to unvaryingly require the specific, step-by-step combination of elements from the prior art." John R. Thomas, *Formalism at the Federal Circuit,* 52 Am. L. Rev. 771, 802 (2003).

Moreover, many aspects of ordinary skill in a technological art are not likely to find their way into a written record, either because such tacit knowledge is not amenable to verbal description or because practitioners are motivated to publish novel applications of their arts, not routine applications. *See* National Research Council, *A Patent System for the 21st Century* 90 (2004) ("[S]cientists, artisans, and creative people generally speaking strive to publish non-obvious information. So if it is obvious to those of skill in the art to combine references, it is unlikely that they will publish such information.") As Professor Eisenberg has noted, "[a]ctive practitioners of a technology bring more to a problem than may be found in written prior art, including training, judgment, intuition, and tacit knowledge acquired through field experience. Scientific and technological work involve the application of craft skills that are familiar to practitioners but defy explicit articulation." Eisenberg, *supra*, at 897-98, *citing* Jerome R. Ravetz, *Scientific Knowledge and its Social Problems* 75-76 (1971).

Obvious combination patents are particularly likely to issue in fast-moving technological areas in which the written prior art is unlikely to contain up-to-date expositions of obvious applications of new technologies. For example, every new

recording format – from cassette tapes to Compact Discs, Digital Versatile Discs, Mini Discs, and solid state storage – might present an opportunity for someone to claim "the combination" of a microphone with this new technology to enable the recording of sound waves in the air. When a new recording technology is first announced, no one will have yet articulated a specific "suggestion, teaching, or motivation" to combine it with a microphone, precisely because that particular technology is new. Yet that should not mean that the first person to articulate that combination in a patent application should get exclusive rights to the combination for 20 years.

Similarly, technological advances have given rise to numerous opportunities to computerize existing processes, many of which would likely have been obvious to those skilled in the art once the computer technology became available. A related problem of obvious applications of new technologies has also been noted in the biotechnology arena, where many have argued that methodological advances provided an obvious path to new results that should not themselves have been patentable. As Professors Dan L. Burk and Mark Lemley remark, "the Federal Circuit has bent over backwards to find biotechnological inventions nonobvious, even if the prior art demonstrates a clear plan for producing the invention." *Is Patent Law Technology-Specific?*, 17 Berkeley Tech. L.J. 1155, 1156 (2002).

Technological advances and expansive interpretations of the scope of patentable subject matter have also resulted in patents being issued in areas, such as software and business method patents, in which the common knowledge of the art has not traditionally been documented in easily accessible forms such as patents and academic publications. The Federal Circuit's emphasis on documentation of what is widely known in the art is particularly problematic for patenting in these areas. *See, e.g.*, Margo A. Bagley, *E-Commerce and Equivalence: Defining the Proper Scope of Internet Patents*, 7 Mich. Telecomm. & Tech. L. Rev. 253,

279-80 (2000-2001) (discussing the limited availability of documentary prior art in the areas of business methods and software).

The overpatenting that results from the Federal Circuit's "suggestion test" creates an unnecessary drag on innovation through higher prices to consumers and transaction costs associated with licensing and enforcing these unnecessary patents. Anyone who wants to use the combination of technologies will have to negotiate permission from and pay royalties not only to the owners of any patents on the individual elements, but also to the owner of the patent in the combination. The costs of patents that are unnecessary to promote innovation also include "the benefits lost when a course of research is foregone out of fear that a product cannot be produced without obtaining a license that may be unavailable. Even when a product is produced, there may be costs in restructuring a research program to design around existing patents." John H. Barton, *Non-Obviousness*, 43 IDEA 475, 494 (2003). When two or more parties can block the practical application of technology, the difficulty and social cost of developing that practical application increases significantly, raising the likelihood of "patent thickets." *See, e.g.*, Carl Shapiro, *Navigating the Patent Thicket: Cross Licensing, Patent Pools, and Standard Setting*, in *Innovation Policy and the Economy* (Adam Jaffe et al., eds., 2001); *see also* Michael A. Heller & Rebecca S. Eisenberg, *Can Patents Deter Innovation? The Anticommons in Biomedical Research*, Science, May 1, 1998, at 698-99.

In addition, anyone interested in combining any existing technologies must expend resources searching for possible patents on such combinations, whether or not such patents have issued. The low threshold of non-obviousness for combination patents also provides incentives to invest in socially wasteful efforts to patent run-of-the-mill combinations of previously known technologies. *See, e.g.*, Bronwyn H. Hall and Dietmar Harhoff, *Post-Grant Reviews in the U.S.*

Patent System — Design Choices and Expected Impact, 19 Berkeley Tech. L.J. 989, 992-1000 (2004) (discussing potential problems caused by low quality patents, presenting evidence of issuance of lower quality patents by U.S. Patent and Trademark Office, and relating the issuance of lower quality patents to the "suggestion" test for obviousness); Robert P. Merges, *Uncertainty and the Standard of Patentability*, 7 High Tech. L. J. 1, 19 (1993) (arguing that the non-obviousness standard should be high enough to motivate research in areas in which results are uncertain). In addition, it motivates true innovators to divert some of their resources towards identifying and claiming all possible combinations of their new technologies with existing technologies, to prevent others from getting patents that would block important and obvious applications of their technologies.

The Federal Circuit has explained its requirement of a specific "teaching, suggestion, or motivation" to combine by noting in a number of cases that a "rigorous application" of such a requirement is the best way to avoid the potential distortions of hindsight. App. at 6a-7a; *Ruiz v. A.B. Chance Co.*, 234 F.3d 654, 665 (Fed. Cir. 2000); *In re Dembiczak*, 175 F.3d. 994, 999 (Fed. Cir. 1999). Although *amici* do not deny the potential for hindsight bias, *amici* believe that the Federal Circuit's suggestion test simply does not solve the hindsight bias. Rather than capture the actual knowledge of those of skill in the art at the time a claimed combination of existing technology was made, it introduces its own hindsight bias, suggesting that skilled artisans should somehow have thought to articulate each obvious possibility in prior art references. This assumption simply does not reflect reality.

In sum, the predictable result of the availability of patents on obvious combinations of existing elements is that it becomes more difficult to bring the benefits of technology to society, thus undermining the ultimate goal of patent law.

III. This Case is an Excellent Vehicle for Addressing the Conflict Between this Court's Precedent and the Federal Circuit's "Suggestion Test."

The Federal Circuit has fully developed its rule that combinations of existing elements are nonobvious, and therefore patentable, unless some specific "teaching, suggestion, or motivation" to combine those elements is found in the prior art. Every active Federal Circuit judge has been a member of a panel that applied that rule in a decided case.[2] The Federal Circuit's decision not to publish the opinion in the instant case, resolving an appeal from a fully-reasoned, published District Court decision, is also a signal that the judges in that Circuit believe that the "teaching, suggestion, or motivation" requirement is settled law, and that its application should proceed as a matter of course. There is thus little possibility that the Federal Circuit will correct its position without this Court's intervention.

This case is an excellent vehicle for deciding whether the Federal Circuit's obviousness test is in accord with the Patent Act and with the Constitutional basis for the patent system. The case involves simple technologies; it is procedurally clean and ripe; and counsel on both sides are experienced and knowledgeable.

---

[2] *See, e.g.*, App. 1a (Judges Mayer, Schall, and Prost); *Vulcan Engineering Co., Inc. v. Fata Aluminium, Inc.*, 278 F.3d 1366 (Fed. Cir. 2002) (Judges Newman, Michel, and Lourie); *In re Sang Su Lee*, 277 F.3d 1338, 1343 (Fed. Cir. 2002) (Judges Newman, Clevenger, and Dyk); *Karsten Mfg. Corp. v. Cleveland Golf Co.*, 242 F.3d 1376, 1385 (Fed. Cir. 2001) (Judges Newman, Michel, and Plager); *Brown & Williamson Tobacco Corp. v. Philip Morris Inc.*, 229 F.3d 1120, 1124-25 (Fed. Cir. 2000) (Judges Clevenger, Bryson, and Linn); *Winner International Royalty Corp. v. Wang*, 202 F.3d 1340, 1348 (Fed. Cir. 2000) (Judges Michel, Rader, and Gajarsa); *In re Dembiczak*, 175 F.3d 994, 999 (Fed. Cir. 1999) (Judges Mayer, Michel, and Clevenger); *C.R. Bard, Inc. v. M3 Systems*, 157 F.3d 1340, 1352 (Fed. Cir. 1998) (Judges Mayer, Newman, and Bryson); *Pro-Mold and Tool Co., Inc. v. Great Lakes Plastics, Inc.*, 75 F.3d 1568, 1573 (Fed. Cir. 1996) (Judges Plager, Lourie and Rader).

There are two simple technologies at issue in this case. Both relate to an automobile driver's control of engine speed. One is an adjustable gas pedal. Such a pedal can be positioned so that it is closer or farther away from the driver's seat, accommodating shorter or taller drivers. The other is an electronic gas pedal position sensor. It senses the position of the gas pedal and reports that position by means of an electronic signal to a computer in the car, which then adjusts fuel and air flow to the car's engine. This electronic throttle control system replaces the older technique of mechanically linking the gas pedal directly to the carburetor.

Respondents do not claim to have invented either the adjustable gas pedal or the electronic gas pedal position sensor. Rather, they claim – in claim 4 of U.S. Patent No 6,237,565, the claim at issue in this litigation – to have invented, and to be entitled to exclusive patent rights to, the use of the combination of a particular prior art adjustable gas pedal together with an (also prior art) electronic gas pedal position sensor. Thus, this case presents a clear and simple example of a patent combining prior art elements, which this Court can use to consider the proper nonobviousness standards to apply to such patents without being distracted by arguments about complicated technologies.

The procedural stance in which this case reaches this Court fully supports an examination of the question presented in the petition for writ of certiorari. There can be no doubt that the issue was preserved. Petitioner urged both the District Court and the Federal Circuit to apply the nonobviousness standards articulated in this Court's relevant precedents. Both courts declined to do so. Although neither court's opinion contains a discussion of this rejection of Supreme Court precedent, the lack of discussion is simply an acknowledgement that the Federal Circuit has irrevocably committed itself to that rejection, and has fully developed an alternative test.

The facts in this case that are relevant to the question presented have also been sufficiently developed. The patent claim at issue in this case, and the relevant prior art patents, have been thoroughly explored by both the District Court and the Federal Circuit. There are no ambiguities that would be cleared up by further factual development. The legal issue here is ready to be decided by this Court.

Finally, counsel for both parties in this case are knowledgeable and experienced. James W. Dabney of Fried Frank Harris Shriver & Jacobson LLP, counsel of record for petitioner, is a seasoned patent litigator whose previous experience includes serving as the successful counsel of record for petitioner in *Holmes Group, Inc. v. Vornado Air Circulations Sys., Inc.*, 535 U.S. 826 (2002). John F. Duffy, of counsel for petitioner, is a law professor and former Supreme Court clerk who has co-authored a leading casebook on patent law, *see* Robert Patrick Merges & John Fitzgerald Duffy, *Patent Law and Policy: Cases and Materials* (3d ed. 2002), and who has written broadly on patent law issues, *see, e.g.*, John F. Duffy, *Rethinking the Prospect Theory of Patents*, 71 U. Chi. L. Rev. 439 (2004); John F. Duffy, *Harmony and Diversity in Global Patent Law*, 17 Berkeley Tech. L. J. 685 (2002); John F. Duffy, *The Festo Decision and the Return of the Supreme Court to the Bar of Patents*, 2002 Sup. Ct. Rev. 273; John F. Duffy, *On Improving the Legal Process of Claim Construction: Administrative Alternatives*, 2 Wash U. J. L. & Pol'y 109 (2000).

Counsel for respondents, successful appellants below, are also experienced litigators who have previous experience in appellate patent litigation in cases such as *Teleflex, Inc. v. Ficosa North America Corp.*, 299 F.3d 1313 (Fed. Cir. 2002), and additional appellate litigation experience in cases such as *Miltimore Sales, Inc. v. International Rectifier, Inc.*, 119 Fed. Appx. 697 (6th Cir. 2004). Both parties would be well represented in this Court.

In sum, the question presented in this case raises an important and timely issue of federal patent law. This case is the perfect vehicle for considering it.

CONCLUSION

For the foregoing reasons, the petition for writ of certiorari should be granted.

Respectfully submitted,

KATHERINE J. STRANDBURG
Assistant Professor of Law
DEPAUL UNIVERSITY
COLLEGE OF LAW
25 East Jackson Boulevard
Chicago, IL 60604
(312) 362-8536

ROBERT BRAUNEIS*
Associate Professor of Law
THE GEORGE WASHINGTON
UNIVERSITY LAW SCHOOL
2000 H Street, NW
Washington, DC 20052
(202) 994-6138

**Counsel of Record for Amici Curiae*

MARGO BAGLEY
Associate Professor of Law
EMORY UNIVERSITY
SCHOOL OF LAW
1301 Clifton Road
Atlanta, GA 30322

ROCHELLE COOPER DREYFUSS
Pauline Newman Professor of Law
NEW YORK UNIVERSITY
SCHOOL OF LAW
40 Washington Square South
New York, NY 10012

JAMES BESSEN
Lecturer in Law
BOSTON UNIVERSITY
SCHOOL OF LAW
765 Commonwealth Avenue
Boston, MA 02215

CHRISTINE HAIGHT FARLEY
Associate Professor of Law
AMERICAN UNIVERSITY
WASHINGTON COLLEGE OF LAW
4801 Massachusetts Avenue, NW
Washington, DC 20016

MICHAEL A. CARRIER
Associate Professor of Law
RUTGERS UNIVERSITY
SCHOOL OF LAW - CAMDEN
217 North Fifth Street
Camden, NJ 08102

CYNTHIA M. HO
Associate Professor of Law
and Vickrey Research
Professor
LOYOLA UNIVERSITY
CHICAGO SCHOOL OF LAW
One East Pearson Street
Chicago, IL 60611

TIMOTHY R. HOLBROOK
Assistant Professor of Law
CHICAGO-KENT
COLLEGE OF LAW
565 W. Adams St.
Chicago, IL 60661

PETER JASZI
Professor of Law
AMERICAN UNIVERSITY
WASHINGTON COLLEGE OF
LAW
4801 Massachusetts Avenue,
NW
Washington, DC 20016

JAY P. KESAN
Professor of Law
UNIVERSITY OF ILLINOIS
COLLEGE OF LAW
504 East Pennsylvania
Avenue
Champaign, IL 61820

MARK A. LEMLEY
William H. Neukom
Professor of Law
STANFORD LAW SCHOOL
Crown Quadrangle
Stanford, CA 94305

GLYNN S. LUNNEY, JR.
Professor of Law
TULANE UNIVERSITY
SCHOOL OF LAW
Weinmann Hall
6329 Freret Street
New Orleans, LA 70118-6231

RONALD J. MANN
Ben H. & Kitty King Powell
Chair in Business &
Commercial Law
UNIVERSITY OF TEXAS
SCHOOL OF LAW
727 E. Dean Keeton Street
Austin, TX 78705

ROBERT P. MERGES
Wilson Sonsini Goodrich &
Rosati Professor of Law
and Technology
BOALT HALL SCHOOL OF LAW
UNIVERSITY OF CALIFORNIA,
BERKELEY
Berkeley, CA 94720

KIMBERLY A. MOORE
Professor of Law
GEORGE MASON UNIVERSITY
SCHOOL OF LAW
3301 Fairfax Drive
Arlington, VA 22201

JANICE M. MUELLER
Professor of Law
UNIVERSITY OF PITTSBURGH
SCHOOL OF LAW
3900 Forbes Avenue
Pittsburgh, PA 15260

JOSEPH SCOTT MILLER
Associate Professor of Law
LEWIS & CLARK LAW SCHOOL
10015 S.W. Terwilliger Blvd.
Portland, Oregon 97219

CRAIG A. NARD
Professor of Law
CASE WESTERN RESERVE
UNIVERSITY SCHOOL OF LAW
11075 East Blvd.
Cleveland, OH 44106

MALLA POLLACK
Visiting Professor
UNIVERSITY OF IDAHO
COLLEGE OF LAW
6th & Rayburn
Moscow, ID 83843

ARTI K. RAI
Professor of Law
DUKE LAW SCHOOL
Science Drive and
Towerview Road
Durham, NC 27708

PAMELA SAMUELSON
Chancellor's Professor of Law
BOALT HALL SCHOOL OF LAW
UNIVERSITY OF CALIFORNIA,
BERKELEY
Berkeley, CA 94720

JOSHUA SARNOFF
Practitioner-in-Residence
AMERICAN UNIVERSITY
WASHINGTON COLLEGE OF
LAW
4801 Massachusetts Avenue,
NW
Washington, DC 20016

JOHN R. THOMAS
Professor of Law
GEORGETOWN UNIVERSITY
LAW CENTER
600 New Jersey Avenue, NW
Washington, DC 20001

Supreme Court, U.S.
FILED
AUG 2 2 2006
OFFICE OF THE CLERK

No. 04-1350

IN THE

Supreme Court of the United States

KSR INTERNATIONAL CO.,

Petitioner,

—against—

TELEFLEX INC. and
TECHNOLOGY HOLDING CO.,

Respondents.

ON WRIT OF CERTIORARI TO THE UNITED STATES COURT OF APPEALS FOR THE FEDERAL CIRCUIT

JOINT APPENDIX

RODGER D. YOUNG*
YOUNG & SUSSER, P.C.
26200 American Drive
Suite 305
Southfield, Michigan 48034
(248) 353-8620

Attorneys for Respondents

JAMES W. DABNEY*
FRIED FRANK HARRIS
SHRIVER & JACOBSON LLP
1 New York Plaza
New York, New York 10004
(212) 859-8000

Attorneys for Petitioner

* *Counsel of Record*

PETITION FOR CERTIORARI FILED APRIL 6, 2005
CERTIORARI GRANTED JUNE 26, 2006

TABLE OF CONTENTS

Page

Appendix A — Relevant Docket Entries Of The United States Court Of Appeals For The Federal Circuit 1a

Appendix B — Relevant Docket Entries Of The United States District Court For The Eastern District Of Michigan, Detroit 2a

Appendix C — Complaint Dated And Filed November 18, 2002 ..... 19a

Appendix D — Answer And Affirmative Defenses Dated December 11, 2002 ..... 26a

Appendix E — Brief In Support Of Defendant's Motion For Summary Judgment Dated And Filed July 7 2003 ..... 34a

Appendix F — Declaration Of Larry Willemsen Dated And Filed July 7, 2003 ..... 84a

Appendix G — Declaration Of Daniel H. Kruger Dated July 5, 2003 And Filed July 7, 2003 ..... 101a

Appendix H — Declaration Of James W. Dabney Dated July 6, 2003 And Filed July 7, 2003 ..... 116a

Appendix I — Teleflex' S Response To KSR's Motion For Summary Judgment Of Invalidity Dated August, 2003 ..... 121a

Contents

Page

Appendix J — Reply Brief In Support Of Defendant's Motion For Summary Judgment Of Invalidity Dated And Filed August 26, 2003 .... 152a

Appendix K — Third Declaration Of James W. Dabney Dated August 25, 2003 And Filed August 26, 2003 ..... 178a

The following decision, opinion and order have been omitted in printing this joint Appendix because they appear in the appendix of the Petition for a Writ of Certiorari on the following pages:

Decision Of The United States Court Of Appeals For The Federal Circuit Decided January 6, 2005 ... 1a

Opinion And Order Of The United States District Court For The Eastern District Of Michigan Filed December 12, 2003 ..... 18a

APPENDIX A — RELEVANT DOCKET ENTRIES OF THE UNITED STATES COURT OF APPEALS FOR THE FEDERAL CIRCUIT

UNITED STATES COURT OF APPEALS FOR THE FEDERAL CIRCUIT

2004-1152

TELEFLEX INC V. KSR INTERNATIONAL

[No Relevant Docket Entries]

APPENDIX B — RELEVANT DOCKET ENTRIES OF THE UNITED STATES DISTRICT COURT FOR THE EASTERN DISTRICT OF MICHIGAN, DETROIT

U.S. DISTRICT COURT
Eastern District of Michigan (Detroit)
CIVIL DOCKET FOR CASE #: 2:02-cv-74586-LPZ

Teleflex Inc, et al v. KSR Intl Inc
Assigned to: Judge Lawrence P Zatkoff
Demand: $0

Date Filed: 11/18/2002
Jury Demand: Both
Nature of Suit: 190 Contract: Other
Jurisdiction: Federal Question

PLAINTIFF
TELEFLEX, INCORPORATED

represented by

David J. Poirier
Young & Susser (Southfield)
26200 American Drive, Suite 305
Southfield, MI 48034
248-353-8620
Email: efiling@youngpc.com
LEAD ATTORNEY ATTORNEY TO BE NOTICED

Appendix B

Rodger D. Young
Young & Susser
26200 American Drive, Suite 305
Southfield, MI 48034
248-353-8620
Email: efiling@youngpc.com
LEAD ATTORNEY ATTORNEY TO BE NOTICED

Steven C. Susser
Young & Susser (Southfield)
26200 American Drive, Suite 305
Southfield, MI 48034
248-353-8620
Email: efiling@youngpc.com
LEAD ATTORNEY ATTORNEY TO BE NOTICED

Kevin B. Hirsch
Young & Susser (Southfield)
26200 American Drive, Suite 305
Southfield, MI 48034
248-353-8620
Email: efiling@youngpc.com
ATTORNEY TO BE NOTICED

PLAINTIFF
TECHNOLOGY HOLDING COMPANY

V.

Appendix B

INTERVENOR PLAINTIFF
TECHNOLOGY HOLDING COMPANY

represented by

Rodger D. Young
(See above for address)
LEAD ATTORNEY ATTORNEY TO BE NOTICED

Steven C. Susser
(See above for address)
LEAD ATTORNEY ATTORNEY TO BE NOTICED

INTERVENOR PLAINTIFF
TELEFLEX, INCORPORATED

represented by

Rodger D. Young
(See above for address)
LEAD ATTORNEY ATTORNEY TO BE NOTICED

Steven C. Susser
(See above for address)
LEAD ATTORNEY ATTORNEY TO BE NOTICED

Kevin B. Hirsch
(See above for address)
ATTORNEY TO BE NOTICED

V.

Appendix B

DEFENDANT
KSR INTERNATIONAL, INCORPORATED

represented by

James W. Dabney
Pennie & Edmonds
1155 Avenue of the Americas
New York, NY 10036
212-790-9090
Fax: 212-790-6302
LEAD ATTORNEY ATTORNEY TO BE NOTICED

Kenneth J. McIntyre
Dickinson Wright (Detroit)
500 Woodward Avenue, Suite 4000
Detroit, MI 48226-3425
313-223-3500
Fax: 313-223-3598
Email: kmcintyre@dickinsonwright.com
LEAD ATTORNEY ATTORNEY TO BE NOTICED

L. Pahl Zinn
Dickinson Wright
500 Woodward Avenue
Suite 4000 Detroit, MI 48226-3425
313-223-3500
Email: pzinn@dickinsonwright.com
LEAD ATTORNEY ATTORNEY TO BE NOTICED

Appendix B

Robert M. Kalec
Dean & Fulkerson (Troy)
801 W. Big Beaver Road Fifth Floor
Troy, MI
48084-4767
248-262-1300
Email: rkalec@dflaw.com
TERMINATED: 04/14/2003
LEAD ATTORNEY ATTORNEY TO BE NOTICED

V.

MOVANT
TECHNOLOGY HOLDING COMPANY

represented by

Rodger D. Young (See above for address)
LEAD ATTORNEY ATTORNEY TO BE NOTICE

Steven C. Susser (See above for address)
LEAD ATTORNEY ATTORNEY TO BE NOTICED

Appendix B

Date Filed	Docket Text
	* * *
12/04/2002	ORDER reassigning case from Judge John Feikens to Judge Lawrence P. Zatkoff - Reason: companion case to 01-74775 (ew) (Entered: 12/05/2002)
	* * *
12/11/2002	AFFIRMATIVE defenses by defendant KSR Intl Inc (ew) (Entered: 12/12/2002)
01/02/2003	STIPULATED PROTECTIVE order by Judge Lawrence P. Zatkoff [EOD Date: 1/3/03] (DT) Modified on 01/03/2003 (Entered: 01/03/2003)
	* * *
02/06/2003	PRETRIAL scheduling order by Judge Lawrence P. Zatkoff - setting deadline for witness list for 5/30/03 , setting deadline for discovery for 6/13/03 , setting deadline for filing dispositive motions for 7/7/03 , setting final pretrial/settlement conference for 2:00 11/19/03 , setting trailing trial docket for December 2003 with proof of service (kb) (Entered: 02/07/2003)

Appendix B

04/02/2003	MOTION by defendant to dismiss for lack of jurisdiction with brief, exhibits 1-5, and proof of service. (PP) (Entered: 04/02/2003)
04/02/2003	MOTION by plaintiff Teleflex Inc for protective order with brief, exhibits A-H, notice of hearing and proof of service. (RH) (Entered: 04/07/2003)
04/07/2003	ORDER by Judge Lawrence P. Zatkoff, referring motion for protective order by Teleflex Inc [9-1] to Magistrate Judge Steven D. Pepe , for hearing and determination , with proof of service. [EOD Date 4/8/03] (RH) (Entered: 04/08/2003)
04/09/2003	ORDER by Magistrate Judge Steven D. Pepe, setting hearing on motion for protective order by Teleflex Inc [9-1] for 5/28/03 , setting deadline for statement of issues in motion for protective order by Teleflex Inc [9-1] for 5/14/03 with proof of service [EOD Date 4/15/03] (lh) (Entered: 04/15/2003)
04/14/2003	ORDER by Judge Lawrence P. Zatkoff with stipulation, withdrawing by Robert M. Kalec as attorney for KSR Intl Inc , substitution for defendant KSR Intl Inc of attorney Kenneth J. McIntyre in place of attorney Robert M. Kalec [EOD Date: 4/15/03] (lh) (Entered: 04/15/2003)

Appendix B

04/14/2003 ORDER by Judge Lawrence P. Zatkoff allowing plaintiff to file exhibits "G" and "H" under seal [EOD Date 4/15/03] (lh) Modified on 04/15/2003 (Entered: 04/15/2003)

04/14/2003 MOTION by plaintiff Teleflex Inc to compel KSR to produce and disclose responses to the following interrogatories and requests with brief, exhibits "A" thru "F" and "I" thru "N", and notice of hearing (lh) (Entered: 04/15/2003)

* * *

04/21/2003 AMENDED ORDER by Magistrate Judge Steven D. Pepe, setting deadline for statement of issues in motion to compel KSR produce and disclose responses to the following interrogatories and requests by Teleflex Inc [14-1], motion for protective order by Teleflex Inc [9-1] for 5/14/03 , setting hearing on motion to compel KSR to produce and disclose responses to the following interrogatories and requests by Teleflex Inc [14-1] for 5/28/03, motion for protective order by Teleflex Inc [9-1] for 5/23/03, directing compliance with Local Rule 37.1 [EOD Date 4/24/03] (ew) (Entered: 04/24/2003)

* * *

Appendix B

04/24/2003	ORDER by Judge Lawrence P. Zatkoff, allowing plaintiff to file exhibits under seal [23-1] [EOD Date 4/25/03] (ew) (Entered: 04/25/2003)

* * *

04/25/2003	MOTION by defendant KSR Intl Inc for protective order , stay of proceedings pending determination of dispositive motions with brief, exhibits 1-8, notice of hearing, proof of service (dh) (Entered: 04/28/2003)
05/02/2003	ORDER by Magistrate Judge Steven D. Pepe withdrawing motion for protective order by Teleflex Inc [9-1] with attachments [EOD Date 5/8/03] (kb) Modified on 05/08/2003 (Entered: 05/08/2003)

* * *

05/09/2003	RESPONSE by plaintiff to motion for protective order by KSR Intl Inc [26-1], motion stay of proceedings pending determination of dispositive motions by KSR Intl Inc [26-2] with proof of service. (PP) (Entered: 05/12/2003)
05/19/2003	REPLY by defendant KSR Intl Inc to defendant's response to motion for protective order by KSR Intl Inc [26-1] with exhibits 1-4 and proof of service. (RH) (Entered: 05/20/2003)

* * *

Appendix B

06/09/2003	AMENDED STATEMENT by Teleflex Inc of resolved and unresolved issues as to motion to compel KSR to produce and disclose responses to the following interrogatories and requests by Teleflex Inc [14-1] with proof of service [EOD Date: 6/12/03] (kb) (Entered: 06/12/2003)
06/16/2003	ORDER by Magistrate Judge Steven D. Pepe withdrawing motion to compel KSR to produce and disclose responses to the following interrogatories and requests by Teleflex Inc [14-1] [EOD Date 6/18/03], with attachment. (PP) (Entered: 06/18/2003)

* * *

07/07/2003	MOTION by plaintiff Teleflex Inc for summary judgment of infringement of Engelgau Patent with brief, attachments "A" and "1" and exhibits "A" thru "K" (lh) Modified on 07/08/2003 (Entered: 07/08/2003)
07/07/2003	MOTION by plaintiff Teleflex Inc for summary judgment of infringement Johansson Patents with brief, attachments "B" and "1" and exhibits "A" thru "G" (lh) (Entered: 07/08/2003)

* * *

Appendix B

07/07/2003 MOTION by defendant KSR Intl Inc for summary judgment of invalidity with brief, exhibits "1" thru "13" and notice of hearing (lh) Modified on 07/08/2003 (Entered: 07/08/2003)

* * *

07/07/2003 ORDER by Judge Lawrence P. Zatkoff with stipulation, granting additional pages for parties' dispositive motion and brief [EOD Date: 7/8/03] (lh) (Entered: 07/08/2003)

* * *

07/28/2003 BRIEF in opposition by defendant to motion for summary judgment of infringement Johansson Patents by Teleflex Inc [38-1], motion for summary judgment of infringement of Engelgau Patent by Teleflex Inc [37-1] with exhibits 1-6, and proof of service. (PP) (Entered: 07/29/2003)

* * *

07/30/2003 SECOND declaration of Daniel H. Kruger (LS) (Entered: 07/31/2003)

* * *

08/07/2003 OPINION and order by Judge Lawrence P. Zatkoff denying motion to dismiss for lack of

jurisdiction by KSR Intl Inc [8-1] and the parties are to show cause in writing no later than 8/20/03 [EOD Date: 8/8/03] (RH) (Entered: 08/08/2003)

08/11/2003 ORDER by Judge Lawrence P. Zatkoff with stipulation, for dismissal with prejudice of claims II and III of Teleflex's second amended complaint [EOD Date: 8/12/03] (ew) (Entered: 08/12/2003)

* * *

08/11/2003 RESPONSE by plaintiff Teleflex Inc to motion for summary judgment of invalidity by KSR Intl Inc [41-1] with exhibits (ew) (Entered: 08/14/2003)

08/11/2003 REPLY brief in support of 37 Motion for Summary Judgment of infringement of Engelgau Pantent filed by Teleflex, Incorporated. (JPur,) (Entered: 02/12/2004)

08/21/2003 ORDER by Judge Lawrence P. Zatkoff with stipulation, setting deadline for KSR to file reply brief in support of their motion for summary judgment of invalidity [41-1] by 8/29/03 [EOD Date: 8/22/03] (lh) (Entered: 08/22/2003)

* * *

Appendix B

09/19/2003 EXPARTE motion by plaintiff Teleflex Inc for oral argument with brief (lh) (Entered: 09/22/2003)

09/25/2003 MOTION by movant Tech Holding Co to intervene with exhibit "A" (intervenor complaint) and proof of service (lh) (Entered: 09/26/2003)

09/26/2003 ORDER by Judge Lawrence P. Zatkoff with stipulation, adding Technology Holding Company as party plaintiff [EOD Date: 9/29/03] (dh) (Entered: 09/29/2003)

* * *

10/01/2003 INTERVENOR'S complaint by Tech Holding Co, Teleflex Inc against defendant KSR Intl Inc with proof of service (dh) Modified on 10/02/2003 (Entered: 10/02/2003)

10/08/2003 BRIEF in opposition by defendant to motion for oral argument by Teleflex Inc [63-1] with attachments 1-4, and proof of service. (PP) (Entered: 10/09/2003)

10/16/2003 REPLY by plaintiff Teleflex Inc to response to motion for oral argument by Teleflex Inc [63-1] with proof of service. (RH) (Entered: 10/17/2003)

* * *

Appendix B

10/23/2003 ANSWER by defendant to intervenor complaint [71-1] with proof of service (ew) (Entered: 10/24/2003)

* * *

10/29/2003 MOTION by plaintiff Teleflex Inc to compel discovery with brief, exhibits A-F, proof of service and notice of hearing (lh) (Entered: 10/30/2003)

11/05/2003 EXPEDITED HEARING AND ORDER by Judge Lawrence P. Zatkoff, referring motion to compel discovery by Teleflex Inc [76-1] to Magistrate Steven D. Pepe , for hearing and determination with proof of service [EOD Date 11/6/03] (dh) (Entered: 11/06/2003)

11/07/2003 ORDER by Magistrate Judge Steven D. Pepe, setting hearing on motion to compel discovery by Teleflex Inc [76-1] for 11/19/03, setting deadline for statement of issues in motion to compel discovery by Teleflex Inc [76-1] for 11/18/03 [EOD Date 11/10/03] (PP) (Entered: 11/10/2003)

11/17/2003 RESPONSE by defendant KSR Intl Inc to motion to compel discovery by Teleflex Inc [76-1] with exhibits 1-9 and proof of service. (RH) (Entered: 11/18/2003)

* * *

Appendix B

11/18/2003 STATEMENT by plaintiff Teleflex Inc of resolved and unresolved issues as to motion to compel discovery by Teleflex Inc [76-1] [EOD Date: 11/19/03], with proof of service. (RH) (Entered: 11/19/2003)

* * *

11/25/2003 NOTICE by KSR Intl Inc pursuant to 35 USC 282 (ew) (Entered: 11/26/2003)

12/12/2003 OPINION and order by Judge Lawrence P. Zatkoff denying motion for oral argument by Teleflex Inc [63-1], granting motion for summary judgment of invalidity by KSR Intl Inc [41-1] and denying motion for summary judgment of infringement Johansson Patents by Teleflex Inc [38-1] and denying motion for summary judgment of infringement of Engelgau Patent by Teleflex Inc [37-1] [EOD Date: 12/23/03] (lh) (Entered: 12/23/2003)

12/12/2003 JUDGMENT entered by Judge Lawrence P. Zatkoff that plaintiffs' complaint is dismissed with prejudice [EOD Date: 12/23/03] and with proof of service (lh) (Entered: 12/23/2003)

* * *

01/12/2004 NOTICE of docketing from the U.S. Court of Appeals for the Federal Circuit (DHame,) (Entered: 01/31/2004)

Appendix B

01/11/2005	(Not Certified) ORDER from FC re [84] Notice of Appeal filed by Teleflex, Incorporated and Technology Holding Company, vacate and remand. [Appeal Case Number 04-1152] (LBeh,) (Entered: 01/11/2005)
02/01/2005	(Certified) ORDER from FC re [84] Notice of Appeal filed by Teleflex, Incorporated, and Technology Holding Company, vacate and remand. [Appeal Case Number 04-1152] (LBeh,) (Entered: 02/01/2005)
02/01/2005	APPEAL JUDGMENT from USCA as to [84] Notice of Appeal filed by Teleflex, Incorporated and Technology Holding Company, vacated and remanded. [Appeal Case Number 04-1152] (LBeh,) (Entered: 02/01/2005)
03/03/2005	NOTICE TO APPEAR: Status Conference set for 3/31/2005 10:30 AM before Honorable Lawrence P Zatkoff. (MVer,) (Entered: 03/03/2005)
03/21/2005	NOTICE of Change of Location for 93 Notice of Status Conference (JGilb,) (Entered: 03/22/2005)

* * *

Appendix B

10/03/2005	NOTICE of Change of Attorney Information by Teleflex, Incorporated, Teleflex, Incorporated. (Hirsch, Kevin) (Entered: 10/03/2005)
10/03/2005	NOTICE of Change of Attorney Information by Teleflex, Incorporated, Teleflex, Incorporated. (Susser, Steven) (Entered: 10/03/2005)

APPENDIX C — COMPLAINT DATED AND FILED NOVEMBER 18, 2002

UNITED STATES DISTRICT COURT
EASTERN DISTRICT OF MICHIGAN
SOUTHERN DIVISION

TELEFLEX INCORPORATED,

Plaintiff,

v.

KSR INTERNATIONAL CO.,

Defendant.

RODGER D. YOUNG (P22652)
STEVEN SUSSER (P52940)
DAVID J. POIRIER (P62928)
Young & Susser, P.C.
Attorneys for Plaintiff
26200 American Drive, Suite 305
Southfield, MI 48034
248.353.8620

COMPLAINT FOR PATENT INFRINGEMENT

Plaintiff Teleflex Incorporated ("Teleflex"), by its attorneys, Young & Susser, P.C., and for its Amended Complaint against Defendant KSR International Co. ("KSR"), alleges as follows:

Appendix C

PARTIES

1. Teleflex is a Delaware corporation, having its principal place of business at 630 W. Germantown Pike, Plymouth Meeting, Pennsylvania 19462.

2. Upon information and belief, KSR is a Canadian corporation, having its principal place of business in Ridgetown, Ontario, and an office in this district located at 20300 Civic Center Drive, #330, Southfield, Michigan.

JURISDICTION

3. This is an action for patent infringement under Title 35, United States Code, §§ 271 et seq.

4. This Court has jurisdiction under 28 U.S.C. § 1338.

5. Venue is proper pursuant to 28 U.S.C. §§ 1391 and 1400(b).

COUNT I
INFRINGEMENT OF '565 PATENT

6. Teleflex incorporates the allegations of the foregoing Paragraphs 1-5 as though fully set forth herein.

7. On May 29, 2001, United States Patent No. 6,237,565, entitled "Adjustable Pedal Assembly With Electronic Throttle Control" ("the '565 Patent"), was duly and legally issued by the United States Patent and Trademark

Office to Steven J. Engelgau. A copy of the '565 Patent is attached hereto as Exhibit A.

8. Teleflex is the current assignee of all right, title and interest in the '565 Patent, including the right to bring and maintain this action with respect to the '565 Patent.

9. KSR has made, used, offered for sale, and sold in the United States products infringing the '565 Patent and has otherwise committed acts prohibited by 35 U.S.C. § 271.

10. KSR continues to infringe the '565 Patent.

11. KSR's infringement is willful and intentional.

12. As a result of KSR's activities and infringement, Teleflex has suffered and will continue to suffer substantial damages.

13. KSR's infringement of the '565 Patent will continue unless and until enjoined by this Court.

COUNT II
INFRINGEMENT OF '239 PATENT

14. Teleflex incorporates the allegations of the foregoing Paragraphs 1-13 as though fully set forth herein.

15. On October 23, 2001, United States Patent No. 6,305,239 B l, entitled "adjustable pedal assembly" ("the '239 Patent") was duly and legally issued by the United Sates Patent

and Trademark Office to Mattias Johansson and Gunnar Fornell. A copy of the '239 Patent is attached hereto as Exhibit B.

16. Teleflex is the current assignee as to all right, title and interest in the '239 Patent, including the right to bring and maintain this action with respect to the '239 Patent.

17. KSR has made, used, offered for sale, and sold in the United States products infringing the '239 Patent and has otherwise committed acts prohibited by 35 U.S.C. § 271.

18. KSR continues to infringe the '239 Patent.

19. KSR's infringement is willful and intentional.

20. As a result of KSR's activities and infringement, Teleflex has suffered and will continue to suffer substantial damages.

21. KSR's infringement of the '239 Patent will continue unless and until enjoined by this Court.

COUNT III
INFRINGEMENT OF '695 PATENT

22. Teleflex incorporates the allegations of the foregoing Paragraphs 1-21 as though fully set forth herein.

23. On April 23, 2002, United States Patent No. 6, 374,695, entitled "adjustable pedal assembly" ("the '695 Patent") was duly and legally issued by the United Sates Patent and Trademark Office to Mattias Johansson and Gunnar Fornell. A copy of the '695 Patent is attached hereto as Exhibit C.

24. Teleflex is the current assignee as to all right, title and interest in the '695 Patent, including the right to bring and maintain this action with respect to the '695 Patent.

25. KSR has made, used, offered for sale, and sold in the United States products infringing the '695 Patent and has otherwise committed acts prohibited by 35 U.S.C. § 271.

26. KSR continues to infringe the '695 Patent.

27. KSR's infringement is willful and intentional.

28. As a result of KSR's activities and infringement, Teleflex has suffered and will continue to suffer substantial damages.

29. KSR's infringement of the '695 Patent will continue unless and until enjoined by this Court.

WHEREFORE, Teleflex Incorporated requests that this Court enter Judgment that:

A. Declares that the '565, '239, and '695 Patents are valid and infringed by KSR;

B. declares KSR's infringement of the '565, '239, and '695 Patents has been knowing and willful;

C. awards Teleflex its damages caused by KSR's infringement of the '565, '239, and '695 Patents, trebled pursuant to 35 U.S.C. § 284;

D. finds this to be an exceptional case pursuant to 35 U.S.C. § 285 and awards Teleflex its attorneys' fees and costs incurred in this matter;

E. permanently enjoins KSR and its subsidiaries, agents, officers, and employees, and all others acting in concert with it, from further infringement of the '565, 239, and '695 Patents under penalty of contempt; and,

F. awards to Teleflex such other and further equitable relief as the Court may deem necessary and proper to correct the injury to Teleflex and to the public interest caused by KSR's unlawful conduct.

YOUNG & SUSSER, P.C.

BY:

RODGER D. YOUNG (P22652)
STEVEN SUSSER (P52940)
DAVID J. POIRIER (P62928)
Attorneys for Plaintiff
26200 American Drive, Suite 305
Southfield, MI 48034
248.353.8620

Dated: November 18, 2002

Appendix C

Exhibit	Supplemental Joint Appendix page
A	1
B	9
C	16

APPENDIX D — ANSWER AND AFFIRMATIVE DEFENSES DATED DECEMBER 11, 2002

UNITED STATES DISTRICT COURT
EASTERN DISTRICT OF MICHIGAN
SOUTHERN DIVISION

CASE NO: 02-74586

TELEFLEX INCORPORATED,

Plaintiff,

vs.

KSR INTERNATIONAL CO.,

Defendant.

RODGER D. YOUNG (P22652)
STEVEN SUSSER (P52940)
DAVID J. POIRIER (P62928)
YOUNG & SUSSER, P.C.
26200 American Drive
Suite 305
Southfield, MI 48034
(248) 353-8620
Attorneys for Plaintiff

Appendix D

ROBERT M. KALEC (P38677)
DEAN & FULKERSON, P.C.
801 W. Big Beaver Road, 5th Floor
Troy, MI 48084
(248) 362-1300
Attorney for Defendant

KSR INTERNATIONAL CO.'S ANSWER AND AFFIRMATIVE DEFENSES TO COMPLAINT FOR PATENT INFRINGEMENT AND RELIANCE ON JURY DEMAND

Defendant, KSR International Co. ("KSR"), by and through its attorneys, Dean & Fulkerson, P.C., responds and answers the Complaint for Patent Infringement as follows:

PARTIES

1. Defendant lacks information sufficient to form a belief as to the truth of the allegations contained in paragraph 1, and therefore they are denied.

2. The allegations in paragraph 2 are admitted.

JURISDICTION

3. The allegations contained in paragraph 3 are conclusions of law, not statements of fact to which an answer is required. To the extent an answer is deemed to be required the allegations are denied.

Appendix D

4. The allegations contained in paragraph 4 are conclusions of law, not statements of fact to which an answer is required. To the extent an answer is deemed to be required the allegations are denied.

5. The allegations contained in paragraph 5 are conclusions of law, not statements of fact to which an answer is required. To the extent an answer is deemed to be required the allegations are denied.

COUNT I
INFRINGEMENT OF '565 PATENT

6. Defendant incorporates by reference its answers to paragraphs 1 through 5, as if fully set forth herein.

7. Defendant lacks information sufficient to form a belief as to the truth of the allegations contained in paragraph 7, and therefore they are denied.

8. Defendant lacks information sufficient to form a belief as to the truth of the allegations contained in paragraph 8, and therefore they are denied.

9. The allegations in paragraph 9 are denied.

10. The allegations in paragraph 10 are denied.

11. The allegations in paragraph 11 are denied.

12. The allegations in paragraph 12 are denied.

13. The allegations in paragraph 13 are denied.

COUNT II
INFRINGEMENT OF '239 PATENT

14. Defendant incorporates by reference its answers to paragraphs 1 through 13, as if fully set forth herein.

15. Defendant lacks information sufficient to form a belief as to the truth of the allegations contained in paragraph 15, and therefore they are denied.

16. Defendant lacks information sufficient to form a belief as to the truth of the allegations contained in paragraph 16, and therefore they are denied.

17. The allegations in paragraph 17 are denied.

18. The allegations in paragraph 18 are denied.

19. The allegations in paragraph 19 are denied.

20. The allegations in paragraph 20 are denied.

21. The allegations in paragraph 21 are denied.

COUNT III
INFRINGEMENT OF '695 PATENT

22. Defendant incorporates by reference its answers to paragraphs 1 through 21, as if full set forth herein.

Appendix D

23. Defendant lacks information sufficient to form a belief as to the truth of the allegations contained in paragraph 23, and therefore they are denied.

24. Defendant lacks information sufficient to form a belief as to the truth of the allegations contained in paragraph 24, and therefore they are denied.

25. The allegations in paragraph 25 are denied.

26. The allegations in paragraph 26 are denied.

27. The allegations in paragraph 27 are denied.

28. The allegations in paragraph 28 are denied.

29. The allegations in paragraph 29 are denied.

The prayer for relief, in whole and in all of its sub-parts, is not an allegation of fact to which an answer is required. To the extent an answer is deemed to be required, the demand for relief is denied in whole and in all of its sub-parts.

AFFIRMATIVE DEFENSES

1. U.S. Patent No. 6,237,565 is unenforceable.

2. U.S. Patent No. 6,237,565 is invalid for failure to meet or to comply with one or more requirements of Title 35 of the United States Code.

Appendix D

3. U.S. Patent No. 6,237,565 has not been infringed by any product that Defendant makes, uses, sells or has caused to be made, used or sold.

4. U.S. Patent No. 6,305,239 B1 is unenforceable.

5. U.S. Patent No. 6,305,239 B1 is invalid for failure to meet or to comply with one or more requirements of Title 35 of the United States Code.

6. U.S. Patent No. 6,305,239 B1 has not been infringed by any product that Defendant makes, uses, sells or has caused to be made, used or sold.

7. U.S. Patent No. 6,374,695 is unenforceable.

8. U.S. Patent No. 6,374,695 is invalid for failure to meet or to comply with one or more requirements of Title 35 of the United States Code.

9. U.S. Patent No. 6,374,695 has not been infringed by any product that Defendant makes, uses, sells or has caused to be made, used or sold.

WHEREFORE, Defendant, KSR International Co., requests that the Complaint be dismissed with prejudice, and that it be awarded its costs and attorneys fees and such other relief as the Court deems appropriate.

Appendix D

Respectfully submitted,

DEAN & FULKERSON, P.C.

By: /s/
Robert M. Kalec (P38677)
Attorney for Defendant
801 W. Big Beaver Road, 5th Floor
Troy, MI 48084
(248) 362-1300

Dated: December 11, 2002

Appendix D

RELIANCE ON JURY DEMAND

NOW COMES Defendant, KSR International Co., by and through its attorneys, Dean & Fulkerson, P.C., and hereby relies upon the demand for jury trial previously filed by Plaintiff in the above-entitled cause.

Respectfully submitted,

DEAN & FULKERSON, P.C.

By: /s/
Robert M. Kalec (P38677)
Attorney for Defendant
801 W. Big Beaver Road, 5th Floor
Troy, MI 48084
(248) 362-1300

Dated: December 11, 2002

APPENDIX E — BRIEF IN SUPPORT OF DEFENDANT'S MOTION FOR SUMMARY JUDGMENT DATED AND FILED JULY 7 2003

UNITED STATES DISTRICT COURT
EASTERN DISTRICT OF MICHIGAN
SOUTHERN DIVISION

Case No: 02-74586

TELEFLEX INCORPORATED,

Plaintiff,

vs.

KSR INTERNATIONAL CO.,

Defendant.

KENNETH J. MCINTYRE (P17450)
L. PAHL ZINN (P57516)
Dickson Wright PLLC
Attorneys for Defendant
500 Woodward Avenue, Suite 4000
Detroit, MI 48226-3425
(313) 223-3500

JAMES W. DABNEY
Pennie & Edmonds LLP
Attorneys for Defendant
1155 Avenue of the Americas
New York, NY 10036
(212) 790-9090

Appendix E

RODGER C. YOUNG (P22652)
STEVEN SUSSER (P52940)
DAVID J. POIRIER (P62928)
Young & Susser, P.C.
Attorneys for Plaintiff
26200 American Drive, Suite 305
Southfield, Michigan 48034
(248) 353-8620

BRIEF IN SUPPORT OF DEFENDANT'S MOTION FOR SUMMARY JUDGMENT OF INVALIDITY

[Tables intentionally omitted]

STATEMENT OF ISSUES

Non-party Technology Holding Company ("THC") is the assignee and sole owner of U.S. Patent Nos. 6,237,565B1 (the "'565 Patent"), 6,305,239B1 (the "'239 Patent") and 6,374,695B1 (the "'695 Patent"). In this action commenced November 18, 2002, THC's alleged licensee, plaintiff Teleflex Incorporated ("Teleflex"), has accused defendant KSR International Co. ("KSR") of selling position-adjustable, vehicular control pedals that allegedly embody THC-owned "patented invention[s]," within the meaning of 35 U.S.C § 271(a).

On April 2, 2003, KSR moved for an Order dismissing this action for lack of subject matter jurisdiction, on the grounds that (a) Teleflex is not a "patentee" having standing to sue under 35 U.S.C. § 281, and (b) "any defect in standing creates a defect in subject matter jurisdiction, necessitating dismissal

under Federal Rule of Civil Procedure 12(b)(1)." *Lans* v. *Gateway 2000, Inc.*, 84 F. Supp. 2d 112, 114 n.6 (D.D.C. 1999), *aff'd sub nom. Lans* v. *Digital Equip. Corp.*, 252 F.3d 1320, 1328 (Fed. Cir. 2001) ("if a party lacks title to a patent, that party 'has no standing to bringing an infringement action' under that patent") (citation omitted). KSR's motion to dismiss remains pending.

In *KSR International Co.* v. *Technology Holding Co.*, No. 03-277-KAJ (D. Del., filed Mar. 12, 2003) (the "Delaware Action"), THC has accused KSR of infringing the same three patents as its alleged licensee, Teleflex, has asserted in this action. On April 16, 2003, KSR moved in the Delaware Action for summary judgment of invalidity of each of the THC-owned patents that Teleflex has attempted to assert in this action.

If despite the foregoing, this Court determines to adjudicate the validity of the THC-owned patents that Teleflex has attempted to assert in this action, the following issues are raised by the present motion for summary judgment:

1. Whether the '239 Patent is invalid under 35 U.S.C. § 102.

2. Whether the '695 Patent is invalid under 35 U.S.C. § 102.

3. Whether Claim 4 of the '565 Patent is invalid under 35 U.S.C. § 103.

4. Whether the '239 and '695 Patents are invalid under 35 U.S.C. § 103.

KSR responds: *YES*

FACTS

KSR International Company ("KSR") is a corporation organized and existing under the laws of Nova Scotia, Canada, having its principal place of business in Ridgetown, Ontario, Canada (Declaration of Larry Willemsen, sworn to July 7, 2003 [hereinafter "Willemsen Decl."] ¶ 2). KSR manufactures and supplies pedal systems, throttle controls, latches, handles, and other components installed as original equipment in various makes of vehicles manufactured by General Motors Corporation ("GM"), Ford Motor Company ("Ford"), DaimlerChrysler Corporation ("Daimler"), and other vehicle manufacturers worldwide. A description of KSR's business may be found at the "web site" associated with www.ksrint.com (Willemsen Decl. ¶ 3).

Non-party Technology Holding Company ("THC") is a corporation organized and existing under the laws of Delaware, having its principal place of business in Little Falls Centre II, 2751 Centerville Road, Suite 310, Wilmington, Delaware 19808 (Declaration of James W. Dabney, sworn to July 6, 2003 [hereinafter, "Dabney Decl."] ¶¶ 2-4 & Exs. 1 -

---

1. As described more fully *infra*, the alleged "inventions" disclosed in the '239 Patent and the '695 Patent were originally assigned to Claes Johansson Automotive AB, a Swedish entity (Dabney Decl. ¶¶ 11-12 & Exs. 10-11).

3). At the time this action was commenced on November 18, 2002, THC was the sole owner of the '565 Patent, the '239 Patent, and the '695 Patent (collectively the "THC Patents") by virtue of a series of assignments[1] including a written "Assignment of Patents" dated September 27, 2002, executed by Teleflex Inc. ("Teleflex") and recorded with the United States Patent and Trademark Office (the "September 2002 Assignment"; *see* Dabney Decl. ¶ 2 & Ex. 1).

Teleflex is a Delaware corporation headquartered in Plymouth Meeting, Pennsylvania (Dabney Decl. ¶ 2 & Ex. 1). Teleflex is a direct competitor of KSR in the business of supplying pedal systems to Ford, GM, Daimler, and other vehicle manufacturers.

Adjustable Pedal Assemblies

This case concerns position-adjustable vehicle pedals, commonly known as "gas pedals," that are used to actuate a motor vehicle's fuel system. A position-adjustable pedal is one whose resting position can be moved, or "adjusted," relative to a driver's seating position. Set forth below is an image of an "adjustable" pedal assembly that was installed in a 1975 Pontiac Grand Ville convertible (Willemsen Decl ¶ 7 & Ex. 1; Declaration of Daniel H. Kruger, sworn to July 6, 2003 [hereinafter, "Kruger Decl."] ¶ 21 & Ex. 1):

Appendix E

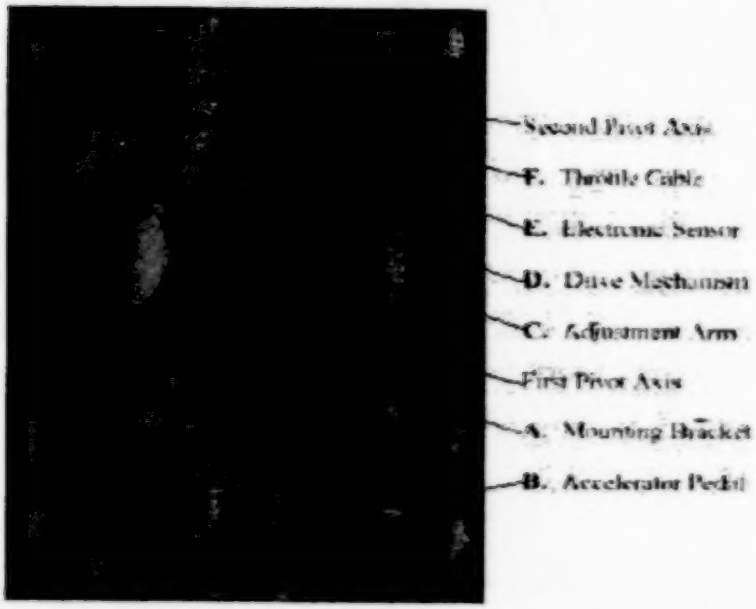

The pedal assembly depicted above includes a mounting bracket ("A") designed for attachment to a vehicle structure. The accelerator pedal ("B") is mounted on an adjustment arm ("C"). A drive mechanism ("D") is operably connected to the adjustment arm ("C"). Actuation of the drive mechanism ("D") causes the adjustment arm ("C") to rotate about its pivot axis, thereby moving the pedal ("B") between a plurality of operable positions (Willemsen Decl. ¶¶ 7, 27-28 & Exs. 1, 3-4)). Computer animations showing the actual movement of structures comprising a 1975 Pontiac Grand Ville adjustable accelerator pedal, and how those structures anticipate the asserted claims of the '239 and '695 Patents, appear in the files named "Pontiac" in the compact disk submitted as Exhibit 1 to this Brief (see Kruger Decl. ¶¶ 16-24 & Ex. 1).[2]

---

2. The mpeg files in Exhibit 1 are best viewed with Windows Media Player or a similar program.

Appendix E

The 1975 Pontiac Grand Ville, like most cars built prior to 2002, came with an engine whose throttle was actuated by a cable. In vehicles equipped with cable-actuated throttle controls, depression of the accelerator pedal typically causes a cable to pull on a valve housed in a carburetor or fuel injection unit, thereby increasing the amount of fuel and air entering the engine and hence engine speed (Willemsen Decl. ¶ 8). Accelerator pedals designed to actuate throttle cables also often actuate electronic sensors, exemplified by the electronic sensor ("E") incorporated in the 1975 Pontiac Grand Ville pedal for controlling an automatic transmission (*id.* ¶ 7 & Ex. 1).

Commencing in the mid-1990's, increasing numbers of vehicles sold in the United States came equipped with engines whose throttles were controlled electronically, by computerized systems commonly known as "electronic throttle controls" ("ETC's"). Electronic throttle controls can accommodate improved traction control and vehicle directional stability systems, simplified cruise controls, and on-board computer-controlled systems for improving fuel economy and reducing tailpipe emissions (Willemsen Decl. ¶ 9). In vehicles whose engines are equipped with electronic throttle controls, accelerator pedals typically are coupled to a type of electronic sensor called a "potentiometer," which works something like a light dimmer (Willemsen Decl. ¶¶ 10 - 19 & Exs. 8-10).

In fact, an adjustable pedal assembly incorporating a potentiometer is disclosed in Figure 4 of published French Patent Application No. 2,739,947 to Urset ("Urset"), reprinted below (Dabney Decl. ¶ 7 & Ex. 6):

Appendix E

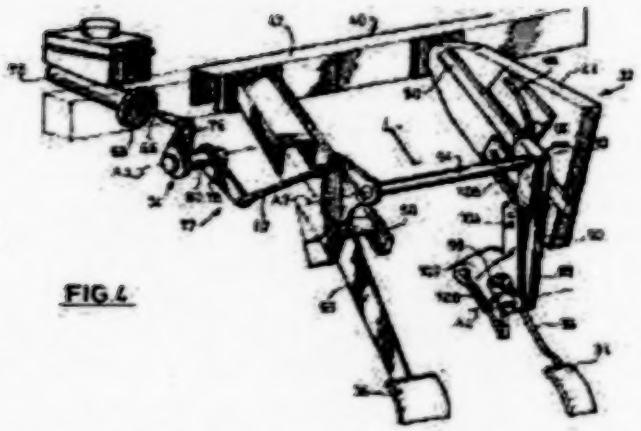

FIG. 4

In the above design, the accelerator pedal (34) acts on an electronic potentiometer (98) that modulates an electronic signal as a function of the angular position of the pedal around its pivoting axis A4 (Dabney Decl. ¶¶ 7-8 & Exs. 6-7; Willemsen Decl. ¶ 29 & Ex. 5). The electronic signal is communicated to a computer processor that, in turn, causes a fuel injection unit or other fuel system to vary the amount of fuel and air entering the engine (Willemsen Decl. ¶ 10). Computer animations showing the actual movement of structures disclosed in Urset, and how those structures anticipate the asserted claims of the '239 and '695 Patents, appear in the files named "Urset" in Exhibit 1 to this Brief (Kruger Decl. ¶¶ 32-39 & Ex. 1).

KSR Adjustable Pedals

In mid-1998, KSR was chosen by Ford to supply adjustable pedal systems for the Ford Crown Victoria, Mercury Grand Marquis, and Lincoln Town Car lines commencing with the 2001 model year. The Ford engines installed in these vehicles utilized cable-actuated throttle controls, and the KSR-supplied accelerator pedals

accordingly included cable-attachment arms. Neither Teleflex nor THC has ever alleged that any pedal systems supplied to Ford for the 2001, 2002, or 2003 model Crown Victoria, Grand Marquis, or Town Car programs incorporate or use any patented inventions allegedly owned by Teleflex or THC. KSR was awarded U.S. Patent No. 6,151,986 for the design of the adjustable pedal systems supplied to Ford commencing with the 2001 model year (Willemsen Decl. ¶ 24).

In mid-2000, KSR was chosen by GM to supply adjustable pedal systems for the Chevrolet and GMC light pick-up truck lines commencing with the 2003 model year. The GM engines installed in these vehicles utilized electronic throttle controls, and the KSR-supplied accelerator pedals accordingly included off-the-shelf electronic pedal position sensors — the identical sensors, in fact, as had been utilized in 1994 and later models of Chevrolet and GMC pick-up trucks equipped with optional diesel engines. KSR has patents pending on the design of the adjustable pedal system supplied to GM commencing with the 2003 model year (Willemsen Decl. ¶¶ 14-18, 25).

By letter dated March 28, 2001 — long prior to when Teleflex could have legitimately or legally seen the design of any KSR adjustable pedals that were then being developed for the 2003 model Chevrolet and GMC light pick-up truck lines — Teleflex sent a letter to KSR which stated in part (Willemsen Decl ¶ 26 & Ex. 2):

> We understand that you have made several proposals to General Motors Corporation based on an adjustable pedal product in combination

> with an electronic throttle control. . . . Teleflex believes that any supplier of a product that combines an adjustable pedal with an electronic throttle control necessarily employs technology covered by one or more of the above Teleflex patents and applications.

That is to say, Teleflex took — and apparently still takes — the position that it had somehow patented the "combination" of "an adjustable pedal with an electronic throttle control," and so could accuse KSR of patent infringement without even seeing how any KSR-manufactured pedal assemblies were designed or operated.

Course of Proceedings

After attempting and failing to persuade KSR to enter into a "business arrangement" involving "some type of royalty arrangement coupled with the supply by us [Teleflex] to you [KSR] of electronic throttle controls or other components of an adjustable pedal system" (Willemsen Decl. ¶ 26 & Ex. 2), Teleflex on December 17, 2001, commenced an action in this Court entitled *Teleflex Inc.* v. *KSR International Co.*, Case No. 01-74775 (the "First Teleflex Action"). The Complaint in the First Teleflex Action alleged that Teleflex was "the current assignee of all right, title and interest in the '565 Patent, including the right to bring and maintain this action with respect to the '565 Patent."[3] The

---

3. Teleflex's Amended Complaint for Patent Infringement filed in the First Teleflex Action dated February 13, 2002, at ¶ 8.

Appendix E

Complaint in the First Teleflex Action included no allegations relating to the '239 Patent or the '695 Patent.

On November 13, 2002, Teleflex voluntarily dismissed, without prejudice, its Complaint in the First Teleflex Action. Five days later, on November 18, 2002, Teleflex filed a new complaint commencing the present action, Case No. 02-74586 (the "Second Teleflex Action"). Teleflex's Complaint in this Second Teleflex Action alleged in part:

> 8. Teleflex is the current assignee as to all right, title and interest in the '565 Patent, including the right to bring and maintain this action with respect to the '565 Patent.
>
> 16. Teleflex is the current assignee as to all right, title and interest in the '239 Patent, including the right to bring and maintain this action with respect to the '239 Patent.
>
> 24. Teleflex is the current assignee as to all right, title and interest in the '695 Patent, including the right to bring and maintain this action with respect to the '695 Patent.

In fact, as KSR subsequently discovered, Teleflex as of November 18, 2002, was not the "assignee" or owner of any of the patents being asserted. Subsequent to the commencement of the First Teleflex Action, and prior to the commencement of the Second Teleflex Action, Teleflex on September 27, 2002, formally assigned to non-party THC "all of its [Teleflex's] right, title and interest in and to the

Inventions" covered by any "patent used exclusively or primarily in the conduct of Assignor's [Teleflex's] automotive, marine, aerospace/defense divisions businesses" (Dabney Decl. ¶ 2 & Ex. 1), including specifically "all claims by reason of infringement of the Patents and the right to sue and collect damages for such infringement" (*id.*). As KSR has previously demonstrated,[4] Teleflex's assignment of patents and patent claims to THC on September 27, 2002, destroyed any basis Teleflex might have had for claiming to be a "patentee" for purposes of 35 U.S.C. § 281, thus "necessitating dismissal under Federal Rule of Civil Procedure 12(b)(1)." *Lans* v. *Gateway 2000, Inc.*, 84 F. Supp. 2d 112, 114 n.6 (D.D.C. 1999), *aff'd sub nom. Lans* v. *Digital Equip. Corp.*, 252 F.3d 1320, 1321 (Fed. Cir. 2001) ("if a party lacks title to a patent, that party 'has no standing to bring an infringement action' under that patent") (citation omitted).

Promptly upon learning of Teleflex's non-ownership of the patents being asserted in this action, KSR commenced the Delaware Action against the patents' actual owner, non-party THC, and moved for an Order dismissing the present action for lack of subject matter jurisdiction.[5] On April 2, 2003, non-party THC served an answer in the Delaware Action that accused KSR of infringing the same three patents

---

4. *See* Reply Brief in Support of Motion to Dismiss for Lack of Subject Matter Jurisdiction filed May 6, 2003.

5. See Brief in Support of Defendant's Motion to Dismiss for Lack of Subject Matter Jurisdiction filed April 2, 2003; Teleflex's Response to KSR's Motion to Dismiss for Lack of Subject Matter Jurisdiction filed April 22, 2003; Reply Brief in Support of Motion to Dismiss for Lack of Subject Matter Jurisdiction filed May 6, 2003.

(the "THC Patents") that Teleflex had attempted to assert in this Michigan action (Dabney Decl. ¶ 4 & Ex. 3). On April 16, 2003, KSR moved in the Delaware Action for summary judgment declaring the THC Patents invalid under 35 U.S.C. § 103 (*id.* ¶ 5 & Ex. 4). KSR's summary judgment motion in the Delaware Action remains pending and undecided.[6]

In the event that this Court determines to adjudicate the merits of the THC-owned patents and THC-owned claims for infringement that Teleflex has alleged in this action, KSR hereby moves for summary judgment declaring invalid each of the THC Patents under 35 U.S.C. §§ 102 and 103.

SUMMARY OF THE ARGUMENT

The claimed "inventions" of the THC Patents are invalid under 35 U.S.C. §§ 102 and 103, because prior art to the THC Patents expressly teaches both (a) the exact adjustable pedal configurations claimed in the THC Patents, and (b) the desirability of electronic pedal position sensors being deployed, mounted, and coupled to a vehicle's fuel system in the exact manner claimed in the THC Patents.

When it issued the THC Patents, the United States Patent and Trademark Office (the "Patent Office") did not have before it various references — including the 1975 Pontiac, Urset, U.S. Patent No. 5,010,782 to Asano ("Asano"), or U.S. Patent No. 2,860,720 to Huff ("Huff") — that disclosed each and every mechanical structure recited in the claims of the

---

6. On April 28, 2003, the Court hearing the Delaware Action stayed proceedings in that action pending determination of KSR's pending motion to dismiss the within action for lack of subject matter jurisdiction.

THC Patents (Willemsen Decl. ¶¶ 27-41 & Exs. 1, 3-14; Kruger Decl. ¶¶ 2-39 & Ex. 1). Without the impediment of this art, Teleflex's and THC's patent counsel procured issuance of the THC Patents by arguing to the Patent Office — incorrectly — that the prior art supposedly did not disclose the mechanical configurations that the 1975 Pontiac, Urset, Asano, Huff, and other prior art indisputably do, in fact, disclose (Dabney Decl. ¶ 14 & Ex. 13 at 13, ¶ 15 & Ex. 14 at 21; ¶ 16 & Ex. 15 at 10; ¶ 17 & Ex. 16 at 11).[7]

The prior art submitted with this motion establishes, not just clearly and convincingly, but beyond any doubt whatsoever, that at relevant times the claimed "inventions" of the THC Patents were unpatentable under 35 U.S.C. §§ 102 and 103. Summary judgment is therefore warranted and appropriate. *Cf. Ryko Mfg. Co.* v. *Nu-Star, Inc.*, 950 F.2d 714 (Fed. Cir. 1990) (affirming summary judgment of invalidity under 35 U.S.C. § 103, where claimed "invention" consisted of mere substitution of electronic for mechanical activation device in automatic car wash).

ARGUMENT

United States patents contain "a grant to the patentee, his heirs or assigns, of the right to exclude others from making, using, offering for sale, or selling the invention throughout the United States . . . ." 35 U.S.C. § 154(a)(1). The scope of a patent "grant" is measured by the separately

---

7. For purposes of the present motion, the Court may assume that THC's assignor's misdescriptions of the prior art during prosecution of the THC Patents were innocent.

numbered "claims" appearing at the end of a patent. *See Graver Tank & Mfg. Co.* v. *Linde Air Prods. Co.*, 336 U.S. 271, 277 (1949) ("We have frequently held that it is the claim which measures the grant to the patentee."). "While the cases more often have dealt with efforts to resort to specifications to expand claims, it is clear that the latter fail equally to perform their function as a measure of the grant when they overclaim the invention." *Id.*

The validity of a patent grant thus turns on whether its corresponding "claim" recites subject matter that is patentably distinct from the "prior art" that existed at relevant times. Overly broad patent claims cannot be "saved" from invalidity through judicial importation of limitations appearing only in the "specification" portion of a patent. *E.I. Du Pont de Nemours & Co.* v. *Phillips Petroleum Co.*, 849 F.2d 1430, 1433-34 (Fed. Cir.), *cert. denied*, 498 U.S. 986 (1988).

As used in the Patent Act, the term "prior art" refers to subject matter falling within the scope of 35 U.S.C. § 102. For purposes of the present motion, KSR relies on "prior art" meeting the standards of 35 U.S.C. §§ 102 (a) and (b) which provide:

> A person shall be entitled to a patent unless—
>
> (a) the invention was known or used by others in this country, or patented or described in a printed publication in this or a foreign country, before the invention thereof by the applicant for patent, or

> (b) the invention was patented or described in a printed publication in this or a foreign country or in public use or on sale in this country, more than one year prior to the date of the application for patent in the United States, ...

According to interrogatory answers served by Teleflex, the alleged "inventions" of the '239 and '695 Patents were made on May 23, 1997 (Dabney Decl. ¶ 6 & Ex. 5, response to Interrogatory No. 11). Thus, under 35 U.S.C. § 102(a), the "prior art" of the '239 and '695 Patents includes any pertinent patents or printed publications issued prior to May 23, 1997, "in this or a foreign country," such as French Patent Appln. No. 2,739,947 to Urset published April 18, 1997 (Dabney Decl. ¶ 7 & Ex. 6).

The '239 and '695 Patents issued from "continuation" applications that claimed priority to a "parent" application filed November 24, 1997 (Dabney Decl. ¶¶ 14-15 & Exs. 13-14). Thus, under 35 U.S.C. § 102(b), the "prior art" of the '239 and '695 Patents also includes any pertinent products that were in public use or on sale in the United States on or prior to November 24, 1996, such as the adjustable pedals that were offered as an option in the 1975 Pontiac Grand Ville (Willemsen Decl. ¶ 7 & Ex. 1) and the electronic throttle control ("ETC") pedals that came standard in 1994 Chevrolet C/K pick-up trucks equipped with diesel engines (*id.* ¶¶ 14-19 & Exs. 8-10).

According to interrogatory answers served by Teleflex, the alleged "inventions" of the '565 Patent were made on February 14, 1998 (Dabney Decl. ¶ 6 & Ex. 5, response to Interrogatory No. 11). Thus, under 35 U.S.C. § 102(a), the

"prior art" of the '565 Patent includes any pertinent patents or printed publications issued prior to February 14, 1998, such as U.S. Patent No. 5,010,782 to Asano. The '565 Patent issued from a "continuation" application that claimed priority to a "parent" application filed January 26, 1999 (Dabney Decl. ¶ 17 & Ex. 16). Thus, under 35 U.S.C. § 102(b), the "prior art" of the '565 Patent also includes any pertinent products that were in public use or on sale in the United States on or prior to January 26, 1998.

I. THE '239 PATENT IS INVALID UNDER 35 U.S.C. § 102.

"It is well-settled that a claim is anticipated if each and every limitation is found either expressly or inherently in a single prior art reference." *Celeritas Technologies, Ltd.* v. *Rockwell Int'l Corp.*, 150 F.3d 1354, 1361 (Fed. Cir. 1998). As set forth below, Claim 1 of the '239 Patent is fully anticipated by both Urset and the 1975 Pontiac Grand Ville adjustable accelerator pedal.

The '239 Patent (see Exhibit 2 hereto) discloses a single embodiment of an "adjustable pedal assembly" comprising the structures depicted below:

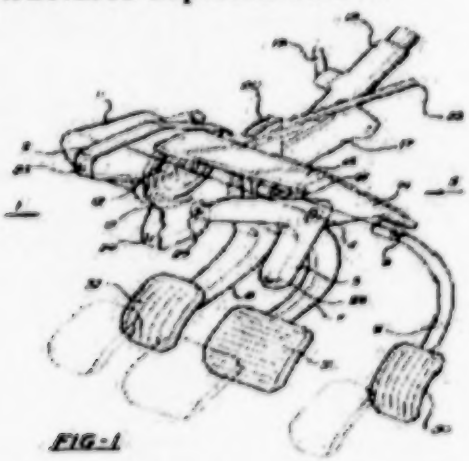

FIG-1

Appendix E

In the above design, an adjustable pedal assembly is disclosed comprising a "mounting arrangement" (2, 3, 23, 24, 25, 26) designed for attachment to a vehicle structure. A pedal (6, 7, or 8) is pivotally supported for rotation about a first pivot axis (9) with respect to the "mounting arrangement." An "adjustment element" (5) is pivotally supported for rotation about a second pivot axis (4) that is parallel to the first. A drive mechanism (11) is operably connected to the "adjustment element" (5) and causes it to rotate about its pivot axis, thereby causing the pedals to move between a plurality of operable positions. With regard to the accelerator pedal (6), the specification recites that it is "preferably connected to an electric control potentiometer," but that "a mechanical connection such as a wire or cable, can be used as an alternative to the electrical transfer" ('239 Patent at col. 5, lines 1, 41-43).[8]

Although the '239 Patent discloses various structures (e.g., the particular configuration of the disclosed, rearward facing "mounting arrangement") that THC's assignor(s) might have pointed out in claim 1 of the '239 Patent in order to distinguish the subject matter of that claim from the prior

---

8. The drawings submitted with the original Swedish "parent" application of the '239 Patent, filed by non-party Claes Johansson Automotive AB, notably did not include the Figure "36" or the associated text referring to "electronic control potentiometer 36" appearing in column 6, lines 1-9 of the '239 Patent (Dabney Decl. ¶ 11 & Ex. 10 at KSR007626). These matters appear to have been hand-written in by Teleflex's and THC's U.S. patent counsel.

art, [9] they did not do so. Rather, in an apparent attempt to exclude KSR from selling KSR-designed (and separately patented) pedal assemblies that are totally different, in design and mode of operation, from any "invention" even arguably disclosed in the '239 Patent, THC's and Teleflex's patent counsel wrote Claim 1 of the '239 so broadly and so generically that it is fully anticipated by prior art to the '239 Patent. [10]

---

9. The '239 Patent was prosecuted as a "continuation" application filed September 5, 2000, based on the disclosure of a "parent" application that was filed nearly two (2) years previously and issued as U.S. Patent No. 6,151,984 (the "'984 Patent"; see Exhibit 3 hereto). The '984 Patent, whose claims are considerably narrower than those of the '239 and '695 Patents, has never been asserted against KSR.

10. It should be noted that, for purposes of determining whether a person is using a "patented invention" for purposes of 35 U.S.C. § 271(a), "the court must consider the substance of the invention along with the form of the claims," and must determine whether an accused product is or "is not the equivalent of the invention disclosed in [a] . . . patent". *Mead Digital Sys., Inc. v. A.B. Dick Co.*, 723 F.2d 455, 463 & n.12 (6th Cir. 1983) (emphasis added). See, e.g., *Sanitary Refrigerator Co. v. Winters*, 280 U.S. 30, 41-42 (1929) (quoting *Burr v. Duryee*, 68 U.S. (1 Wall.) 531, 573 (1864)); *Autogiro Co. of Am. v. United States*, 384 F.2d 391, 399-400 (Ct. Cl. 1967); *Nickerson v. Bearfoot Sole Co.*, 311 F.2d 858, 879-81 (6th Cir. 1962), *cert. denied*, 375 U.S. 815 (1963). No comparable "equivalents" analysis is pertinent to questions of anticipation under 35 U.S.C. § 102. *Lewmar Marine, Inc. v. Barient, Inc.*, 827 F.2d 744, 747-48 (Fed. Cir. 1987), *cert. denied*, 484 U.S. 1007 (1988).

Appendix E

The '239 Patent is invalid under 35 U.S.C. § 102(a), because its sole claim is fully anticipated by Urset (*see* Willemsen Decl. ¶ 30 & Ex. 6; Kruger Decl. ¶ 32 & Ex. 1). A computer animation, comparing the words of Claim 1 of the '239 Patent with 3-dimensional images of the Urset disclosure, appears in the file named "Urset_239_claim_1.mpeg" in the disk submitted as Exhibit 1 to this Brief. A conventional claim chart comparing the language of Claim 1 of the '239 Patent with the Urset disclosure appears in Exhibit 6 to the accompanying Declaration of Larry Willemsen.

Figures 3 and 4 of Urset are reprinted below (Dabney Decl. ¶¶ 7-8 & Exs. 6-7):

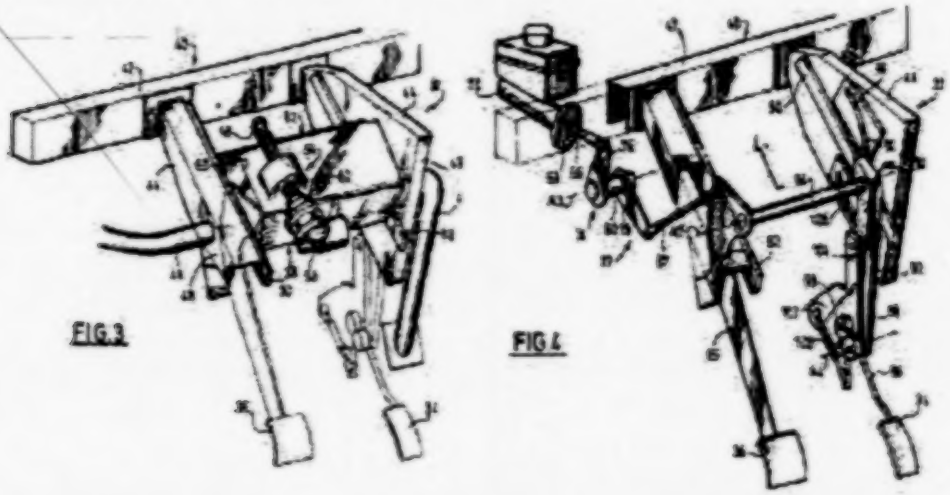

In the above design, an adjustable pedal assembly is disclosed comprising a mounting arrangement (40, 44, 46, 52) designed for attachment to a vehicle structure. A pedal (34) is pivotally supported for rotation about a first pivot axis (A4) with respect to the mounting arrangement. An "adjustment element" (90) is pivotally supported on a shaft

(64) for rotation about a second pivot axis (A2) that is parallel to the first. A drive mechanism (56) is operably connected to the "adjustment element" (90) and causes it both to slide and to rotate about its pivot axis (A2), thereby moving the pedal (34) between a plurality of operable positions. Mounted adjacent to the accelerator pedal (34) is an "accelerator potentiometer" (98) whose electronic output varies "as a function of the angular position of the pedal 34 about its pivoting axis". The output of the disclosed "accelerator potentiometer" is independent of the pedal's adjustment movement between operable positions (Kruger Decl. ¶ 33; Willemsen Decl. ¶ 30 & Ex. 6; see Exhibit 1 hereto).

Under 35 U.S.C. § 282, "[t]he burden of establishing invalidity of the patent or any claim thereof shall rest with the party asserting such invalidity." Further, "the facts to support a conclusion of invalidity of an issued patent must be proved by clear and convincing evidence." *Ryko*, 950 F.2d at 716. These principles flow from the presumed expertise of the Patent Office in discharging its statutory functions, and the deference ordinarily due a Government agency when it considers a matter falling within its jurisdiction. *See American Hoist & Derrick Co.* v. *Sowa & Sons, Inc.*, 725 F.2d 1350, 1359 (Fed. Cir.), *cert. denied*, 469 U.S. 821 (1984).

But where, as here, an invalidity defense relies on prior art that was never considered by the Patent Office in issuing a challenged patent, there is no reason for a Court to defer to any non-existent judgment of the Patent Office with respect to the uncited art:

Appendix E

> When an attacker, in sustaining the burden imposed by § 282, produces prior art or other evidence that was *not* considered in the PTO, there is . . . *no reason to defer* to the PTO so far as *its* effect on validity is concerned. Indeed, new prior art not before the PTO may so clearly invalidate a patent that the burden is fully sustained merely by proving its existence and applying the proper law. . . . When new evidence touching validity of the patent not considered by the PTO as relied on, the tribunal considering it is not faced with having to *disagree* with the PTO or with *deferring* to its judgment or with taking its expertise into account.

American Hoist, 725 F.2d at 1359-60 (emphasis in original).

"A patent, in the last analysis, simply represents a legal conclusion reached by the Patent Office," typically reached "in an *ex parte* proceeding, without the aid of the arguments which could be advanced by parties interested in proving patent invalidity." *Lear* v. *Adkins*, 395 U.S. 653, 670 (1969). The present case is a paradigm of one in which "new prior art not before the PTO . . . so clearly invalidate[s] a patent that the burden is fully sustained merely by proving its existence and applying the proper law." *American Hoist*, 725 F.2d at 1359-60.

Here as set forth above, in Willemsen Exhibit 6, and in the compact disk annexed as Exhibit 1 hereto, a single reference — Urset — clearly discloses each and every structure recited in Claim 1 of the '239 Patent. That claim is

accordingly invalid under 35 U.S.C. § 102(a). *Celeritas*, 150 F.3d at 1361.

Claim 1 of the '239 Patent is also fully anticipated by the adjustable pedal assembly that was installed as optional equipment in the 1975 Pontiac Grand Ville (Willemsen Decl ¶ 27 & Ex. 3; Kruger Decl. ¶ 18 & Ex. 1; see Exhibit 1 hereto). A computer animation, comparing the words of Claim 1 of the '239 Patent with 3-dimensional images of the 1975 Grand Ville accelerator pedal assembly disclosure, appears in the file named "Pontiac_239_claim_1.mpeg" in Exhibit 1 to this Brief. A conventional claim chart comparing the language of Claim 1 of the '239 Patent with photographs of the 1975 Grand Ville accelerator pedal assembly appears in Exhibit 3 to the accompanying Declaration of Larry Willemsen.

II. THE '695 PATENT IS INVALID UNDER 35 U.S.C. § 102

The disclosure of the '695 Patent (see Exhibit 4 hereto) is identical to that of the '239 Patent. The only difference between the '695 Patent and the '239 Patent is that the two claims of the '695 Patent include some additional descriptions of the alleged "inventions" that are not present in Claim 1 of the '239 Patent.

The '695 Patent is invalid under 35 U.S.C. § 102(a), because both of its claims are fully anticipated by Urset and the 1975 Pontiac Grand Ville accelerator pedal assembly (*see* Willemsen Decl. ¶ 28 & Ex. 4; Kruger Decl. ¶¶ 19-24 & Ex. 1). Computer animations, comparing the words of Claims 1 and 2 of the '695 Patent with 3-dimensional images of the

Appendix E

Urset disclosure and the 1975 Pontiac Grand Ville accelerator pedal assembly, appear in the files whose names include "Urset" and "Pontiac" in the accompanying compact disk (see Exhibit 1 hereto). Conventional claim charts, comparing the language of Claims 1 and 2 of the '695 Patent with the Urset disclosure and the 1975 Pontiac Grand Ville accelerator pedal assembly, appear in Exhibits 4 and 7 to the accompanying Declaration of Larry Willemsen.

For the same reasons that Claim 1 of the '239 Patent is invalid under 35 U.S.C. § 102(a), Claims 1 and 2 of the '695 Patent are also and equally invalid under that statute. Each and every structure recited in Claims 1 and 2 of the '695 Patent is disclosed in Urset (*see* Exhibit 1 hereto; Willemsen Decl ¶ 31 & Ex. 7). Each and every structure recited in Claims 1 and 2 of the '695 Patent is also disclosed in the 1975 Pontiac Grand Ville pedal assembly (*id.* ¶ 28 & Ex. 4). These references are, without more, fatal to the validity of the '695 Patent.

When it issued the '695 Patent to THC's assignor, the Patent Office explained its action as follows (Dabney Decl. ¶ 15 & Ex. 14 at 26):

> The following is an examiner's statement of reasons for allowance: The prior art taken as a whole, neither teaches nor renders obvious an adjustable pedal assembly comprising a mounting arrangement, at least one pedal, an adjustment element, a first pivot axis connecting the pedal to the adjustment element, and a second pivot axis connecting the adjustment element to the

> mounting arrangement, said axises being parallel, and wherein the pedal is pivotal about the first axis which is movable with the adjustable element about the second axis (connected at the mounting arrangement).

When it made the above-quoted statement, the Patent Office did not have the benefit of Urset, the 1975 Pontiac Grand Ville Pedal, or U.S. Patent No. 2,860,720 to Huff ("Huff"; see Exhibit 13 hereto; Willemsen Decl. ¶ 40 & Ex. 14), each of which references disclosed the very combination of structure whose purported non-existence was the expressly stated basis for the Patent Office's issuance of the '695 Patent to Teleflex.[11] The record of this case shows, clearly and convincingly, that both claims of the '695 Patent are fully anticipated by prior art, and are therefore invalid under 35 U.S.C. § 102.

III. CLAIM 4 OF THE '565 PATENT IS INVALID UNDER 35 U.S.C. § 103.

35 U.S.C. § 103(a) provides:

> A patent may not be obtained though the invention is not identically disclosed or described as set forth

---

11. The Huff reference (see Exhibit 13 hereto) discloses all of the structure recited in the '239 Patent and '695 Patent claims except for the recited "electric generator", an off-the-shelf part used in vehicles whose engines utilize electronic, rather than cable-actuated, throttle controls. The Patent Office statement quoted in the text demonstrates clearly that there was and is no patentable novelty in attaching an off-the-shelf pedal position sensor to an otherwise old adjustable pedal configuration. The Huff reference is discussed more fully in Part IV, *infra*.

> in section 102 of this title, if the differences between the subject matter sought to be patented and the prior art are such that the subject matter as a whole would have been obvious at the time the invention was made to a person having ordinary skill in the art to which said subject matter pertains.

"Obviousness is a question of law based upon underlying factual determinations." *Sandt Technology, Ltd.* v. *Resco Metal & Plastics Corp.*, 264 F.3d 1344, 1354 (Fed. Cir. 2001) (quoting *Heidelberger Druckmaschinen AG* v. *Hantscho Commercial Prods., Inc.*, 21 F.3d 1068, 1071 (Fed. Cir. 1994)). "Therefore, a district court can properly grant, as a matter of law, a motion for summary judgment on patent invalidity when the factual inquiries into obviousness present no genuine issue of material facts." *Ryko Mfg Co.* v. *Nu-Star, Inc.*, 950 F.2d 714, 716 (Fed. Cir. 1990).

In *Graham* v. *John Deere Co.*, 383 U.S. 1, 17-18 (1966), the Supreme Court set forth the analytical framework for determining questions of patent invalidity under 35 U.S.C. § 103:

> Under § 103, the scope and content of the prior art are to be determined; differences between the prior art and the claims at issue are to be ascertained; and the level of ordinary skill in the pertinent art resolved. Against this background, the obviousness or nonobviousness of the subject matter is determined. Such secondary considerations as commercial success, long felt

> but unsolved needs, failure of others, etc., might be utilized to give light to the circumstances surrounding the origin of the subject matter sought to be patented.

As set forth below, Claim 4 of the '565 Patent is written so broadly as to leave no patentable "differences" between the claimed subject matter and the prior art of those patents. The absence of patentable "differences between the prior art and the claims at issue," 383 U.S. at 17, is demonstrated in the file named "Asano_565_claim_4.mpeg" of Exhibit 1 to the accompanying Declaration of Daniel H. Kruger and attached to this Brief as Exhibit 1. A conventional claim chart demonstrating the invalidity of the '565 Patent are submitted as Exhibit 12 to the accompanying Declaration of Larry Willemsen.

The '565 Patent (see Exhibit 5 hereto) discloses a "vehicle control pedal apparatus 12", the two preferred embodiments of which appear in the figures below:

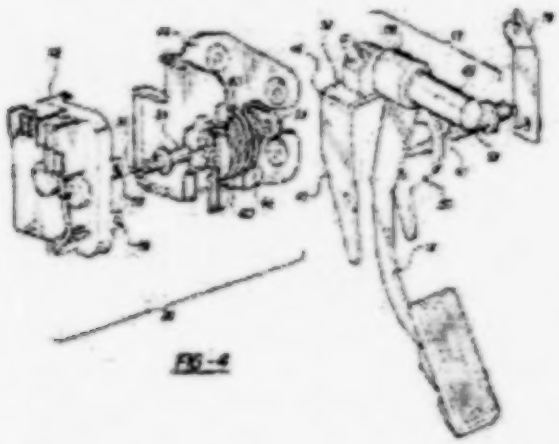

Appendix E

In the above design, an "adjustable pedal assembly 22" is pivotally mounted on a support (18, 44). A screw drive mechanism housed in a guide member (62) causes the pedal (14) to slide back and forth along the guide member. The position of the pivot (24) remains constant while the pedal arm (14) slides back and forth along a tubular guide member (62). In one embodiment, the assembly includes a "cable attachment member 78" for actuating an engine throttle cable. In a second embodiment, in lieu of or in addition to the "cable attachment member 78", the disclosed pedal assembly can optionally include an electronic pedal position sensor (42), characterized in the '565 Patent as an "electronic throttle control 28" (see Exhibit 5 hereto at col. 3, line 29). The disclosed "electronic throttle control" is a modular unit (42) attached to a portion of the pedal's support (18, 44) and engaged with the pivot member (34) of the pedal arm (14).

A. Scope and Content of Prior Art.

"The relevant art is defined by the nature of the problem confronting the would-be inventor." *Ryko*, 950 F.2d at 716. Here, the "problem" ostensibly confronting the '565 inventor was to provide an adjustable pedal assembly that could be installed in a vehicle whose engine utilized an electronic, rather than a cable-actuated, throttle control system. Thus, as the references cited on the face of the '565 Patent make clear, the "relevant art" to that patent includes (a) adjustable vehicle pedal assemblies and (b) electronic pedal position sensors.

Appendix E

The prior art to the '565 Patent includes U.S. Patent No. 5,010,782 filed July 28, 1989 ("Asano"; see Exhibit 6 hereto). Figure 5 of Asano is reproduced at right, below; a computer animation of Asano appears at left, below (see Kruger Decl. ¶ 5):

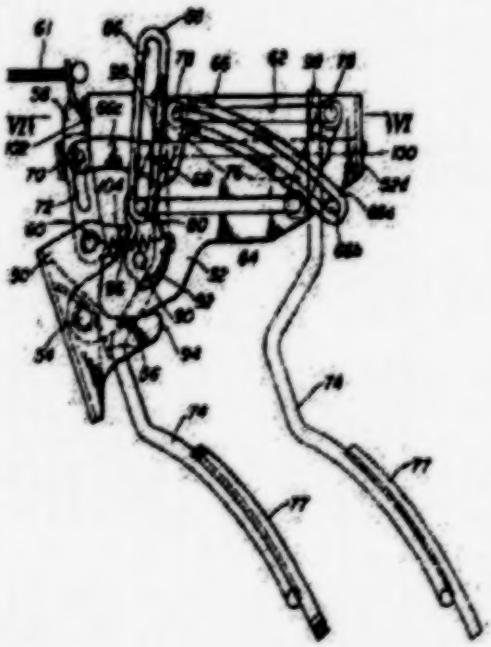

In the above design, an adjustable pedal assembly is pivotally mounted on a support (50). The assembly includes a cable attachment structure (58) for actuating an engine throttle cable (61). A screw drive (100) housed in a guide member (52) causes the pedal (74) to slide back and forth along the guide member. The position of the support pivot (54) remains constant while the pedal arm (74) slides back and forth along a guide member (52). The operation of Asano is depicted in the computer animation file named "Asano_565_claim_4.mpeg" on the disk submitted as part of Exhibit 1 to the accompanying Declaration of Daniel H. Kruger. Asano was not cited to the Patent Office during

prosecution of the '565 Patent or its parent, even though Teleflex's and THC's patent counsel had cited Asano to the Patent Office during prosecution of the "parent" of the '239 Patent (see Exhibit 3 hereto).[12]

The prior art to the '565 Patent further includes specific teachings with respect to the desirability of electronic, as distinguished from mechanical, throttle controls in

---

12. The design disclosed in the '565 Patent is virtually identical to that disclosed in U.S. Patent No. 5,722,302 filed October 2, 1996, and originally assigned to Comfort Pedals, Inc. (see Exhibit 1 at Rixon_Engelgau_565_4_compare.mpeg; Kruger Decl. ¶ 29 & Ex. 1; Willemsen Decl. ¶ 32 & Ex. 11; Dabney Decl. ¶ 9 & Ex. 8. KSR believes that pedal assemblies embodying the design disclosed in the '302 Patent were on sale or in public use long prior to January 26, 1998; however, THC and Teleflex have thus far interposed groundless objections to making discovery on this point. KSR has deferred challenging these objections in view of the pending motion to dismiss for lack of subject matter jurisdiction and KSR's co-pending motion filed April 25, 2003, for a stay of discovery-related proceedings pending determination of the subject matter jurisdiction issue.

The prior art status of the Ford Expedition pedal disclosed in Rixon '302 is a matter that KSR would pursue in discovery if this action were dismissed and proceedings in the Delaware Action resumed, or if the discovery period in this action were extended. In order to avoid a factual dispute concerning cumulative evidence of invalidity, KSR does not, in this motion, rely on Rixon '302, except to note that (a) Asano was cited during prosecution of Rixon '302, and thus not surprisingly, (b) the claims of Rixon '302 are much narrower than the claims of the '565 Patent.

automotive vehicles, from the point of view of engine management and pedal operability:

> Control of throttle in passenger cars and trucks is usually dependent upon the position of an accelerator pedal, which represents vehicle operator demand. The accelerator pedal position, or demand, is then linked to the engine throttle. Accelerator pedal movement was transmitted for many years through mechanical linkages consisting of solid rods and ball joints. In some applications, the solid rod linkage was replaced by a cable within a sleeve, referred to in the trade as a Bowden cable. These mechanical linkages are prone to problems which tend to affect all mechanical systems, such as sticking, freezing, breakage, and other mishaps. In addition, adaptation of the mechanical linkages to allow for special features such as more efficient energy utilization, reduced emissions, idle speed control, and "limp-home" modes of operation are generally not practical, or even possible in some cases.
>
> By using a sensor to sense accelerator demand, a servo-motor to control the throttle position, and a computer system to control operation of the throttle relative to the input from the accelerator pedal sensor and other various sensed inputs, a variety of special features may be incorporated in the accelerator-throttle linkage. In these computer-assisted systems, the throttle linkage is commonly

> referred to as a "drive-by-wire" system, since the linkage is electrical.

U.S. Patent No. 5,998,892 filed as of September 4, 1996; see Exhibit 7 at col. 1, lines 40-64.

The prior art to the '565 Patent further includes express teaching with regard to the desirability of electronic, as distinguished from mechanical, linkages between vehicle accelerator pedals and engine throttles:

> In the automotive art, accelerator type foot pedals are employed for controlling the flow of fluids to the engines. These usually include a pedal mounting affixed to the vehicle body and a series of links and levers, or Bowden wires, connecting the pedal to the carburetor, fuel injector, controller or the link. These link connections usually must be designed to withstand and accommodate engine movements relative to the vehicle frame, as well as to provide accurate control despite such movements. In addition, space must be provided for the linkages to function properly. The choices for routing of the mechanical control rods or wires are limited by their nature. With electrical sensing means directly associated with the pedal, the connection to a carburetor or the like can be accomplished with electrical wiring which relatively speaking, can free the connection problems from the special physical relationships of the older mechanical systems.

Appendix E

U.S. Patent No. 5,408,899 filed June 13, 1993, at col. 1 lines14-32; see Exhibit 8.

The prior art to the '565 Patent further includes express teachings with respect to the desirability of locating an electronic pedal position sensor adjacent to a vehicle's accelerator pedal, inside the vehicle's passenger compartment, rather than in a vehicle's engine compartment:

> An early design of an electronic control system located the movement detecting sensor in the engine compartment near the fuel pump; however, this arrangement proved undesirable due to the complex mechanical linkage required to connect the foot pedal to the sensor. Moreover, the harsh operating environment of the engine compartment exposed the sensor to heat, oil and dirt, which can contribute to premature failure of sensitive components. Subsequent designs thus located the sensor in the cab or operator compartment, the sensor being incorporated in a foot pedal arrangement that included a means for providing rotative motion of a potentiometer in response to depression of the foot pedal.

U.S. Patent No. 5,241,936 filed September 9, 1991; see Exhibit 9, at col. 1 lines 52-65.

The prior art to the '565 Patent further includes a number of modular, self-contained pedal position sensors that (a) were specifically designed to be mounted on the pivot of an accelerator pedal, and (b) were specifically intended and

marketed for use to actuate electronic throttle controls in vehicles. One example of a modular prior art pedal position sensor is disclosed in U.S. Patent No. 5,385,068 filed December 18, 1992 (the "'068 Patent"; see Exhibit 10; Willemsen Decl. ¶ 12). Figure 1 of the '068 Patent, depicting a "position sensor 17", is reproduced below:

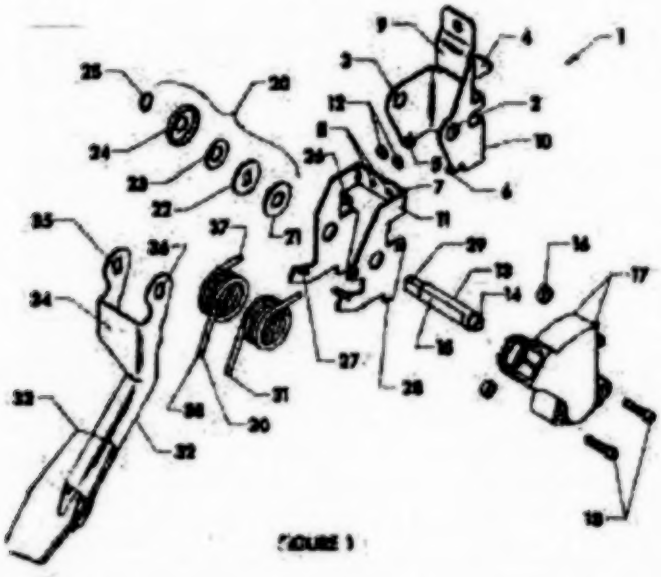

A second example of a modular prior art pedal position sensor is the "503 Series" pedal position sensor manufactured by CTS Corporation of Elkhart, Indiana ("CTS") and offered for sale in the United States continuously since at least 1993 (Willemsen Decl. ¶¶ 14-19 & Exs. 8-10). A physical sample of a CTS 503 Series pedal position sensor is being submitted with this Brief (*id.* ¶ 18). The modular design of the CTS 503 Series sensor enabled it to be installed on different makes and models of vehicle accelerator pedal assemblies at relevant times (*id.* ¶ 19). At relevant times CTS provided specifications identifying minimum requirements (e.g., minimum surface requirements for attachment points) that

any person of ordinary skill in the pedal design art could follow and use to design a pedal assembly that could accommodate a CTS 503 Series sensor (*id.* ¶ 21)

The prior art to the '565 Patent further includes the accelerator pedal assembly installed in certain 1994 Chevrolet C/K pick-up trucks depicted in Exhibit 11 to this Brief (the "1994 GM ETC Pedal"). The 1994 GM ETC Pedal included a CTS 503 Series position sensor mounted on the pedal's support bracket, adjacent to the pedal and engaged with the pivot shaft about which the pedal rotated in operation (Willemsen Decl. ¶ 16). Depression of the 1994 GM ETC Pedal caused a pivot shaft to rotate inside the position sensor engaged with the pedal's pivot shaft, producing electronic signal outputs that vary with the pedal's operating position (*id.*). At all relevant times, CTS 503 Series pedal position sensors were specifically designed to be engaged with the rotating pivot shaft of an accelerator pedal assembly, and were preferably mounted adjacent to an accelerator's pivot shaft as exemplified by the 1994 GM ETC Pedal shown in Exhibit 6 to this brief (*id.* ¶¶ 19, 21).

The prior art to the '565 Patent further includes at least two adjustable pedal assemblies incorporating an electronic pedal position sensor, namely, Urset (described above) and U.S. Patent No. 5,819,593 filed August 17, 1995 ("Rixon '593"; see Exhibit 12). Figure 2 of Rixon '593 is reproduced below:

Appendix E

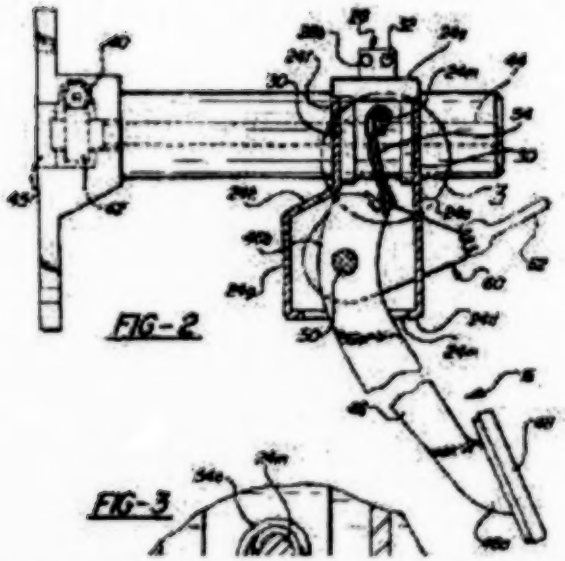

In the above design, an accelerator pedal (46) is pivotally mounted on the housing (24) of a sliding carrier assembly (12). A pedal position sensor, identified as "potentiometer 60", is engaged with the disclosed pedal's pivot shaft and emits varying electric signal outputs corresponding to the pedal's arm position as it pivots about the axis of the pivot shaft (50) between resting and applied positions. The pedal position sensor disclosed in Rixon is mounted in exactly the same way — engaged with the accelerator pedal's pivot shaft — as every other electronic pedal position sensor in the prior art of record, and also functions in exactly the same way as every other electronic pedal position sensor in the prior art of record.

B. Differences Between the Prior Art and Claim 4 of the '565 Patent

As is set forth in the computer animation file named "Asano_565_claim_4.mpeg" (see Exhibit 1 hereto; Kruger

Decl. ¶¶ 5-6), and as is also set forth in the claim chart submitted as Exhibit 12 to the accompanying Declaration of Larry Willemsen, Asano discloses each and every structure recited in claim 4 of the '565 Patent, with the exception of the optional "an electronic control (28) attached to said support" and "responsive to said pivot (24) for providing a signal (32) that corresponds to pedal arm position as said pedal arm pivots about said axis (26) between rest and applied positions." According to the '565 Patent, the recited "electronic control" can be "any of various electronic throttle control mechanisms known in the art, as the one described in" Rixon '593 (see Exhibit 12 hereto, at col. 3, lines 22-25).

C. The Level of Ordinary Skill in the Art at Relevant Times.

At relevant times, a person of average or "ordinary" skill in the art of the THC Patents would have had a minimum of two (2) years of college level training in mechanical engineering and two-three years' work experience spanning at least one complete pedal design "cycle" (Willemsen Decl. ¶ 20).[13] As set forth below, however, one need not have had

---

13. Teleflex contends that a person of "ordinary" skill in the art of the THC Patents would have had "an undergraduate degree in mechanical engineering (or an equivalent amount of industry experience) who has familiarity with pedal control systems for vehicles" (Dabney Decl. ¶ 6 & Ex. 5, answer to Interrogatory No. 6). For purposes of this motion, the Court may assume, for purposes of argument, the skill level contended for by Teleflex, to the extent it differs from KSR's description.

any training in the mechanical arts in order to see that the subject matter of claim 4 of the '565 Patent was neither novel nor patentable as of January 26, 1998.

D. Claim 4 of the '565 Patent Recites a Trivial and Obvious Variant of Asano.

With regard to the '565 Patent, the legal question raised by this motion is whether, to a person of ordinary skill in the pedal design art as of January 26, 1998, it would have been obvious to combine (a) the adjustable pedal assembly of Asano, with (b) an off-the-shelf electronic pedal position sensor, such as the CTS 503 Series pedal position sensor. Under well-settled law, "when determining the patentability of a claimed invention which combines two known elements, 'the question is whether there is something in the prior art as a whole to suggest the desirability, and thus the obviousness, of making the combination.'" *Ecolochem, Inc.* v. *Southern Cal. Edison Co.*, 227 F.3d 1361, 1372 (Fed. Cir. 2000) (quoting *In re Beattie*, 974 F.2d 1309, 1311-12 (Fed. Cir. 1992) (quoting *Lindemann Maschinenfabrik GmbH* v. *American Hoist & Derrick Co.*, 730 F.2d 1452, 1462 (Fed. Cir. 1984))).

The record here abounds with evidence suggesting the "desirability" of adding an electronic pedal position sensor to Asano at relevant times:

— As of January 26, 1998, a vehicle manufacturer's choice of fuel system dictated whether a vehicle's accelerator pedal needed to be coupled to an electronic pedal position sensor, or not (Willemsen Decl. ¶ 22). Vehicles equipped

with electronic throttle controls require, by their very nature, the use of electronic sensors capable of sensing an accelerator pedal's position (*id.* ¶ 11). To be installable in a vehicle whose engines utilized an electronic throttle control, such as certain 1994 Chevrolet C/K pick-up trucks, the Asano pedal would have *had* to be coupled to an electronic pedal position sensor (*id.*). The fundamental requirements of electronic throttle control systems, without more, provided compelling suggestion and motivation to add an electronic pedal position sensor to Asano: without such an addition, the Asano pedal could not be installed in a vehicle with an electronic throttle control system,

— As of January 26, 1998, prior art of record expressly taught that electronic pedal position sensors coupled to electronic throttle controls had various operational advantages over mechanical cable linkages coupled to mechanical throttle controls (see Exhibits 7-9 hereto; Willemsen Decl. ¶ 9). These advantages (e.g., reduced emissions, better mileage, compatibility with "traction control" or similar features, avoidance of sticking or freezing of cables, etc.) all clearly pointed to the desirability of adding an electronic pedal position sensor to Asano: without such an addition, the owner of Asano could not offer the benefits of the Asano design to a vehicle manufacturer intending to utilize engine features dependent on electronic throttle control operation.

— As of January 26, 1998, prior art of record expressly taught that the preferred location for an electronic pedal position sensor in a vehicle was adjacent to the pivot shaft of an accelerator pedal (Willemsen Decl. ¶ 13). As of January

26, 1998, attaching a position sensor to a vehicle's accelerator pedal pivot shaft was a standard technique used to enable accelerator pedals to communicate with and actuate electronic throttle controls (*id.*). A prior art CTS 503 Series sensor could have been added to the Asano pedal design without materially altering that pedal (*id.* ¶ 36).

— As of January 26, 1998, prior art of record expressly taught that electronic pedal position sensors could be coupled to the accelerator pedal in an adjustable pedal assembly in exactly the same way as such sensors have been installed in non-adjustable pedal assemblies, namely, through engagement with the pivot shaft of the accelerator pedal (*compare* Exhibit 11 hereto (1994 GM ETC Pedal, with position sensor engaged with accelerator pedal pivot shaft) *with* Exhibit 12 hereto (Rixon adjustable pedal, with position sensor (60) engaged with accelerator pedal pivot shaft)).

The motivations for combining Asano with an electronic pedal position sensor, described above, are at least as clear and convincing as motivations that the Federal Circuit has found sufficient to invalidate patent claims under 35 U.S.C. § 103. For example, in *Ryko Mfg. Co.* v. *Nu-Star, Inc.*, 950 F.2d 714 (Fed. Cir. 1990), the patent-in-suit claimed an automatic car wash activated by an electronic keypad entry system. *Id.* at 717. The plaintiff alleged that he was the first to think of using a keypad entry system to activate a car wash (as distinct from some other type of powered system). In affirming a grant of summary judgment of invalidity under 35 U.S.C. § 103, the Federal Circuit in *Ryko* held that known advantages of using electronic keypad systems to control powered systems in general (e.g., garage doors) provided

ample motivation for using such a system to control a car wash. The present case is considerably more compelling than *Ryko*; for here, the record shows not only that pedal position sensors offer exactly the same functional advantages when coupled to adjustable and non-adjustable pedal systems, but that the choice of a vehicle engine's fuel management system, when electronic, actually *dictates* use of electronic pedal position sensors coupled to a vehicle's accelerator pedal as described above.

In *Novo Nordisk A/S* v. *Becton Dickinson & Co.*, 304 F.3d 1216 (Fed. Cir. 2002), the patent-in-suit claimed a 30 gauge needle in a pen-style insulin injection system. *Id.* at 1218-19. The prior art disclosed 30-gauge needles and pen-style insulin injection systems, but the plaintiff alleged that it was the first to think of offering the two features in combination. *Id.* In affirming a judgment holding the patent invalid under 35 U.S.C. § 103, the Federal Circuit cited evidence that the thinner needles "reduced the pain associated with self-administered insulin injections," and that "the known pain reduction provided the requisite motivation to narrow the needle" in the accused devices. *Id.* at 1219. Here, the known desirability, if not necessity, of utilizing electronic pedal position sensors to cooperate with an electronic throttle control in a vehicle provided "motivation" at least a compelling as that found invalidating in *Novo Nordisk*.

In *Richardson-Vicks Inc.* v. *Upjohn Co.*, 122 F.3d 1476 (Fed. Cir. 1997), the patent-in-suit claimed an over-the-counter ("OTC") medicine that combined the analgesic, ibuprofen, and the decongestant pseudo ephedrine. *Id.* at 1477. Although both medicaments were in the prior art, and

the prior art also included tablets combining pseudo ephedrine with aspirin and with acetaminophen, the plaintiff claimed that it was the first to think of offering pseudo ephedrine in a tablet with ibuprofen. In upholding a judgment of invalidity under 35 U.S.C. § 103, the Federal Circuit found that there was "strong motivation to combine the two ingredients into a single unit dosage" in view of publications announcing FDA intent to permit OTC sales of ibuprofen, and OTC industry anticipation that 'ibuprofen would quickly begin displacing acetaminophen and aspirin as the preferred analgesic." *Id.* at 1484. So too here, as of January 26, 1998, an increasing number of vehicles sold in the United States were being equipped with electronic throttle control systems because such systems offer various operational advantages over cable-actuated throttle control systems (Willemsen Decl. ¶ 9). This increased demand for pedals compatible with electronically controlled throttle systems provided clear commercial motivation for combining Asano and a CTS 503 Series sensor that was identical, in principle, to the motivation identified in *Richardson-Vicks* as warranting a conclusion of obviousness.

During the prosecution of the '565 Patent, the Patent Office took the position that "the use of an electronic throttle control means (28) attached to a support member (40, 26) in a pedal assembly is old and well-known in the art" (Dabney Decl. ¶ 17 & Ex. 16 at 4).[14] THC's assignor did not, and could not, dispute this contention. Instead, counsel for THC

---

14. The Patent Office notably took the same position during prosecution of both the '239 Patent (Dabney Decl. ¶ 14 & Ex. 13 at 3-5) and the '695 Patent (id. ¶ 15 & Ex. 14 at 13).

and Teleflex argued that claim 4 of the '565 Patent was patentable because a *mechanical* limitation recited in the claim, namely, "wherein the position of said pivot (24) remains constant while said pedal arm (14) moves in fore and aft directions with respect to said pivot" (see Exhibit 5 hereto at col. 6, lines 34-36), purportedly did not exist in the prior art.[15] In fact, as illustrated in accompanying compact disk (Kruger Decl. Ex. 1; Willemsen Decl. ¶ 36), Asano discloses an adjustable pedal assembly whose support pivots remains in a constant position during pedal arm adjustment — the very feature that defendant's assignor argued distinguished claim 4 of the '565 Patent from the prior art.

Under a long and unbroken line of Supreme Court decisions, "[a] patent for a combination which only unites old elements with no change in their respective functions . . . obviously withdraws what already is known into the field of its monopoly and diminishes the resources available to skillful men." *Sakraida* v. *Ag Pro, Inc.*, 425 U.S. 273, 281 (1976) (quoting *Great Atl. & Pac. Tea Co.* v. *Supermarket Equip. Corp.*, 340 U.S. 147, 152 (1950)). The Supreme Court has thus repeatedly articulated and applied a special "test of

---

15. With reference to what became claim 4 of the '565 Patent, defendant's assignor argued: "Independent claim 24 is a duplicate of claim 15 in the parent application except the word 'throttle' has been eliminated. . . . Accordingly, claim 24 is allowable for the same reasons claim 15 was allowed in U.S. Patent No. 6,129,241" (Dabney Decl. ¶ 17 & Ex. 16, at p. 11). THC's assignor argued that "claim 15 in the parent application" was allowable because the claim "require[d] the position of the pivot to remain constant while the pedal arm moves in fore and aft directions with respect to the pivot" (id. ¶ 16 & Ex. 15 at p. 10). That is exactly the design of Asano.

validity of combination patents," *Sakraida*, 425 U.S. at 482, which test asks whether an alleged invention "simply arranges old elements with each performing the same function that it had been known to perform," or whether a claimed combination produces "a 'new or different function'". *Id.* (quoting *Anderson's-Black Rock, Inc.* v. *Pavement Salvage Co.*, 396 U.S. 57, 60 (1969) (quoting *Lincoln Engineering Co.* v. *Stewart-Warner Corp.*, 303 U.S. 545, 549 (1938))).

In the present case, Claim 4 of the '565 Patent plainly flunks "the test of validity of combination patents." *Sakraida*, 425 U.S. at 282 (quoting *Anderson's-Black Rock*, 396 U.S. at 60). The claim purports to combine a pre-existing pedal assembly, such as Asano, with a pre-existing electronic position sensor, such as the CTS 503 series sensor, with both components doing nothing more than each component was designed, individually, to do. Claim 4 of the '565 Patent is thus indistinguishable in principle from the patent claim held invalid in *Anderson's-Black Rock*, where the claimed invention consisted of combining an old radiant heat burner with an old black top spreader, with neither component performing any new or different function from what they had been designed to do originally. As a matter of law, such a combination is "not an invention by the obvious-nonobvious standard." 396 U.S. at 63. "The mere aggregation of a number of old parts or elements which, in the aggregation, perform or produce no new or different function or operation than that theretofore performed or produced by them, is not patentable invention." *Great Atl.*, 340 U.S. at 151 (quoting *Lincoln Engineering*, 303 U.S. at 549).

In view of the uncited Asano reference, the subject matter of claim 4 of the '565 Patent consists of nothing more than following the instructions associated with a CTS 503 Series position sensor and using such a sensor for its intended and designed purpose on a pre-existing adjustable pedal assembly design (Willemsen Decl. ¶¶ 17-21 & Exs. 8-10). The claim is clearly invalid under 35 U.S.C. § 103.

E. Secondary Considerations.

KSR is unaware of any secondary considerations as could support a legal conclusion of non-obviousness with respect to the subject matter of claim 4 of the '565 Patent (Willemsen Decl. ¶¶ 42-44). In response to interrogatories directed to this topic, Teleflex identified no secondary considerations tending to show non-obviousness (Dabney Decl. ¶ 6 & Ex. 5, answers to Interrogatory Nos. 8, 13).

Notably, however, as the Federal Circuit held in *Ryko*, summary judgment may be granted under 35 U.S.C. § 103 even where a patentee (which Teleflex is not) puts forward evidence of "secondary considerations" favoring patentability. The plaintiff in *Ryko* submitted affidavits that the claimed invention in that case — use of an electronic keypad to control a car wash — had enjoyed commercial success, had met a long felt need, and that others had tried and failed to solve the problem solved by the claimed invention. 950 F.2d at 719. The Federal Circuit nevertheless upheld the District Court's award of summary judgment invalidating the plaintiff's patent under 35 U.S.C. § 103, holding that "secondary considerations did not carry sufficient weight to override a determination of obviousness

based on primary considerations," and that "a court is entitled to weight all the considerations, primary and secondary, and then render its decision" on the question of obviousness. *Id.*

IV. THE '239 AND '695 PATENTS ARE INVALID UNDER 35 U.S.C. § 103.

For substantially the same reasons that claim 4 of the '565 Patent is invalid under 35 U.S.C. § 103, claim 1 of the '239 Patent and claims 1 and 2 of the '695 Patent are equally invalid under that statute. The desirability, and thus the obviousness, of using pedal position sensors on vehicle pedal assemblies intended for use in vehicles having electronic throttle controls, described at pp. 23-27, *supra*, was no less documented as of November 20, 1996 (the critical date for the '239 and '695 Patents under 35 U.S.C. § 102(b)) than it was on January 26, 1998. The level of ordinary skill in the pedal design art was also the same as of both dates (Willemsen Decl. ¶ 20).

It remains only to be demonstrated that, as with the '565 Patent, the prior art considered by the Patent Office during the prosecution of the '239 and '695 Patents did not include a key reference, Huff (see Exhibit 13 hereto; Willemsen Decl. ¶¶ 38-40 & Exs. 13-14), which disclosed the exact mechanical configuration claimed in the '239 and '695 Patents. Figure 2 of Huff is reproduced at right, below; a computer animation of the Huff adjustable pedal assembly is reproduced at left, below (Kruger Decl. ¶ 7 & Ex. 1):

Appendix E

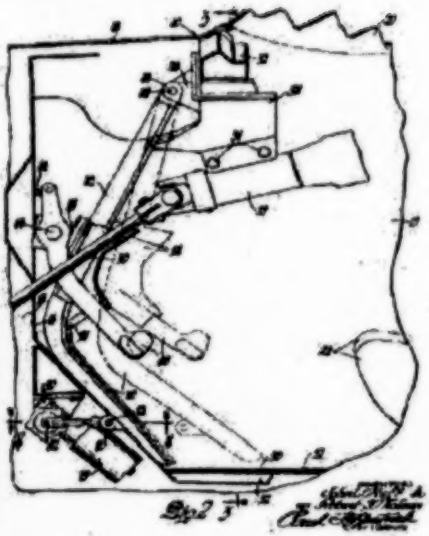

In the above design, an accelerator pedal (62) is pivotally supported for rotation about a first pivot axis (64). An "adjustment element" (42) is pivotally supported on a mounting arrangement (38) for rotation about a second pivot axis (48) that is parallel to the first. A drive motor (78) is operably connected to the "adjustment element" (42) and causes it to rotate about its pivot axis, thereby causing the pedals also to rotate about that axis. The accelerator pedal (62) is connected to a rod for actuation of a throttle control. Huff was not cited to the Patent Office during prosecution of the '239 Patent or the '695 Patent.

As set forth above, in the animations named "Huff" on Exhibit 1 hereto, and in the claim charts submitted as Exhibits 13 and 14 to the accompanying Declaration of Larry Willemsen, the sole difference between Huff, on the one hand, and the claimed "inventions" of the '239 and '695 Patents, on the other, is the presence of an optional, off-the shelf pedal position sensor, mounted on an accelerator pedal

pivot in exactly the same way as the pedal position sensor in the 1994 GM ETC Pedal, Urset, Rixon '593 and every other prior art pedal position sensor of record.

For all of the reasons set forth on pp. 28-35, above, claim 1 of the '239 Patent and claims 1 and 2 of the '695 Patent are invalid under 35 U.S.C. § 103. As of November 20, 1996, as the Patent Office repeatedly ruled during the prosecution of those patents,[16] there was no patentable novelty in adding on off-the-shelf pedal position sensor to a pre-existing adjustable pedal assembly, such as Huff. A position sensor could have been added to Huff without materially altering the design of Huff (Willemsen Decl. ¶ 41) and an artisan would have been naturally motivated to do this in order to render the Huff design usable in a modern vehicle whose fuel system was managed by an electronic throttle control (*id.* at ¶ 11). As of November 20, 1996, abundant motivations, incentives, and teachings existed to combine a modular position sensor, such as the CTS 503 Series sensor, with the Huff adjustable pedal assembly.

16. See Dabney Decl. ¶ 15 & Ex. 14 at 13; ¶ 14 & Ex. 13 at 3-5.

Appendix E

CONCLUSION

For all the reasons set forth above, defendant's motion for summary judgment should granted.

Dated: July 7, 2003 Respectfully submitted,

DICKINSON WRIGHT PLLC

By_____

Kenneth J. McIntyre (P17450)
L. Pahl Zinn (P57516)
Attorneys for Defendant
500 Woodward Avenue,
Suite 4000
Detroit, MI 48226-3425
(313) 223-3500

JAMES W. DABNEY
Pennie & Edmonds LLP
Attorneys for Defendant
1155 Avenue of the Americas
New York, NY 10036
(212) 790-9090

Appendix E

Exhibit	Supplemental Joint Appendix page
7	23
8	31
9	42
10	51

APPENDIX F — DECLARATION OF LARRY WILLEMSEN DATED AND FILED JULY 7, 2003

UNITED STATES DISTRICT COURT
EASTERN DISTRICT OF MICHIGAN
SOUTHERN DIVISION

Case No: 02-74586

TELEFLEX INCORPORATED,

Plaintiff,

vs.

KSR INTERNATIONAL CO.,

Defendant.

DECLARATION OF LARRY WILLEMSEN

1. My name is Larry Willemsen. My business address is 95 Erie Street South, Ridgetown, Ontario, Canada N0P 2C0. I am Vice President of Design Engineering of KSR International Company ("KSR"). I have been employed by KSR continuously since 1985.

2. KSR is a corporation organized and existing under the laws of Nova Scotia, Canada, having its principal place of business in Ridgetown, Ontario, Canada.

Appendix F

3. KSR manufactures and supplies pedal systems, throttle controls, latches, handles, and other components installed as original equipment in various makes of vehicles manufactured by General Motors Corporation ("GM"), Ford Motor Company ("Ford"), DaimlerChrysler Corporation ("Daimler"), and other vehicle manufacturers worldwide. A description of KSR's business may be found at the "web-site" associated with www.ksrint.com.

4. I attended Fanshawe College of Applied Arts and Technology between 1980 and 1984 concentrating in mechanical engineering technology. My initial employment by KSR in 1985 was as a Design Draftsman in which capacity I had personally designed all aspects of automotive pedal and latch products then offered sold by KSR.

5. Between 1988 and 1992 I held the title Product Design Engineer and worked as a liaison engineer to Ford Motor Company ("Ford") in connection with the design and development of brake, clutch, and accelerator pedals and latch systems that ultimately were installed in various Ford-manufactured car and light truck models. I personally worked on the design and development of pedal assemblies for the Ford programs FN9/DN5 (1986 Taurus/Sable/Continental), 90 Mark (1990 Lincoln Mark VII), FN36/EN53 (1992 Crown Vic/Grand Marquis/Town Car), FN10/MN12 (1992 T'Bird/ Cougar), the 1992 F-series pick-up trucks, and the 1992 ¾ Econoline.

6. Between 1992 and 2000 I held the title Product Design Engineering Manager and led a team of product engineers, designers, and prototype and testing technicians

engaged in the design and development of automotive pedal assemblies and other automotive products. During this period, I personally worked on the design and development of pedal assemblies for the Ford programs UPN105/106 (1995 Ranger/Explorer), WIN88 (1995 Windstar), DN101/ FN74 (1996 Taurus/Sable/Continental) and SN95 (1996 Mustang). During this period KSR also replaced Delphi Corp. as the supplier of accelerator pedals installed as standard equipment in Chevrolet and similar GMC pick-up trucks manufactured by GM and sold in the United States.

7. Annexed hereto as Exhibit 1 are photographs of a 1975 Pontiac Grand Ville convertible equipped with optional adjustable pedals. In the field of automotive pedal design, an "adjustable" pedal is one whose resting position can be moved, or "adjusted", relative to a driver's seating position. The adjustable pedal assembly depicted in Exhibit 1 includes (a) a mounting bracket ("A") for attachment to a vehicle structure; (b) an accelerator pedal ("B") mounted on an adjustment arm ("C") for pivotal rotation about a first pivot axis; (c) a drive mechanism ("D") connected to the adjustment arm ("C") for pivotal rotation of the latter about a second pivot axis; and (e) an electronic sensor ("E") that responds to movement of the pedal for controlling a vehicle system, namely, an automatic transmission.

8. The 1975 Pontiac Grand Ville, like most cars built before 2002, came with an engine whose throttle was actuated by a cable. In vehicles equipped with cable-actuated throttle controls, depression of the accelerator pedal typically causes a cable to pull on a valve housed in a carburetor or fuel

injection unit, thereby increasing the amount of fuel and air entering the engine and hence engine speed.

9. Commencing in the mid-1990's, increasing numbers of vehicles sold in the United States came equipped with engines whose throttles were actuated electronically, by computerized systems commonly known as "electronic throttle controls" or "ETC's". Electronic throttle controls are claimed to offer various operational advantages as compared with traditional cable-actuated throttle controls. These advantages include reduced tailpipe emissions, improved fuel economy, simplified cruise controls, and improved slip reduction and stability systems that are dependent on computer-controlled throttle actuation.

10. In vehicles whose engines are equipped with electronic throttle controls, depression of the accelerator pedal typically causes a shaft to rotate inside an electronic pedal position sensor, such as a potentiometer, resulting in the generation of an electronic signal of varying strength depending on the pedal position. The electronic signal is communicated to a computer processor that in turn causes a fuel injection unit or other fuel system to vary the amount of fuel and air entering the engine.

11. As of November 20, 1996 and January 26, 1998, the design of accelerator pedals installed in cars and light trucks sold in the United States was substantially determined by the type of engine and fuel system that an automaker specified was going to be installed in a vehicle. As of both November 20, 1996 and January 26, 1998, vehicles equipped with electronic throttle controls, by their very nature, required

the use of electronic sensors capable of sensing an accelerator pedal's position and emitting electrical signals corresponding to the pedal's position.

12. As of November 20, 1996 and January 26, 1998, one or more companies in the United States including CTS Corporation of Elkhart, Indiana made and sold modular electronic pedal position sensors that were (a) specifically designed to be mounted on the pivot of an accelerator pedal, and (b) specifically intended and marketed for use to actuate electronic throttle controls in vehicles, as exemplified by the "position sensor and switch assembly 17" disclosed in U.S. Patent No. 5,385,068 filed December 18, 1992 ("'068 Patent").

13. For accelerator pedals designed to actuate ETC-equipped engines in vehicles sold in the United States prior to November 20, 1996 and January 26, 1998, it was standard and preferred for electronic position sensors, such as potentiometers, to be mounted adjacent to the pivot of such a vehicle's accelerator pedal. This was done so as to enable the accelerator pedal pivot to double as, or to be coupled to, a shaft rotating inside the sensor. Additionally, being located inside a vehicle's passenger compartment, position sensors mounted adjacent to an accelerator pedal do not need to withstand the harsher operating environment existing under a vehicle's hood.

14. I am familiar with the GMC and Chevrolet C/K pick-up truck line that GM manufactured and sold in the United States during the 1994 model year which began in late 1993. Depending on which engine a customer ordered,

Appendix F

1994 Chevrolet C/K pick-up trucks came equipped with either an electronic or a cable-actuated throttle controls. Different types of accelerator pedals were used to actuate the two types of throttle controls.

15. Annexed hereto as Exhibit 8 is a true copy of a GM engineering drawing dated February 9, 1993. Exhibit 8 depicts the design of the accelerator pedal that came installed in 1994 model Chevrolet C/K pick-up trucks equipped with optional diesel engines. The fuel systems in those vehicles were managed by an electronic throttle control.

16. As can be seen in Exhibit 8, the accelerator pedal assembly installed in certain 1994 Chevrolet C/K pick-up trucks (the "1994 GM ETC Pedal") included an electronic position sensor mounted on the pedal's support bracket, adjacent to the pedal and engaged with the pivot shaft about which the pedal rotated in operation. In the 1994 GM ETC Pedal, depression of the accelerator pedal causes a pivot shaft to rotate inside the position sensor engaged with the pedal's pivot shaft. Rotation of the pivot shaft produces electronic signal outputs that vary with the pedal's operating position and can be "read" and acted on by a microprocessor in an electronic throttle control.

17. The position sensor in the 1994 GM ETC Pedal was called a "503 Series" sensor manufactured by CTS Corporation of Elkhart, Indiana ("CTS"). CTS 503 Series position sensors have been offered for sale in the United States continuously since at least 1993.

Appendix F

18. Annexed hereto as Exhibit 9 are true copies of CTS drawings dated April 5, 1994, and November 14, 1995, referring to CTS 503 Series pedal position sensors. Submitted with this declaration is a physical specimen of a CTS 503 Series pedal position sensor.

19. Annexed hereto as Exhibit 10 are photographs of a GM ETC Pedal with a CTS 503 Series position sensor of the type installed in 1994 and more recent models of Chevrolet pick-up trucks. As shown in Exhibit 10, CTS 503 Series sensors are modular, completely enclosed units with openings designed to fit over and engage a vehicle pedal's pivot shaft. This modular design enables CTS 503 Series position sensors to be installed on different makes and models of vehicle accelerator pedal assemblies.

20. As of November 20, 1996 and January 26, 1998, I was personally familiar with the education and work experience levels held by (a) a number of individuals reporting to me who were engaged in the design of automotive accelerator pedals, and (b) various individuals holding similar occupations with KSR competitors. As of both November 20, 1996 and January 26, 1998, a person having average or "ordinary" skill in the field of automotive pedal design would have had a minimum of two (2) years of college level training in mechanical engineering and 2-3 years' work experience spanning at least one complete pedal design "cycle".

21. CTS provides specifications identifying minimum requirements (for example, minimum surface requirements for attachment points) that any person of ordinary skill in

the pedal design art could follow and use to design a pedal assembly that would accommodate a CTS 503 Series sensor. As of both November 20, 1996 and January 26, 1998, attaching a position sensor to a vehicle's accelerator pedal pivot shaft was a standard technique used to enable accelerator pedals to communicate with and actuate electronic throttle controls.

22. As of November 20, 1996 and January 26, 1998, whether a vehicle pedal assembly actuated a cable, or an electronic position sensor, was dependent on the type of fuel system the pedal was being designed to actuate. As of both November 20, 1996 and January 26, 1998, it was a matter of mere choice, among known alternatives, whether a vehicle's engine incorporated a cable-actuated or an electronic throttle control. That choice, made by vehicle manufacturers, determined whether an accelerator pedal was or was not coupled to an electronic pedal position sensor.

23. As of and prior to November 20, 1996 and January 26, 1998, I was aware of electronic throttle control systems and the use of vehicle pedal position sensors to actuate such systems. The various Ford programs that I worked on between 1988 and 1996, described in paragraphs 5 - 6, above, involved vehicles whose engines utilized mechanical throttle controls. For example, the KSR-manufactured accelerator pedal developed for the 1995 Ford Windstar actuated a throttle cable, not because of any lack of familiarity on my or my staff's part with electronic throttle controls or pedal position sensors at the time, but simply because the fuel system installed in the 1995 Ford Windstar utilized a mechanical

throttle control and the manufacturer's pedal program accordingly specified a cable-actuated throttle.

24. In mid-1998, KSR was chosen by Ford to supply adjustable pedal systems for the Ford Crown Victoria, Mercury Grand Marquis, and Lincoln Town Car lines commencing with the 2001 model year. The Ford engines installed in these vehicles utilized cable-actuated throttle controls, and the KSR-supplied accelerator pedals accordingly included cable-attachment arms rather than electronic pedal position sensors. Neither Teleflex Incorporated ("Teleflex") nor Technology Holding Company ("THC") has ever alleged that any pedal systems supplied to Ford for the 2001, 2002, or 2003 model Crown Victoria, Grand Marquis, or Lincoln Town Car programs incorporate or use any patented inventions allegedly owned by Teleflex or THC. KSR was awarded U.S. Patent No. 6,151,986 for the design of the adjustable pedal system supplied to Ford commencing with the 2001 model year.

25. In mid-2000, KSR was chosen by GM to supply adjustable pedal systems for the Chevrolet light pick-up truck and GMC full size sport utility vehicle lines commencing with the 2003 model year. The GM engines installed in these vehicles utilized electronic throttle controls, and the KSR-supplied accelerator pedals accordingly included off-the-shelf CTS 503 Series electronic pedal position sensors — the same type and brand of sensors as had been utilized in 1994 and later models of Chevrolet and GMC pick-up trucks equipped with optional diesel engines as described in greater detail

below. KSR has patents pending on the design of the adjustable pedal system supplied to GM commencing with the 2003 model year.

26. Annexed hereto as Exhibit 2 is a true copy of a letter dated March 28, 2001, from Teleflex to KSR which states in part:

> We understand that you have made several proposals to General Motors Corporation based on an adjustable pedal product in combination with an electronic throttle control. . . . Teleflex believes that any supplier of a product that combines an adjustable pedal with an electronic throttle control necessarily employs technology covered by one or more of the above Teleflex patents and applications.

27. Annexed hereto as Exhibit 3 is a claim chart comparing (a) the words of claim 1 of U.S. Patent No. 6,305,239 B1 ("'239 Patent"), and (b) the 1975 Pontiac Grand Ville adjustable pedal assembly depicted in Exhibit 1 hereto. The descriptions in Exhibit 3 of the 1975 Pontiac Grand Ville adjustable pedal assembly are true and accurate.

28. Annexed hereto as Exhibit 4 are claim charts comparing (a) the words of claims 1 and 2 of U.S. Patent No. 6,374,695 B1 ("'695 Patent"), and (b) the 1975 Pontiac Grand Ville adjustable pedal assembly depicted in Exhibit 1 hereto. The descriptions in Exhibit 4 of the 1975 Pontiac Grand Ville adjustable pedal assembly are true and accurate.

Appendix F

29. Annexed hereto as Exhibit 5 is a true copy of a figure from French Patent Application No. 2,739,947 to Urset and others published April 18, 1997 ("Urset"). This patent application discloses an adjustable pedal assembly designed to actuate a vehicle whose engine incorporates an electronic throttle control. The annexed figure from Urset depicts an accelerator pedal (34) and an electronic potentiometer (98) that modulates an electric signal as a function of the angular position of the accelerator pedal about its pivot axis A4.

30. Annexed hereto as Exhibit 6 is a claim chart comparing (a) the words of claim 1 of U.S. Patent No. 6,305,239 B1 ("'239 Patent"), and (b) excerpts from the English translation of Urset being submitted with the accompanying Declaration of James W. Dabney, Esq. (the "Urset Translation").

31. Annexed hereto as Exhibit 7 is a claim chart comparing (a) the words of claims 1 and 2 of U.S. Patent No. 6,374,695 B1 ("'695 Patent"), and (b) excerpts from the Urset Translation.

32. Annexed hereto as Exhibit 11 is a claim chart comparing (a) the words of claim 4 of U.S. Patent No. 6,237,565 B1 ("'565 Patent"), (b) excerpts from U.S. Patent No. 5,722,302 to Rixon, filed October 2, 1996 ("Rixon '302), and (c) the 1994 GM ETC Pedal depicted in Exhibits 8 and 10 hereto and embodied in 1994 and subsequent models of GMC and Chevrolet C/K pick-up trucks sold in the United States. The descriptions of the 1994 GM ETC Pedal in Exhibit 11 are true and accurate.

Appendix F

33. The adjustable pedal assembly disclosed in the Rixon '302 Patent is pivotally supported by a mounting bracket (77), just as the 1994 GM ETC Pedal is. Conventional, off-the-shelf pedal position sensors that were on sale in the United States as of November 20, 1996 and January 26, 1998, including CTS 503 Series pedal position sensors, could have been fitted to the pivot at the mounting bracket (77) disclosed in Figure 6 of the Rixon '302 Patent without materially altering the Rixon '302 Patent pedal, in exactly the same way as the position sensor incorporated in the 1994 GM ETC Pedal is attached to the pivot shaft and support bracket in that pedal assembly.

34. As of November 20, 1996 and January 26, 1998, there were a number of specific motivations to combine (a) the CTS 503 Series position sensor of the 1994 GM ETC Pedal, and (b) the adjustable pedal assembly disclosed in the Rixon '302 Patent. As of both November 20, 1996 and January 26, 1998, an increasing number of vehicles sold in the United States came equipped with electronic throttle control systems because such systems offered various operational advantages over cable-actuated throttle control systems as described in paragraph 9, above. In order to function in a vehicle whose engine incorporated an electronic throttle control, the adjustable pedal assembly disclosed in the Rixon '302 Patent would have had to be coupled to an electronic pedal position sensor.

35. Annexed hereto as Exhibit 12 is a chart comparing (a) the words of claim 4 of U.S. Patent No. 6,237,565 B1 ("'565 Patent"), (b) excerpts from U.S. Patent No. 5,010,782 to Asano, filed July 28, 1989 ("Asano '782 Patent"), and (c)

the 1994 GM ETC Pedal depicted in Exhibits 8 and 10 hereto and embodied in 1994 and subsequent models of Chevrolet C/K pick-up trucks sold in the United States. The descriptions of the 1994 GM ETC Pedal in Exhibit 12 are true and accurate.

36. The adjustable pedal assembly disclosed in the Asano '782 Patent is supported by a pivot shaft (54), just as the 1994 GM ETC Pedal is. Conventional, off-the-shelf pedal position sensors that were on sale in the United States as of November 20, 1996 and January 26, 1998, including CTS 503 Series pedal position sensors, could have been fitted to the pivot (54) and support bracket (50) disclosed in Figure 5 of the Asano '782 Patent without materially altering the '782 Patent pedal, in exactly the same way as the position sensor incorporated in the 1994 GM ETC Pedal is attached to the pivot shaft and support bracket in that pedal assembly.

37. As of November 20, 1996 and January 26, 1998, the same motivations as existed for combining the Rixon '302 Patent and the CTS 503 Series position sensor of the 1994 GM ETC Pedal, described above, existed co-equally for combining that sensor with the Asano '782 Patent pedal. Prior to November 20, 1996 and January 26, 1998, a CTS 503 Series pedal position sensor could have been mounted adjacent to the pedal and pivot of the Asano '782 Patent without materially altering the Asano '782 Patent pedal.

38. Annexed hereto as Exhibit 13 is a chart comparing (a) the words of Claim 1 of U.S. Patent No. 6,305,239B1 ("'239 Patent"), (b) the disclosure of U.S. Patent No. 2,860,720 to Huff, filed Jan. 18, 1956 ("Huff '720 Patent"),

and (c) the 1994 GM ETC Pedal. The descriptions of the 1994 GM ETC Pedal included in Exhibit 13 are true and accurate.

39. As of November 20, 1996 and January 26, 1998, the same motivations as existed for combining the Rixon '302 or Asano '782 Patent, and the CTS 503 Series position sensor of the 1994 GM ETC Pedal, described above, existed co-equally for combining that sensor with the Huff '720 Patent pedal. Prior to November 20, 1996 and January 26, 1998, a CTS 503 Series pedal position sensor could have been mounted adjacent to the pedal and pivot of the Huff '720 Patent without materially altering the Huff '720 Patent pedal.

40. Annexed hereto as Exhibit 14 is a chart comparing (a) words of Claims 1 and 2 of U.S. Patent No. 6,374,695 B1 ("'695 Patent"), (b) excerpts from the Huff '720 Patent, and (c) the 1994 GM ETC Pedal. The descriptions of the 1994 GM ETC Pedal contained in Exhibit 14 are true and accurate.

41. At my request and direction, Dr. Daniel H. Kruger of Ames, Iowa, has prepared computer animations presenting the contents of the claim charts annexed hereto as Exhibits 3, 4, 6, 7, 11-14. In my opinion, the animations resident on Exhibit 1 to the accompanying Declaration of Daniel H. Kruger present fairly and accurately how the pedal position sensor of the 1994 GM ETC Pedal could be attached to either the Rixon '302 Patent pedal assembly, the Asano '782 Patent pedal assembly, or the Huff '720 Patent pedal assembly without materially altering any one of these assemblies.

Appendix F

42. I am not aware of any need expressed by any vehicle manufacturer on or prior to November 20, 1996, for any position adjustable pedal assembly comprising an electronic pedal position sensor. I also am not aware of any person who attempted and failed to meet any need existing prior to November 20, 1996, for any position adjustable pedal assembly incorporating an electronic pedal position sensor.

43. Annexed hereto as Exhibits 15 and 16 are patent documents describing designs of KSR-manufactured adjustable pedal assemblies that Teleflex has accused of infringing one or more of the '565 Patent, the '239 Patent, or the '695 Patent (the "Accused Products"). The designs of the Accused Products differ in fundamental ways from any design described in any of the patents that Teleflex has asserted against KSR.

44. I am unaware of any connection between any (a) commercial success that the Accused Products, or any other position adjustable pedal products, have enjoyed, and (b) the mere fact that any such products may incorporate off-the-shelf electronic pedal position sensors.

45. Although I cannot speak for KSR's customers, I believe that the basis of automakers' demand for KSR-manufactured vehicle pedal assemblies stems from quality, innovation, price, performance, and service advantages that KSR offers relative to other manufacturers.

Appendix F

I, LARRY WILLEMSEN, hereby declare under penalty of perjury under the laws of the United States that the foregoing is true and correct.

Dated: July 7, 2003

_____

Larry Willemsen

Appendix F

Exhibit	Supplemental Joint Appendix page
1	58
2	62
8	63
9	64
10	68
12	72
16	74

APPENDIX G — DECLARATION OF DANIEL H. KRUGER DATED JULY 5, 2003 AND FILED JULY 7, 2003

UNITED STATES DISTRICT COURT
EASTERN DISTRICT OF MICHIGAN
SOUTHERN DIVISION

Case No: 02-74586

TELEFLEX INCORPORATED,

Plaintiff,

vs.

KSR INTERNATIONAL CO.,

Defendant.

RODGER C. YOUNG (P22652)
STEVEN SUSSER (P52940)
DAVID J. POIRIER (P62928)
Young & Susser, P.C.
Attorneys for Plaintiff
26200 American Drive, Suite 305
Southfield, Michigan 48034
(248) 353-8620

KENNETH J. MCINTYRE (P17450)
L. PAUL ZINN (P57516)
Dickinson Wright PLLC
Attorneys for Defendant
500 Woodward Avenue, Suite 4000
Detroit, Michigan 48226-3425
(313) 223-3500

Appendix G

JAMES W. DABNEY
Pennie & Edmonds LLP
Attorneys for Defendant
1155 Avenue of the Americas
New York, New York 10036
(212) 790-9090

DECLARATION OF DANIEL H. KRUGER

1. My name is Daniel H. Kruger. My business address is Demonstratives, Inc., 2321 North Loop Drive, Ames, Iowa 50010 ("DI"). I was awarded a Ph.D. in Aerospace Engineering and Engineering Mechanics from Iowa State University in 1995. I was awarded an M.S. Degree in Aerospace Engineering and Engineering Mechanics from Iowa State University in 1992. I was awarded a B.S. degree in Physics and Mathematics from Morningside College in 1989. My undergraduate and graduate education in Engineering Mechanics included training in the reading of two-dimensional engineering drawings, such as patent drawings, and in the use of computer-aided design ("CAD") technology to create three-dimensional representations of objects depicted in two-dimensional engineering drawings. I have personal knowledge of the matters stated in this declaration.

2. Annexed hereto as Exhibit 1 is a compact disk containing twelve computer files entitled:

1. Asano_565_claim._4.mpeg

Appendix G

2. Huff_239_claim_1.mpeg
3. Huff_695_claim_1.mpeg
4. Huff_695_claim_2.mpeg

5. Pontiac_239_claim_1.mpeg
6. Pontiac_695_claim_1.mpeg
7. Pontiac_695_claim_2.mpeg

8. Rixon_565_claim_4.mpeg
9. Rixon_Engelgau_565_claim_4_compare.mpeg

10. Urset_239_claim_1.mpeg
11. Urset_695_claim_1.mpeg
12. Urset_695_claim_2.mpeg

3. I personally supervised the creation of the contents of each of the computer files contained on Exhibit 1 using proprietary computer software tools developed by DI.

4. In creating the file on Exhibit I entitled "Asano_565_claim_4.mpeg," I studied the following documents: (a) U.S. Patent No. 5,010,782 to Asano ("Asano"); (b) a General Motors Corporation ("GM") drawing dated February 9, 1993, for Part No. 15974034 entitled "Pedal Assembly-Accelerator" and referring to "1994 C/K" (the "1994 GM Drawing"); and (c) U.S. Patent No. 6,237,565 B1 (the '565 Patent").

5. The file on Exhibit 1 entitled "Asano_565_claim_4.mpeg" includes true and accurate representations of (a) the position adjustable pedal assembly depicted in Figure 5 of Asano (the "Asano Pedal"); and (b) the pedal assembly depicted in the 1994 GM Drawing (the "1994 GM ETC

Pedal"). The trueness and accuracy of the images of the Asano Pedal and the 1994 GM ETC Pedal depicted in Exhibit 1 can best be seen by comparing those images to Asano Figure 5 and the 1994 GM Drawing.

6. The file on Exhibit 1 entitled "Asano_565_claim_4.mpeg," further includes demonstrative illustrations of the following: (c) how the modular position sensor attached to the support of the 1994 GM ETC Pedal could be similarly attached to the support of the Asano Pedal; (d) how, if a position sensor were attached to the support of the Asano Pedal, the sensor would provide a signal that corresponded to pedal's arm position as it pivoted about its axis between rest and applied positions; (e) how the position of the pivot supporting the Asano Pedal remains constant while the Asano Pedal arm moves in fore and aft directions with respect to the pivot; and (f) how the words of Claim 4 of the '565 Patent, read literally, may correspond to structures disclosed in Asano and the 1994 GM ETC Pedal.

7. In creating the file on Exhibit 1 entitled "Huff_239_claim_1.mpeg," I studied the following documents: (a) U.S. Patent No. 2,860,720 to Huff ("Huff"); (b) the 1994 GM Drawing; and (c) U.S. Patent No. 6,305,239 B1 (the "'239 Patent").

8. The file on Exhibit 1 entitled "Huff_ 239_claim_1.mpeg" includes true and accurate representations of (a) the position adjustable pedal assembly depicted in Figure 2 of Huff (the "Huff Pedal"); and (b) the 1994 GM ETC Pedal. The trueness and accuracy of the images of the Huff Pedal and the 1994 GM ETC Pedal depicted in Exhibit 1 can best

be seen by comparing those images to Huff and the 1994 GM Drawing.

9. The file on Exhibit 1 entitled "Huff_239_claim_1.mpeg" further includes demonstrative illustrations of the following: (c) how the modular position sensor mounted adjacent to the 1994 GM ETC Pedal could be similarly mounted adjacent to the support of the Huff Pedal; (d) how a position sensor, if mounted adjacent to the Huff Pedal, would emit an electric signal that varied with the position of the pedal about its pivot axis; (e) how the signal output of a position sensor so mounted would vary independently of the pedal's movement between different operable positions; and (f) how the words of Claim 1 of the '239 Patent, read literally, may correspond to structures disclosed in Huff and the 1994 GM Pedal.

10. In supervising the creation of the file on Exhibit 1 entitled "Huff_695_ claim_1.mpeg," I studied the following documents: (a) Huff; (b) the 1994 GM Drawing; and (c) U.S. Patent No. 6,374,695 B1 (the "'695 Patent").

11. The file on Exhibit 1 entitled "Huff_695_claim_1.mpeg" includes true and accurate representations of (a) the position adjustable pedal assembly depicted in Figure 2 of Huff (the "Huff Pedal"); and (b) the 1994 GM ETC Pedal. The trueness and accuracy of the images of the Huff Pedal and the 1994 GM ETC Pedal depicted in Exhibit 1 can best be seen by comparing those images to Huff and the 1994 GM Drawing.

Appendix G

12. The file on Exhibit 1 entitled "Huff_695_claim_1_.mpeg" further includes demonstrative illustrations of the following: (c) how the modular position sensor mounted adjacent to the 1994 GM ETC Pedal could be similarly mounted adjacent to the support of the Huff Pedal; (d) how a position sensor, if mounted adjacent to the Huff Pedal, would emit an electric signal in response to movement of the pedal about its pivot axis; (e) how the signal output of a position sensor so mounted would respond to the pedal's pivotal movement in any of its adjusted positions; and (f) how the words of Claim 1 of the '695 Patent, read literally, may correspond to structures disclosed in Huff and the 1994 GM Pedal.

13. In supervising the creation of the file on Exhibit 1 entitled "Huff_695_claim_2.mpeg," I studied the following documents: (a) Huff; (b) the 1994 GM Drawing; and (c) U.S. Patent No. 6,374,695B1 (the "'695 Patent").

14. The file on Exhibit 1 entitled "Huff_695_claim_2.mpeg" includes true and accurate representations of (a) the position adjustable pedal assembly depicted in Figure 2 of Huff (the "Huff Pedal"); and (b) the 1994 GM ETC Pedal. The trueness and accuracy of the images of the Huff Pedal and the 1994 GM ETC Pedal depicted in Exhibit 1 can best be seen by comparing those images to Huff and the 1994 GM Drawing.

15. The file on Exhibit 1 entitled "Huff_695_claim_2.mpeg" further includes demonstrative illustrations of the following: (c) how the modular position sensor mounted adjacent to the 1994 GM ETC Pedal could be similarly

mounted adjacent to the support of the Huff Pedal; (d) how a position sensor, if mounted adjacent to the Huff Pedal, would emit an electric signal in reaction to pivotal movement of the pedal about its pivot axis; (e) how the signal output of a position sensor so mounted would respond to the pedal's pivotal movement in any of its adjusted positions; and (f) how the words of Claim 2 of the '695 Patent, read literally, may correspond to structures disclosed in Huff and the 1994 GM Pedal.

16. In creating the file on Exhibit 1 entitled "Pontiac_239_claim_1.mpeg," I studied the following documents: (a) excerpts from a service manual for the 1974 Pontiac Grand Ville; (b) photographs of an adjustable pedal assembly installed in an actual 1975 Pontiac Grand Ville; and (c) U.S. Patent No. 6,305,239 B1 (the "'239 Patent").

17. The file on Exhibit 1 entitled "Pontiac_239_claim_1.mpeg" includes true and accurate representations of an adjustable pedal assembly installed in an actual 1975 Pontiac Grand Ville. The trueness and accuracy of the images of the 1975 Pontiac Grand Ville pedal assembly depicted in Exhibit 1 can best be seen by comparing those images to the photographs of the 1975 Pontiac Grand Ville being submitted with the accompanying Declaration of Larry Willemsen.

18. The file on Exhibit 1 entitled "Pontiac_239_claim_1.mpeg" further includes demonstrative illustrations of the following: (a) how an electronic sensor mounted adjacent to the 1975 Pontiac Grand Ville accelerator pedal emits an electric signal that varies with the position of the pedal about its pivot axis; (b) how the signal output of the

disclosed electronic sensor varies independently of the pedal's movement between different operable positions; and (c) how the words of Claim 1 of the '239 Patent, read literally, may correspond to the structures disclosed in the 1975 Pontiac Grand Ville adjustable pedal assembly.

19. In creating the file on Exhibit 1, entitled "Pontiac_695_claim_1.mpeg," I studied the following documents: (a) excerpts from a service manual for the 1974 Pontiac Grand Ville; (b) photographs of an adjustable pedal assembly installed in an actual 1975 Pontiac Grand Ville; and (c) U.S. Patent No. 6,374,695 B1 (the "'695 Patent").

20. The file on Exhibit 1 entitled "Pontiac_695_claim_1.mpeg" includes true and accurate representations of an adjustable pedal assembly installed in an actual 1975 Pontiac Grand Ville. The trueness and accuracy of the images of the 1975 Pontiac Grand Ville pedal assembly depicted in Exhibit 1 can best be seen by comparing those images to the photographs of an actual 1975 Pontiac Grand Ville being submitted with the accompanying Declaration of Larry Willemsen.

21. The file on Exhibit 1 entitled "Pontiac_695_claim_1.mpeg" further includes demonstrative illustrations of the following: (a) how an electronic sensor mounted adjacent to the 1975 Pontiac Grand Ville accelerator pedal emits an electric signal in response to pivotal movement of the pedal about its pivot axis; (b) how the disclosed electronic sensor responds to the accelerator pedal's pivotal movement in any of the pedal's adjusted positions; and (c) how the words of Claim 1 of the '695 Patent, read literally, may correspond

to the structures disclosed in the 1975 Pontiac Grand Ville adjustable pedal assembly.

22. In creating the file on Exhibit 1, entitled "Pontiac_695_claim_2.mpeg," I studied the following documents: (a) excerpts from a service manual for the 1974 Pontiac Grand Ville; (b) photographs of an adjustable pedal assembly installed in an actual 1975 Pontiac Grand Ville; and (c) U.S. Patent No. 6,374,695 B1 (the "'695 Patent").

23. The file on Exhibit 1 entitled "Pontiac_695_claim 2.mpeg" includes true and accurate representations of an adjustable pedal assembly installed in a 1975 Pontiac Grand Ville. The trueness and accuracy of the images of the 1975 Pontiac Grand Ville pedal assembly depicted in Exhibit 1 can best be seen by comparing those images to the photographs of an actual 1975 Pontiac Grand Ville being submitted with the accompanying Declaration of Larry Willemsen.

24. The file on Exhibit 1 entitled "Pontiac_695_claim_2.mpeg" further includes demonstrative illustrations of the following: (a) how an electronic sensor mounted adjacent to the 1975 Pontiac Grand Ville accelerator pedal emits an electric signal in reaction to pivotal movement of the pedal about its pivot axis; (b) how the disclosed electronic sensor responds to the pedal's pivotal movement in any of its adjusted positions; and (c) how the words of Claim 2 of the '695 Patent, read literally, may correspond to structures disclosed in the 1975 Pontiac Grand Ville adjustable pedal assembly.

Appendix G

25. In creating the file on Exhibit 1 entitled "Rixon_565_claim_4.mpeg," I studied the following documents: (a) U.S. Patent No. 5,722,302 to Rixon ("Rixon"); (b) a General Motors Corporation ("GM") drawing dated February 9, 1993, for Part No. 15974034 entitled "Pedal Assembly-Accelerator" and referring to "1994 C/K" (the "1994 GM Drawing"); and (c) U.S. Patent No. 6,237,565 B1 (the "'565 Patent").

26. The file on Exhibit 1 entitled "Rixon 565_claim_4.mpeg" includes true and accurate representations of (a) the position adjustable pedal assembly depicted in Figure 6 of Rixon (the "Rixon Pedal"); and (b) the pedal assembly depicted in the 1994 GM Drawing (the "1994 GM ETC Pedal"). The trueness and accuracy of the images of the Rixon Pedal and the 1994 GM ETC Pedal depicted in Exhibit 1 can best be seen by comparing those images to Rixon Figure 6 and the 1994 GM Drawing.

27. The file on Exhibit 1 entitled "Rixon_565_claim_4.mpeg," further includes demonstrative illustrations of the following: (c) how the modular position sensor attached to the support of the 1994 GM ETC Pedal could be similarly attached to the support of the Rixon Pedal; (d) how, if a position sensor were attached to the support of the Rixon Pedal, the sensor would provide a signal that corresponded to pedal's arm position as it pivoted about its axis between rest and applied positions; (e) how the position of the pivot supporting the Rixon Pedal remains constant while the Rixon Pedal arm moves in fore and aft directions with respect to the pivot; and (f) how the words of Claim 4 of the '565 Patent, read literally, may correspond to structures disclosed in Rixon and the 1994 GM ETC Pedal.

Appendix G

28. In creating the file on Exhibit 1 entitled " Rixon_ Engelgau_565_claim_4_compare.mpeg," I studied the following documents: (a) U.S. Patent No. 5,722,302 to Rixon ("Rixon"); (b) a General Motors Corporation ("GM") drawing dated February 9, 1993, for Part No. 15974034 entitled "Pedal Assembly-Accelerator" and referring to "1994 CfK" (the "1994 GM Drawing"); and (c) U.S. Patent No. 6,237,565 B1 (the "'565 Patent").

29. The file on Exhibit 1 entitled "Rixon_Engelgau _565_ claim_4_compare.mpeg" includes true and accurate representations of (a) the position adjustable pedal assembly depicted in Figure 6 of Rixon (the "Rixon Pedal"); and (b) the position adjustable pedal assembly depicted in the '565 Patent (the "Engelgau Pedal"). The trueness and accuracy of the images of the Rixon Pedal and the Engelgau Pedal depicted in Exhibit 1 can best be seen by comparing those images to Rixon Figure 6 and the '565 Patent, respectively.

30. The file on Exhibit 1 entitled "Rixon_565_claim_ 4.mpeg," further includes demonstrative illustrations of the following: (c) how the modular position sensor attached to the support of the 1994 GM ETC Pedal could be similarly attached to the support of the Rixon Pedal, in substantially the same way as a position sensor is optionally attached to the Engelgau Pedal; (d) how, if a position sensor were attached to the support of the Rixon Pedal, the sensor would provide a signal that corresponded to pedal's arm position as it pivoted about its axis between rest and applied positions, in substantially the same way as it does in the embodiment of the Engelgau Pedal incorporating a position sensor, (e) how the position of the pivot supporting the Rixon Pedal

remains constant while the Rixon Pedal arm moves in fore and aft directions with respect to the pivot, in substantially the same way as it does on the Engelgau Pedal; and (f) how the words of Claim 4 of the '565 Patent, read literally, may correspond to structures disclosed in Rixon, the 1994 GM ETC Pedal, and the Engelgau Pedal.

31. In creating the file on Exhibit 1, entitled "Urset_239_claim_1.mpeg," I studied the following documents: (a) a translation of French Patent Application No. 2,739,947 to Urset ("Urset"); and (b) U.S. Patent No. 6,305,239 B1 (the '239 Patent").

32. The file on Exhibit 1 entitled "Urset_239_claim_1.mpeg" includes true and accurate representations of the adjustable pedal assembly depicted in Figs. 3 and 4 of Urset ("Urset Pedal"). The trueness and accuracy of the images of the Urset Pedal depicted in Exhibit 1 can best be seen by comparing those images to Figs. 3 & 4 of Urset.

33. The file on Exhibit 1 entitled "Urset_239_claim_1.mpeg" further includes demonstrative illustrations of the following: (a) how an electronic sensor mounted adjacent to the pedal of the Urset Pedal emits an electric signal that varies with the position of the pedal about its pivot axis; (b) how the signal output of the disclosed electronic sensor varies independently of the pedal's movement between different operable positions; and (c) how the words of Claim 1 of the '239 Patent, read literally, may correspond to structures disclosed in the Urset Pedal.

Appendix G

34. In creating the file on Exhibit 1, entitled "Urset_695_claim_1.mpeg," I studied the following documents: (a) French Patent Application No. 2,739,947 to Urset ("Urset"); and (b) U.S. Patent No. 6,374,695 B1 (the "'695 Patent").

35. The file on Exhibit 1 entitled "Urset_695_claim_1.mpeg" includes true and accurate representations of the adjustable pedal assembly depicted in Figs. 3 and 4 of Urset (the "Urset Pedal"). The trueness and accuracy of the images of the Urset Pedal depicted in Exhibit 1 can best be seen by comparing those images to Figs. 3 and 4 of Urset.

36. The file on Exhibit 1 entitled "Urset_695_claim_1.mpeg" further includes demonstrative illustrations of the following: (a) how an electronic sensor mounted adjacent to the Urset accelerator pedal emits an electric signal in response to pivotal movement of the pedal about its pivot axis; (b) how the disclosed electronic sensor responds to the pedal's pivotal movement in any of its adjusted positions; and (c) how the words of Claim 1 of the '695 Patent, read literally, may correspond to structures disclosed in Urset.

37. In creating the file on Exhibit 1, entitled "Urset_695_claim_2.mpeg," I studied the following documents: (a) French Patent Application No. 2,739,947 to Urset ("Urset"); and (b) U.S. Patent No. 6,374,695 B1 (the "'695 Patent").

38. The file on Exhibit 1 entitled "Urset_695_claim_2.mpeg" includes true and accurate representations of the adjustable pedal assembly depicted in Figs. 3 and 4 of Urset (the "Urset Pedal"). The trueness and accuracy of the images

of the Urset Pedal depicted in Exhibit 1 can best be seen by comparing those images to Figs. 3 and 4 of Urset.

39. The file on Exhibit 1 entitled "Urset_695_claim_1.mpeg" further includes demonstrative illustrations of the following: (a) how an electronic sensor mounted adjacent to the Urset accelerator pedal emits an electric signal in reaction to pivotal movement of the pedal about its pivot axis; (b) how the disclosed electronic sensor responds to the pedal's pivotal movement in any of its adjusted positions; and (c) how the words of Claim 2 of the '695 Patent, read literally, may correspond to structures disclosed in Urset.

I, DANIEL H. KRUGER, hereby declare under penalty of perjury that the foregoing is true and correct.

Dated: July 5, 2003

s/ Daniel H. Kruger
Daniel H. Kruger

Appendix G

Exhibit	Supplemental Joint Appendix page
1	82

APPENDIX H — DECLARATION OF JAMES W. DABNEY DATED JULY 6, 2003 AND FILED JULY 7, 2003

UNITED STATES DISTRICT COURT
EASTERN DISTRICT OF MICHIGAN
SOUTHERN DIVISION

Case No: 02-74586

TELEFLEX INCORPORATED,

Plaintiff,

vs.

KSR INTERNATIONAL CO.,

Defendant.

DECLARATION OF JAMES W. DABNEY

1. My name is James W. Dabney. I am a member of the Bar of the States of New York and New Jersey and of the firm of Pennie & Edmonds LLP, co-counsel for plaintiff KSR International Company ("KSR") in this action. I make this declaration in support of KSR's Motion for Summary Judgment of Invalidity.

2. Annexed hereto as Exhibit 1 is a certified copy of an Assignment of Patents dated September 27, 2002, and recorded in the United States Patent and Trademark Office on October 21, 2002.

3. Annexed hereto as Exhibit 2, less exhibits, is a copy of the Complaint filed March 12, 2003, in *KSR Int'l Co.* v. *Technology Holding Co.*, No. 03-277, currently pending in the United States District Court for the District of Delaware (the "Delaware Action").

4. Annexed hereto as Exhibit 3, less exhibits, is a true copy of the Answer and Affirmative and Other Defenses that non-party Technology Holding Company ("THC") served in the Delaware Action on April 2, 2003.

5. Annexed hereto as Exhibit 4, less exhibits, is the Opening Brief in Support of Plaintiff's Motion for Summary Judgment of Invalidity of the Patents-in-Suit that KSR filed April 16, 2003, in the Delaware Action. On April 28, 2003, proceedings in the Delaware Action were stayed pending the determination of KSR's motion filed April 2, 2003, to dismiss the within action for lack of subject matter jurisdiction in view of Teleflex's admitted non-ownership of any of the patents being asserted in this action.

6. Annexed hereto as Exhibit 5 are copies of Plaintiff's Response to Defendant's First Set of Interrogatories as served in this action dated April 29, 2003.

7. Annexed hereto as Exhibit 6 is a copy of published French Patent Application No. 2,739,947 to Urset ("Urset").

8. Annexed hereto as Exhibit 7 is a certified English translation of the Urset reference.

Appendix H

9. Annexed hereto as Exhibit 8 are excerpts from the file wrapper and contents of United States Application Serial No. 08/720,682 filed October 2, 1996, and assigned to Comfort Pedals Inc. This application matured into U.S. Patent No. 5,722,302.

10. Annexed hereto as Exhibit 9 are excerpts from the Annual Report on Form 10-K filed by Teleflex Incorporated with the Securities and Exchange Commission ("SEC") for the fiscal year ending December 28, 1997.

11. Annexed hereto as Exhibit 10 is a copy of Swedish Patent Application No. 9704288-1 filed November 21, 1997, and assigned to Claes Johansson Automotive AB of Dalstorp, Sweden (the "Swedish Priority Application").

12. Annexed hereto as Exhibit 11 is a certified English-language translation of the Swedish Priority Application.

13. Annexed hereto as Exhibit 12 are excerpts from the file wrapper and contents of United States Application Serial No. 09/174,748 filed October 19, 1998. This application matured into U.S. Patent No. 6,151,984.

14. Annexed hereto as Exhibit 13 are excerpts from the file wrapper and contents of United States Application Serial No. 09/655,159 filed September 5, 2000. This application matured in to U.S. Patent No. 6,305,239 B1.

15. Annexed hereto as Exhibit 14 are excerpts from the file wrapper and contents of United States Application

Serial No. 09/654,642 filed September 5, 2000. The application matured into U.S. Patent No. 6,374,695 B1.

16. Annexed hereto as Exhibit 15 are excerpts from the file wrapper and contents of United States Application Serial No. 09/236,975 filed January 26, 1999. This application matured into U.S. Patent No. 6,109,241.

17. Annexed hereto as Exhibit 16 are excerpts from the file wrapper and public contents of United States Application No. 09/643,422 filed August 22, 2000. This application matured into U.S. Patent No. 6,237,565 B1.

I, JAMES W. DABNEY, hereby declare under penalty of perjury under the laws of the United States that the foregoing is true and correct.

Dated: July 6, 2003

_____

James W. Dabney

Appendix H

Exhibit	Supplemental Joint Appendix page
5	100
15	117
16	128

APPENDIX I — TELEFLEX' S RESPONSE TO KSR'S MOTION FOR SUMMARY JUDGMENT OF INVALIDITY DATED AUGUST, 2003

UNITED STATES DISTRICT COURT
EASTERN DISTRICT OF MICHIGAN
SOUTHERN DIVISION

Case No. 02 74586

TELEFLEX INCORPORATED,

Plaintiff,

v.

KSR INTERNATIONAL CO.,

Defendant.

RODGER D. YOUNG (P22652)
STEVEN SUSSER (P52940)
Young & Susser, P.C.
Counsel for Plaintiff
26200 American Drive, Suite 305
Southfield, MI 48034
248.353.8620

JAMES W. DABNEY
Pennie & Edmonds, LLP
Counsel for Defendant
1155 Avenue of the Americas
New York, NY 10036
212.790.9090

Appendix I

KENNETH J. MCINTYRE (P17450)
Dickinson Wright, PLLC
Counsel for Defendant
500 Woodward Avenue
Suite 4000
Detroit, MI 48226
313.223.3500

TELEFLEX' S RESPONSE TO KSR' S MOTION FOR SUMMARY JUDGMENT OF INVALIDITY

SUBMITTED BY:

Rodger D. Young (P22652)
Steven Susser (P52940)
Kevin B. Hirsch (P58757)
Young & Susser, P.C.
26200 American Drive, Suite 305
Southfield, MI 48034
248.353.8620

I. INTRODUCTION

To succeed in its attempt to invalidate the Engelgau Patent, KSR must prove to the Court by clear and convincing evidence that, as a matter of law, it is invalid — despite the fact that the experts, the United States Patent and Trademark Office, have already affirmed its validity. To do so, KSR has attempted to demonstrate that the Engelgau Patent describes nothing more than an adjustable pedal with an attached electronic control and that it would have been obvious to combine these two features. But KSR's attempt fails because,

among other reasons, it has mischaracterized the Engelgau Patent as simply a combination of two known features. Actually, the Engelgau Patent represented a unique way to combine an adjustable pedal with an electronic control — until that point, many inventors had tried to combine these two elements but none had been able to do so in the way that Engelgau did. As a result, the United States Patent and Trademark Office bestowed on him a patent.

KSR's approach here highlights the true issue between the parties: Whether as a factual question, the Engelgau Patent would have been obvious at the time to one of ordinary skill in the art. This is a question that a jury should decide after the trial (currently scheduled to begin in December 2003). Teleflex respectfully suggests that in light of its dispositive motion on KSR's infringement of the Engelgau Patent, the only viable issues that remain in this case are whether the Engelgau Patent is valid and the amount of damages. Teleflex requests that the Court deny KSR's invalidity motion, grant Teleflex's infringement motion, and allow the jury to decide the issues of validity and, if appropriate, damages.

II. STATEMENT OF FACTS

Teleflex is a leading manufacturer and supplier of adjustable pedal systems that are used by the automotive industry in automobile platforms. Adjustable pedals allow drivers to move the pedals closer to their feet, enabling them to attain maximum comfort while still sitting as far back from the steering wheel as possible to prevent air bag related injuries.

Appendix I

Some of the Teleflex adjustable pedal systems include an electronic control. An electronic control is a device that senses the depression and release of the pedal and produces an electronic signal corresponding to this movement. Adjustable pedal systems with electronic controls send the electronic signals to the engine to register the pressure applied by the driver on the accelerator, clutch, and/or brake. These adjustable pedal systems are designed to offer enhanced vehicle performance and better control than the traditional pedal system utilizing a cable or rod mechanism. The manufacture and supply of adjustable pedal systems with electronic controls is an expanding and profitable product market.

KSR is also an automotive industry supplier and a Teleflex competitor. KSR also manufactures and sells adjustable pedals that incorporate electronic controls. On its website, KSR claims that it is "an industry leader in the design, engineering and manufacturing of adjustable and fixed brake pedal modules [and] electronic throttle controls . . ." [*See, http://www.ksrint.com/about%20ksr.htm*] KSR's sales numbers support this claim; KSR's "[a]nnual brake pedal production for adjustable and fixed units exceeds 310 million components assembled into over 14 million modules." [*See, http://www.ksrint.com/english.htm*] A significant portion of these modules are the type of product at issue in this case — an adjustable pedal with an incorporated electronic control. Indeed, KSR's website touts its electronic throttle control as a "companion to the patented KSR adjustable pedal technology." [*See, http://www.ksrint.com/electronic%20throttle%20controls.htm*]

Appendix 1

In its Second Amended Complaint, Teleflex alleged that certain KSR adjustable pedals with an incorporated electronic control infringe three Teleflex patents: United States Patent No. 6,237,565, invented by Steven Engelgau ("the Engelgau Patent"); United States Patent No. 6,374,695 ("the '695 Patent") and United States Patent No. 6,305,239 ("the '239 Patent") (together the '695 Patent and the '235 Patent will be referenced as "the Johansson Patents").

The Engelgau Patent claims an adjustable pedal that allows a driver to move the pedal closer to or farther from the driver to achieve maximum driving comfort. It also describes and claims an electronic control that replaces the traditional cable linkage between the pedal and the corresponding part of the vehicle. In the Engelgau Patent, the electronic control module is attached to the mounting bracket of the adjustable pedal and, consequently, it remains fixed both when the pedal arm moves during adjustment and when the pedal arm moves operationally. [*See,* **Ex. A**, ¶5.]

The Johansson Patents also describe and claim an adjustable pedal that incorporates an electronic control. The Johansson Patents, however, describe and claim a different design than that described in the Engelgau Patent. Specifically, in the Johansson Patents, the electronic control moves with the pedal during adjustment — that is, the pedal arm itself moves about one pivot point, and the pedal assembly as a whole moves about a second pivot point.

Appendix I

III. PROCEDURAL HISTORY

On November 18, 2002, Teleflex filed this action against KSR for infringement of the Engelgau Patent and the Johansson Patents. On March 13, 2003, KSR filed a declaratory judgment action in Delaware against Technology Holding, a wholly owned subsidiary of Teleflex, claiming that KSR does not infringe the Engelgau and Johansson Patents and, if it does, that those patents are invalid. The Delaware action is the mirror image of the Michigan action. In it, KSR maintained that Technology Holding, not Teleflex, was the proper party to allege infringement against KSR. On April 2, 2003, KSR filed a Motion to Dismiss for Lack of Subject Matter Jurisdiction in this Court. This Court recently denied KSR's Motion to Dismiss as it relates to the Engelgau Patent. The Delaware action has been stayed pending this Court's jurisdictional ruling.[1]

On July 7, 2003, Teleflex filed two Motions for Summary Judgment of Infringement, one relating to the Engelgau Patent and the other relating to the Johansson Patents. On the same day, KSR filed its Motion for Summary Judgment of Invalidity, requesting that the Court declare the Engelgau and Johansson Patents invalid.

---

1. The simple solution to KSR's concerns regarding jurisdiction would be to have Teleflex amend its Complaint to join Technology Holding as a Plaintiff. In doing so, neither the substance nor timing of this case would change, given that Technology Holding is merely a holding company and does not manufacture, make, or use any parts or patents. For a more detailed discussion of the jurisdictional issue, Teleflex refers the Court to its Response to KSR's Motion to Dismiss for Lack of Subject Matter Jurisdiction.

Appendix I

The parties recently stipulated to the dismissal with prejudice of the Johansson Patents, which Teleflex has decided to dedicate to the public under 35 U.S.C. § 253. Because of the dismissal of the Johansson Patents, the single remaining claim in this case relates to KSR's infringement of the Engelgau Patent. Based on this recent development, Teleflex's Motion for Summary Judgment of Infringement of Johansson Patents and KSR' s arguments relating to the validity of the Johansson Patents are moot. Therefore, in this Response Brief, Teleflex intends to address only KSR's validity arguments regarding the Engelgau Patent. Teleflex will explain in this Response why the adjustable pedal patents and products that KSR cites as prior art do not render the Engelgau Patent obvious. Indeed, this prior art demonstrates why the United States Patent and Trademark Office was correct in deciding to award a patent for the Engelgau invention.

IV. APPLICABLE LAW

A. Burden of Proof

Importantly, on the issue of validity, KSR bears the burden of proof. 35 U.S.C. § 282. This burden of proof is not the standard "preponderance of the evidence" burden; rather, KSR must prove invalidity by clear and convincing evidence. *Elmer v. ICC Fabricating, Inc.*, 67 F.3d 1571, 1574 (Fed. Cir. 1995).[2] KSR must meet this burden because once

---

2. The Court of Appeals for the Federal Circuit maintains exclusive appellate jurisdiction over civil suits that arise under the federal patent laws. *See*, J. Thomas McCarthy, *McCarthy's Desk Encycloedia of Intellectual Property*, Second Edition, p. 104.

a patent has been granted, it is presumed to be valid, primarily because the United States Patent and Trademark Office subjects a patent application to rigorous scrutiny; the presumption of validity requires that the decision-maker employ an approach "that starts with the acceptance of the patent claimed as valid and that looks to the challenger for proof to the contrary." *Stratoflex, Inc. v. Aeroquip Corp.*, 713 F.2d 1530, 1534 (1983).[3]

Moreover, a party that asserts invalidity "not only has the procedural burden of proceeding first in establishing *a prima facie* case, but the burden of persuasion on the merits remains with that party until a final decision." *Stratoflex*, 713 F.2d at 1534 (emphasis added). According to the United States Supreme Court, in order to demonstrate a proposition by clear and convincing evidence, the party carrying the burden must "place in the mind of the ultimate fact finder an **abiding conviction** that the truth of its factual contentions are 'highly probable.'" *Colorado v. New Mexico*, 467 U.S. 310, 316, *reh'g denied*, 468 U.S. 1224 (1994), *quoting C.* McCormick, Law of Evidence 320, p. 679 (1954) (emphasis

---

3. See, *SIBIA Neurosciences, Inc. v. Cadus Pharmaceutical Corp.*, 225 F.3d 1349, 1355 (Fed. Cir. 2000); *Robotic Vision Systems, Inc. v. View Engineering, Inc.*, 189 F.3d 1370, 1377 (Fed. Cir. 1999) ("There is a strong presumption of validity for issued patents . . . therefore an accused infringer who raises patent invalidity as a defense bears the burden of showing invalidity by facts supported by clear and convincing evidence."); *Avia Group, Int'l, Inc. v. L.A. Gear California, Inc.*, 853 F.2d 1557, 1567 (Fed. Cir. 1998) (granting motion for summary judgment of non-obviousness).

added). Thus, for purposes of its motion for summary depicted in the Engelgau Patent would have been obvious to one of ordinary skill in the art — despite the fact that the United States Patent and Trademark Office found the patent to be valid.

B. Obviousness

1. Test for Obviousness

In order to prove that a patent claim is invalid as obvious, a party must demonstrate that the differences between the claimed invention as a whole and the prior art "are such that the subject matter as a whole would have been obvious at the time the invention was made to a person having ordinary skill in the art." 35 U.S.C. § 103.[4] An obviousness inquiry is highly fact specific, and requires an examination of the following: (1) the scope and content of the prior art; (2) the differences between the patented invention and what already existed in the prior art; (3) the ordinary level of skill of people working in the field; and (4) other objective evidence which may suggest that the invention would not have been obvious. *Graham v. John Deere Co.*, 383 U.S. 1, 17-18; 86 S. Ct. 684; 15 L. Ed.2d 545 (1966); *Ashland Oil, Co. v. Delta Resins & Refractories, Inc.*, 776 F.2d 281, 291 (Fed. Cir. 1985). The facts here argue against KSR's invalidity motion.

---

4. Prior art encompasses the existing body of technological information against which an invention is judged to determine if it is patentable as being a novel and nonobvious invention. See, J. Thomas McCarthy, *McCarthy's Desk Encyclopedia of Intellectual Property*, Second Edition, p. 341.

Appendix I

2. Combination of Elements within the Prior Art

An accused infringer who challenges a patent on obviousness grounds is essentially admitting that no one piece of prior art describes the invention; instead, the infringer is saying that if one were to choose certain aspects of prior art and then mix and match them, one would arrive at the patent-in-suit (here, the Engelgau Patent). Courts have traditionally been skeptical of this approach because, at some level, virtually all inventions are combinations of old elements.[5] Indeed, in hindsight, many inventions seem obvious. Therefore, courts have held that there must be some **suggestion** to combine specific prior art in such a way as to arrive at the particular combination disclosed in the patent at issue. *See, e.g., Yamanouchi Pharmaceutical Co.*, 231 F.3d at 1343 ("To counter this potential weakness in the obviousness construct, the suggestion to combine requirement stands as a critical safeguard against hindsight analysis and rote application of the legal test for obviousness."); *Heidelberger Druckmaschinen AG v. Hantscho Commercial Prods.*, 21 F.3d 1068, 1072 (Fed. Cir.

---

5. See, *Yamanouchi Pharmaceutical Co., Ltd. v. Danbury Pharmacal, Inc.*, 231 F.3d 1339, 1343 (Fed. Cir. 2000) *quoting In Re Rouffet*, 149 F.3d 1350, 1357-58 (Fed. Cir. 1998) ("If identification of each claimed element in the prior art were sufficient to negate patentability, very few patents would ever issue. Furthermore, rejecting patents solely by finding prior art corollaries for the claimed elements would permit an examiner [or accused infringer] to use the claimed invention itself as a blueprint for piecing together elements in the prior art to defeat the patentability of the claimed invention.").

1994). In other words, there must be "something in the prior art as a whole to suggest the desirability, and thus the obviousness, of making the combination."[6]

This requirement of a suggestion to combine prior art to demonstrate obviousness prevents hindsight reconstruction by accused infringers, like KSR, who try to use the patent-in-suit as a guide through the maze of prior art references, combining the right references in the right way so as to achieve the result of the claims in suit. *Grain Processing Corp. v. American Maize Products Corp.*, 840 F.2d 902, 907 (Fed. Cir. 1988). *See also, Ecolochem, Inc. v. Southern California Edison Co.*, 227 F.3d 1361, 1371 (Fed. Cir. 2000) ("[T]he best defense against hindsight-based obvious analysis is the rigorous application of the requirement for a showing of a teaching or motivation to combine the prior art references. . . . Combining prior art references without evidence of such a suggestion, teaching, or motivation simply takes the inventor's disclosure as a blueprint for piecing together the prior art to defeat patentability — the essence of hindsight."). It is well-established that the showing of the motivation to combine references must be "clear and particular."

---

6. See, *Interconnect Planning Corp. v. Feil*, 774 F.2d 1132, 1143 (Fed. Cir. 1985); *Custom Accessories, Inc. v. Jeffrey-Allan Indus., Inc.*, 807 F.2d 955, 959 (Fed. Cir. 1986) (a patent will not be deemed invalid merely because it is made up of a 'combination of old elements.'); *SmithKline Diagnostics, Inc. v. Helena Labs. Corp.*, 859 F.2d 878, 887 (Fed. Cir. 1988) ("A finding that claims which combine several prior art references are invalid based merely upon the fact that those similar elements exist is 'contrary to statute and would defeat the congressional purpose in enacting Title 35.'").

Appendix I

In *Heidelberger, supra,* the assignee of a patented device called a "chopper," which folded sheets of printed matter as they emerged from a printing press, sued a printing press manufacturer for infringement. The defendant alleged that the patent was invalid for obviousness. Although each of the elements of the patent could be found somewhere within the prior art, the Federal Circuit rejected the obviousness challenge and emphasized that "the several prior art choppers were encumbered by limitations and disadvantages that had not previously been overcome." *Heidelberger,* 21 F.3d at 1072. Moreover, several companies, including the defendant, had tried and failed to meet the particularized need for a precise and high-speed chopper. By combining a "double offset circle drive mechanism" with a "printing press chopper," the patentee was able to overcome many of the limitations that had hindered progress in this area. Explicitly noting that "[t]he motivation to combine references can not come from the invention itself," the court held that "[t]here is nothing in the prior art to lead a person of ordinary skill to the combination of the structures in these references to design a high-speed chopper for use in rotary printing presses, other than the hindsight knowledge of [the inventor's] construction." *Id. See also, Ecolochem, supra,* 227 F.3d at 1371 ("'Hindsight reconstruction' cannot be used 'to pick and choose among isolated disclosures in the prior art to deprecate the claimed invention.'"); *ATD Corp v. Lydall Inc.,* 159 F.3d 534, 546 (Fed. Cir. 1998); *Winner International Royalty Corp. v. Wang,* 202 F.3d 1340, 1348 (Fed. Cir. 2000).

If it were sufficient for a party to simply demonstrate that all of the elements of a claim are found in multiple patents, virtually all patents would be invalidated on

obviousness grounds. *Lindemann Maschinefabrik Gmbh v. American Hoist and Derrick Company,* 730 F.2d 1452 (Fed. Cir. 1984), is instructive in this regard. In *Lindemann,* the patent at issue related to a machine used for crushing massive metal scrap. The invention combined one feature previously used in a garbage compactor with a second feature found in a large shearing device. The Federal Circuit held that the district court's broad definition of the problem as "the problem of compressing waste materials" was clearly erroneous and reversed the holding of obviousness. *Id.* at 1460. "That the claimed invention may employ known principles does not in itself establish that the invention would have been obvious. Most inventions do." *Id.* at 1462.

Significantly, courts routinely hold that it is a *question of fact* whether a party has established the requisite motivation to combine. See, *e.g., Winner International Royalty Corp., supra,* 202 F.3d at 1348; *Emerson Electric Co. v. Spartan Tool, LLC,* 223 F. Supp.2d 856 (N.D. Ohio 2002).

3. Problem Addressed by the Invention

In determining whether a particular combination of prior art would be obvious, a court is to consider the nature of the problem that the inventor was trying to solve. The problem confronting the inventor is significant because whether one of ordinary skill in the art would find a particular combination to be obvious depends on whether this hypothetical person was confronted with the same problem as the inventor. *See, In Re Rouffet,* 149 F.3d at 1357 (to make a finding of obviousness, there must be evidence that

"a skilled artisan, confronted with the same problems as the inventor and with no knowledge of the claimed invention, would select the elements from the cited prior art references for combination in the manner claimed").[7] In other words, an obviousness challenge must fail if it does not frame the challenge in terms of the problem confronted by the inventor.

V. ARGUMENT

A. Summary of Argument

KSR claims that the Engelgau Patent is obvious. However, before the Engelgau Patent, no inventor had combined, in the way that Engelgau did, an adjustable pedal and an electronic control **so that the electronic control was attached to the pedal mounting bracket.** The Engelgau Patent represented a departure from the evolution of the relevant prior art in the fields of pedal assemblies and electronic controls. Initially, there were fixed pedals with cable-actuated throttle control mechanisms. Subsequently, inventors replaced cables with electronic controls on these

---

7. *See also, WMS Gaming, Inc. v. International Game Technology,* 184 F.3d 1339, 1359 (Fed. Cir. 1999) (court found that patent was not obvious where prior art in gaming technology did not teach decreasing odds of winning, which was a critical element of the patent at issue, and the stated objectives of the prior art patents was to "overcome the deficiencies of mechanical reels, such as noise and being susceptible to wear and tampering"); *Aero Industries, Inc. v. John Donovan Enterprises-Florida, Inc.*, 80 F. Supp. 2d 963, 975 (S.D. Ind. 1999) (court held that the alleged infringer failed to demonstrate that the prior art was "reasonably pertinent" to the problem that the inventor attempted to solve).

fixed pedal assemblies. These electronic controls were attached to the pedal itself. The next significant inventions were adjustable pedals with electronic controls. In the early adjustable pedal with electronic control designs, the electronic control was attached directly to the pedal, in the same manner that those electronic controls had been attached to fixed pedal assemblies. The novelty of the Engelgau Patent stems from the decision to separate the pedal from the electronic control. Engelgau viewed this change as a way to overcome the major disadvantage of prior adjustable pedal/ electronic control designs: They were complicated and expensive to assemble and took up a significant amount of packaging space. [*See*, **Ex. A**, ¶7.]

KSR's invalidity challenge fails because it is built on an erroneous assumption. KSR assumed that the problem that the inventor, Steven Engelgau, wanted to solve was the following: How to attach an electronic control to an adjustable pedal. Having made this assumption, KSR found prior art that solved this problem — the combination of the Asano adjustable pedal patent (United States Patent No. 5,010,782) and the CTS 503 Series electronic control. It then concluded that a typical pedal engineer who needed to attach an electronic control to an adjustable pedal assembly would have known to combine an assembly like Asano with an electronic control like the CTS sensor.

But this house of cards falls because the problem that Engelgau was trying to solve was not simply the combination of an adjustable pedal with an attached electronic control. Rather, Engelgau tried to invent an adjustable pedal assembly with an electronic control that was less complex, less expensive,

and easier to package than its predecessors. [*See,* **Ex. A,** ¶7.] In particular, Engelgau needed to develop an adjustable pedal with electronic control that would allow the movement of the pedal back and forth within a narrow pedal compartment; he solved his space constraints by (among other means) placing the electronic control on the pedal mounting bracket as opposed to the variety of other locations at which he could have placed the electronic control. [*See,* **Ex. A,** ¶8.]

The Engelgau patent examiner had before him several examples of adjustable pedals and electronic controls — including prior art that is actually closer to the Engelgau Patent than that cited by KSR here — but none of these examples suggested a combination like the one that Engelgau invented.[8] Because no other person had invented an adjustable pedal assembly with electronic control that placed the electronic control on the pedal mounting bracket like Engelgau did, the United States Patent and Trademark Office issued a patent to Engelgau.

---

8. The most pertinent prior art references for purposes of this Motion are United States Patent Nos. 5,632,183; 4,915,075; 4,958,607; 5,233,882; and 5,887,488. [*See*, **Exs. B, C, D, E, F.**] The relevancy of these patents will be discussed in greater detail below. Attached as **Exhibit G** is the form that the patent examiner used to indicate the prior art that he considered.

B. No Teaching or Suggestion in Prior Art to Combine the Elements in the Manner Specified in Claim 4 of the Engelgau Patent

Obviousness determinations are made by placing oneself in the shoes of a person of ordinary skill in the art.[9] Teleflex's experts are Professor Clark Radcliffe and Timothy Andresen. Dr. Radcliffe is a professor of mechanical engineering at Michigan State University; Mr. Andresen is an automotive pedal engineer with 26 years of experience at Ford Motor Company. Both have concluded that the Engelgau Patent involved a combination of elements that would not have been obvious to one of ordinary skill in the art. [*See*, **Ex. H**, ¶14; **Ex. I**, ¶¶17,9.] Conversely, neither Larry Willemsen nor Daniel Kruger (whose Declarations KSR attached to KSR's Motion for Summary Judgment) have offered any opinion regarding whether the combination found in the Engelgau design would have been obvious to one of ordinary skill in the art. See, *Wesley Jessen Corp. v. Coopervision, Inc.*, 207 F. Supp.2d 1103, 1109 (C.D. Cal. 2002) (court denied summary judgment on invalidity where the defendant's expert

---

9. Teleflex defines a person of ordinary skill in the art as one with an undergraduate degree in mechanical engineering (or an equivalent amount of industry experience) who has familiarity with pedal control systems for vehicles. KSR's definition sets a lower threshold of a person with "a minimum of two (2) years of college level training in mechanical engineering and two-three years' work experience spanning at least one complete pedal design 'cycle'." [*See*, Brief in Support of KSR's Motion for Summary Judgment on Invalidity ("Invalidity Brief"), p. 18.] Regardless of which definition this Court chooses to adopt, the obviousness analysis would remain substantially unaffected.

"does not state in either his declaration or deposition that the language of the [prior art] patent suggested to a person of ordinary skill in the art that the Knapp patent should be combined with the LeGrand Fuhrman lenses").[10]

KSR has done little to meet its substantial burden of demonstrating that Professor Radcliffe and Mr. Andresen are wrong. In fact, KSR has done nothing more than claim that both adjustable pedals and electronic controls existed within the prior art. This is far from sufficient to carry the burden of proving that this combination **in the manner claimed in Claim 4 of the Engelgau Patent** would have been obvious to one of ordinary skill in the art. As explained in Subsection IV.B of this Brief, before this Court can declare the Engelgau Patent invalid, KSR must demonstrate, among other things, that there was some teaching or suggestion in the prior art to combine the elements in the manner specified in the claim. *See, e.g., Ecolochem, Inc., supra,* 227 F.3d at 1371. KSR seeks to satisfy the motivation requirement by arguing that the prior art includes "specific teachings with respect to the desirability of electronic, as distinguished from mechanical, throttle controls in automotive vehicles" and, in particular, includes teaching of the desirability of employing "linkages between vehicle accelerator pedals and engine throttles" and of locating an electronic pedal position sensor "inside the vehicle's passenger compartment, rather than in a vehicle's engine compartment." [*See,* Invalidity Brief, p. 23-24.]

---

10. Even if KSR belatedly offered opinions from Mr. Willemsen and Dr. Kruger, these opinions would be suspect because Mr. Willemsen is a KSR employee and Dr. Kruger's background is in aerospace, not automotive, engineering.

Appendix 1

KSR claims that Teleflex's motivations for combining Asano with an of-the-shelf electronic pedal position sensor are at least as convincing as the motivations that the Federal Circuit found sufficient to prove obviousness in the following cases: *Ryko Manufacturing Co., v. Nu-Star Co.*, 950 F.2d 714, 717 (Fed. Cir. 1991); *Novo Nordisk A/S v. Becton Dickinson & Co.*, 304 F.2d 1216 (Fed. Cir. 2002); *Richardson-Vicks, Inc. v. Upjohn Co.*, 122 F.3d 1476 (Fed. Cir. 1997). KSR's argument would only have merit if the problem confronted by Engelgau were as simple as KSR seeks to characterize it — that is, merely combining an adjustable pedal assembly with an electronic control.

Such simplistic combinations are the defining characteristic of the cases cited by KSR. For instance, in *Ryko Manufacturing Co.*, the Federal Circuit characterized the "difference between the prior art and the claim at issue [as] essentially the substitution of a keypad code device for a coin box or other common input device." There, the problem that the inventor tried to solve was putting a keypad code in an automatic car wash. Because the keypad entry system that the patentee combined with an automatic car wash was prevalent in the prior art, and there was nothing unique about the structure of the combination, the court deemed the patent invalid as obvious.

Similarly, in *Richardson-Vicks, Inc. v. Upjohn Co.*, 122 F.3d 1476 (Fed. Cir. 1997), the court held that the combination of two well-known medications into one tablet for the relief of cough, cold and flu symptoms was invalid as obvious. There, the problem that the inventor tried to solve was putting two common medications together. The

overriding factor in the court's analysis was that doctors had long prescribed both medications together, although not combined into one mixture, for that very purpose.

Finally, in *Novo Nordisk A/S v. Becton Dickinson & Co.,,* 304 F.2d 1216 (Fed. Cir. 2002), the relevant claim involved an injection pen with 30 gauge needles. The prior art included pen-style insulin injection systems that either did not state the needle size or showed needles of 27 and 28 gauge. In addition, the prior art included 30 gauge needles for insulin injections. The court determined that there was nothing unique about the manner in which the inventor combined the two elements from the prior art.[11]

Again, these cases are inapposite because they address situations in which the problems that the inventors tried to solve simply required the perfunctory combination of common elements. Here, the actual problem that Engelgau confronted — as distinguished from the fictional problem that KSR fabricates in its brief — could not be solved by the routine combination of common elements.

---

11. Moreover, the Federal Circuit in *Novo Nordisk* merely upheld a jury's verdict that the invention was obvious. Affirming a jury verdict involves a far more lenient standard than this Court faces in ruling on a motion for summary judgment. The *Novo Nordisk* court merely had to determine that a reasonable jury could have found that the invention was obvious. Conversely, KSR asks this Court to find, as a matter of law, that no reasonable jury could find that the invention was not obvious.

C. KSR Mischaracterized Problem Solved by the Engelgau Patent

KSR's entire invalidity argument is based on an erroneous assumption. KSR has claimed that the problem faced by Engelgau could have been solved by combining the design of the Asano patent with any off-the-shelf electronic throttle control like the CTS 503 Sensor. However, combining Asano with an electronic control would not have solved any of the problems confronting Engelgau in his design of the Engelgau Patent.

KSR acknowledges that "[t]he relevant art is defined by the nature of the problem confronting the would-be inventor." [*See,* Invalidity Brief, p. 21.] However, KSR has mischaracterized the problem facing Mr. Engelgau at the time that he developed the Engelgau Patent in order to ease its burden of proving obviousness. KSR has claimed that "the 'problem' ostensibly confronting the '565 inventor was to provide an adjustable pedal assembly that could be installed in a vehicle whose engine utilized an electronic, rather than a cable-actuated, throttle control system." [*See,* Invalidity Brief, p. 2[illegible]] But this was not the essence of the problem Engelgau confronted. Indeed, the Engelgau Patent concedes that adjustable pedals for use with engines utilizing electronic throttle control systems were known in the prior art. In fact, in the section of the Engelgau Patent entitled "Background of the Invention," the patent states that "[o]ne such adjustment apparatus used with an electronic throttle control is shown in U.S. Pat. No. 5,819,593 assigned to the assignee of the present invention." [*See.* **Ex. J**, Col. 1, lines 43-47.] Clearly, therefore, KSR's characterization of the problem addressed by Engelgau cannot be correct.

Rather, as expressly stated in the Engelgau Patent, the problem that Engelgau confronted was developing a pedal assembly that not only "includes both an adjustment apparatus and an electronic control" but that is not expensive, time consuming to assemble, and that does not require a significant amount of packaging space. [*See,* **Ex. J**, col. 1, lines 48-53.] KSR disingenuously ignores multiple, credible references to the actual problem confronted by Engelgau. In its First Set of Interrogatories, KSR requested that Teleflex "identify each and any problem that Teleflex contends (a) was [solved by] any claimed invention of any Patent-in-Suit; and (b) was not solved by any pedal assembly disclosed in the prior art of any of the Patents-in-Suit." Teleflex responded as follows:

> To the extent that this interrogatory asks which problem or problems Teleflex contends were intended to be solved by the Teleflex Automotive Patents, Teleflex responds as follows: as for the '565 Patent, **Teleflex attempted to provide a design for an adjustable pedal system with electronic control that would address issues of packaging, assembly, and cost . . .**

(emphasis added). Teleflex's response mirrored the text of the Engelgau Patent which sets forth the background of the invention and provides a detailed explanation of the problem that Engelgau set out to solve.

> When a vehicle control pedal assembly includes both an adjustment apparatus and an electronic throttle control, the pedal assembly can be

> complex with a great number of parts. These control pedal assemblies can be expensive, time consuming to assemble, and require a significant amount of packaging space.

[*See,* **Ex. J**, col. 1, lines 48-53.] The "Summary of the Invention and Advantages" section of the Engelgau Patent further explains that "the subject invention provides a simplified vehicle control pedal assembly that is less expensive, and which uses fewer parts and is easier to package within the vehicle." [*See*, **Ex. J**, col. 2, lines 2-5.]

There were various possible ways that Engelgau could have sought to resolve this problem and there was nothing in the nature of the problem that inexorably led him to the design of the Engelgau Patent. For example, Engelgau could have placed the electronic control in any number of locations within the vehicle, such as inside the engine compartment, on a vehicle firewall spaced from the mounting bracket, on a vehicle dashboard, or on a different type of adjustment element. [*See*, **Ex. A**, ¶8.]

D. KSR's Misuse of Prior Art

Because KSR cannot demonstrate motivation to combine by looking at the prior art **at the time of the Engelgau Patent,** it engaged in an improper hindsight analysis. That is, KSR started with the elements of the Engelgau Patent and then attempted to locate each of those elements in the prior art. Courts have been careful to prevent hindsight reconstruction by accused infringers like KSR who try to use the patent-in-suit as a guide through the maze of prior

art references, combining the right references in the right way so as to achieve the result of the claims in suit. *See, Grain Processing Corp, supra,* 840 F.2d at 907. If this were the proper way to test for obviousness, virtually every patented invention would be deemed invalid. Rather, the appropriate way to view obviousness is to ask whether, without knowing of the Engelgau Patent, the prior art references make obvious Engelgau's solution to the problem of developing an inexpensive, more easily assembled, and more conveniently packaged adjustable pedal assembly with electronic control. This question must be answered in the negative.

1. Asano Pedal Involved a Complex Design that Could Not Have Motivated Solution to Problem Solved by Engelgau

The Engelgau Patent provided a feature previously unavailable, specifically, an "electronic throttle control attached to the support for controlling an engine throttle." This electronic control responded to the pivotal motion of the adjustable pedal at the support, thereby providing a simpler mounting position that was both less expensive and easier to package than devices in the prior art. [*See,* **Ex. A**, ¶7; **Ex. H**, ¶15.] Contrary to KSR's suggestions, it would not have made sense for Engelgau to combine the design of the Asano patent with the CTS 503 Series pedal position sensor in order to create an adjustable pedal with ETC that would be inexpensive, easily assembled, and would utilize less vehicle space. First, the Asano patent nowhere discloses an adjustable pedal assembly that includes an electronic control. Nor does KSR point to any teaching or suggestion

in the Asano patent to incorporate an electronic control into the pedal assembly, let alone any suggestion that it be incorporated in the manner specified in Claim 4 of the Engelgau Patent. Second, the Asano patent is directed to an entirely different problem than that confronted by Engelgau. Asano addressed the problem of developing an adjustable pedal in which the force applied to the pedal "is held substantially constant under the same pivotal displacement distance of the pedal pad caused by a driver's depression action of the pedal, irrespective of the adjusted pedal pad position." [*See,* **Ex. K**, col. 1, lines 57-60][12] In other words, Asano wanted to invent an adjustable pedal that would require the same pressure to move the pedal regardless of where the pedal was located on the adjustment spectrum.

In order to solve this problem, Asano developed a complex mechanical assembly that was expensive, time consuming to assemble, and required a significant amount

---

12. The "Summary of the Invention" section of the Asano patent sets forth the goals that the inventor sought to accomplish and the problem(s) that the design was intended to solve:

> Therefore, it is an object of the present invention to provide a pedal assembly for a vehicle which enables a position of a pedal pad . . . to be adjusted forwardly and rearwardly of the vehicle, i.e. in a longitudinal direction of the vehicle, wherein a force applied to an operating member which transmits the applied force to a vehicle operation system such as a braking system, an

(Cont'd)

of packaging space. [*See,* **Ex. A,** ¶10; Ex. **H,** ¶16.] Thus, someone in Engelgau's shoes, who was trying to create an adjustable pedal assembly with an attached electronic control that was easy to package in a narrow space and was also relatively simple and inexpensive, would shun Asano.

2. Patent Examiner Review of Prior Art

Significantly, the Engelgau patent examiner considered

(Cont'd)

> engine throttle valve and a clutch system, is held substantially constant under the same pivotal displacement distance of the pedal pad caused by a driver's depression action of the pedal, irrespective of the adjusted pedal pad position.
>
> Another object of the present invention is to provide a position adjustable pedal assembly, wherein a required depression force or leg power for depressing the pedal pad by the same distance is maintained substantially constant, irrespective of the adjusted pedal pad position.
>
> A further object of the present invention is to provide a position adjustable pedal assembly, wherein a full depression displacement distance of the pedal pad in circumferential direction is held substantially constant by using adjustable stopper means, irrespective of the adjusted pedal position.
>
> A still further object of the present invention is to provide a position adjustable pedal assembly, wherein a reaction force applied to components of the pedal assembly in

(Cont'd)

a patent that was far closer to the Engelgau Patent than was the Asano patent; he also considered numerous patents that were analogous to the CTS 503 Series pedal position sensor. Having considered these superior references, the examiner still allowed the Engelgau Patent to issue. The reference that is superior to Asano is United States Patent No. 5,632,183 ("the Rixon '183 patent"), which was invented by another Teleflex employee and a co-worker of Engelgau. [*See,* **Ex. B.**] The patents that are analogous to the CTS 503 Series pedal position sensors are United States Patent Nos. 4,915,075 ("the '075 patent"); 4,958,607 ("the '607 patent"); 5,233,882 ("the '882 patent"); and 5,887,488 ("the '488 patent") (collectively referred to as "the cited electronic sensor patents") [*See,* **Exs. C, D, E, F.**]

KSR does not discuss the Rixon '183 patent at all in its Invalidity Brief because KSR recognizes that the Rixon '183 patent is closer to the Engelgau patent than is the Asano patent. Similarly, KSR did not discuss any of the cited electronic sensor patents in its Invalidity Brief because KSR

(Cont'd)

> the direction along a length of the vehicle, i.e. in the longitudinal direction of the vehicle to be generated in response to the depression force applied to the pedal pad by the driver is considerably reduced so as to attain the strength of the pedal assembly as well as smooth pedal operation feelings.

[*See,* **Ex. K**, col. 1, lines 48-68; col. 2, lines 1-12.] Clearly, none of the objectives that Engelgau sought to address were considered by Asano.

recognized that these patents are at least equivalent to the CTS 503 Series pedal position sensor. In other words, the patent examiner considered the same, or better, prior art than that presented by KSR and determined that the Engelgau Patent was not obvious based on the teachings in that prior art.

3. KSR's Discussion of the Rixon '593 Patent

KSR briefly discusses another Teleflex patent, namely United States Patent No. 5,819,593 ("the Rixon '593 patent") in its Invalidity Brief. [*See*, **Ex. L.**] Unlike the Asano Patent which lacks an electronic control, the Rixon '593 patent depicts an adjustable pedal assembly with electronic control. Therefore, KSR's suggestion that "the 'problem' ostensibly confronting the '565 inventor was to provide an adjustable pedal assembly that could be installed in a vehicle whose engine utilized an electronic, rather than a cable-actuated throttle control system" is completely erroneous. The Rixon '593 patent had already solved that problem. Moreover, given that the inventor of the '593 patent had assigned his invention to Teleflex, there would have been no motivation for Teleflex to engage Engelgau to find a solution to a problem that had already been solved by one of its own employees.

The adjustable pedal assembly depicted in the Rixon '593 patent contains an electronic control situated away from the pedal assembly's support, thereby requiring more complex mounting — both mechanically and electrically — than the Engelgau Patent. The complexity, cost and packaging difficulties associated with the Rixon '593 patent highlighted the problem subsequently addressed by the Engelgau Patent. [*See*, **Ex. A**, ¶7; **Ex. H**, ¶17.]

E. Secondary Considerations of Non-Obviousness Bolster Teleflex's Position that the Engelgau Patent Is Valid

Commercial success represents an objective indicator of non-obviousness. *See, Avia Group Int'l, Inc. v. L.A. Gear California, Inc.*, 853 F.2d 1557, 1563-64 (Fed. Cir. 1988). Teleflex has experienced considerable commercial success with its adjustable pedal assemblies conceived from the Engelgau Patent. For example, Teleflex's adjustable pedal assembly design has been placed in Ford's U-137/P-131 program. [*See,* **Ex. M**, ¶3.] The U-137/P-131 program vehicles are the Ford Excursion, F-250, and F-350. [*See,* **Ex. M**, ¶4.] To date, Teleflex has shipped approximately 150,000 adjustable pedal units to Ford for the U-137/P-131 program. [*See,* **Ex. M**, ¶5] In addition, upon information and belief, the GMT-800 and GMT-360 platforms are large-volume programs, further demonstrating the commercial success of Engelgau's invention.

VI. CONCLUSION

Based on the stipulated dismissal with prejudice of Teleflex's claim for infringement of the Johansson Patents, this Court need not make any findings with respect to the validity or invalidity of the Johansson Patents. With respect to the Engelgau Patent, KSR has failed to demonstrate via clear and convincing evidence that the combination of elements found in the Engelgau Patent would have been obvious to one of ordinary skill in the art. At least, this is an issue of disputed fact to be decided by a jury. Therefore, Teleflex respectfully requests that this Court deny KSR's

Appendix 1

Motion for Summary Judgment on Invalidity of the Engelgau Patent in its entirety.

YOUNG & SUSSER, P.C.

BY: s/ RODGER D. YOUNG
RODGER D. YOUNG (P22652)
STEVEN SUSSER (P52940)
KEVIN B. HIRSCH (p58757)
Attorneys for Defendant
26200 American Drive, Suite 305
Southfield, MI 48034
248.353.8620

Date: August 11, 2003

Appendix J

Exhibit	Supplemental Joint Appendix page
A	141
B	144
C	151
D	159
E	167
F	187
G	203
H	204
I	208
J	211
K	219
L	233
M	242

APPENDIX J — REPLY BRIEF IN SUPPORT OF DEFENDANT'S MOTION FOR SUMMARY JUDGMENT OF INVALIDITY DATED AND FILED AUGUST 26, 2003

UNITED STATES DISTRICT COURT
EASTERN DISTRICT OF MICHIGAN
SOUTHERN DIVISION

Case No: 02-74586

TELEFLEX INCORPORATED,

Plaintiff,

vs.

KSR INTERNATIONAL CO.,

Defendant.

RODGER C. YOUNG (P22652)
STEVEN SUSSER (P52940)
DAVID J. POIRIER (P62928)
Young & Susser, P.C.
Attorneys for Plaintiff
26200 American Drive, Suite 305
Southfield, Michigan 48034
(248) 353-8620

Appendix J

KENNETH J. MCINTYRE (P17450)
L. PAHL ZINN (P57516)
Dickinson Wright PLLC
Attorneys for Defendant
500 Woodward Avenue, Suite 4000
Detroit, Michigan 48226-3425
(313) 223-3500

JAMES W. DABNEY
Pennie & Edmonds LLP
Attorneys for Defendant
1155 Avenue of the Americas
New York, New York 10036
(212) 790-9090

REPLY BRIEF IN SUPPORT OF DEFENDANT'S MOTION FOR SUMMARY JUDGMENT OF INVALIDITY

[Tables intentionally omitted]

On August 8, 2003, plaintiff Teleflex Inc. ("Teleflex") and non-party Technology Holding Company ("THC") stipulated to the dismissal, with prejudice, of Teleflex's claims in this action alleging infringement of U.S. Patent No. 6,305,239 B1 (the "'239 Patent") and U.S. Patent No. 6,374,695 B1 (the "'695 Patent"), in view of published French Patent Application No. 2,739,947 to Urset (see Exhibit 1 hereto, at 2).[1]

1. The Urset reference clearly invalidated the '239 and '695 Patents under 35 U.S.C. § 102(a), as demonstrated in Exhibits 6 and (Cont'd)

Appendix J

This Court on August 11, 2003, ordered the dismissal, with prejudice, of the second and third claims for relief asserted in Teleflex's Second Amended Complaint filed November 18, 2002 (*id.*). This Court further "ORDERED that the '239 Patent and the '695 Patent be and are dedicated to the public under 35 U.S.C. § 253" (*id.* at 3). In view of these developments, the Court need not take any further action on KSR's pending Motion for Summary Judgment of Invalidity filed July 7, 2003, insofar as the '239 and '695 Patents are concerned.[2]

With regard to plaintiff's lone surviving claim for alleged infringement of Claim 4 of U.S. Patent No. 6,237,565 B1 (the "'565 Patent"), Teleflex's Response to KSR's Motion for Summary Judgment of Invalidity ("Pltf. Opp. Br.") does not address or controvert a single one of the facts presented by KSR in support of its defense of invalidity under 35 U.S.C. § 103 (a) (Willemsen Decl. ¶¶ 1-22, 32-44 & Exs. 1-2, 8-12;

(Cont'd)

7 of the Declaration of Larry Willemsen filed July 7, 2003 (hereinafter, "Willemsen Decl.") and in the computer animation files named "Urset" in Exhibit 1 to the Declaration of Daniel H. Kruger filed July 7, 2003 (hereinafter, "Kruger Decl."). *See also* KSR's Brief in Support of Defendant's Motion for Summary Judgment of Invalidity filed July 7, 2003 ("KSR Main Br.") at 4-5, 16-19, and Exhibit 1.

2. It is a measure of this lawsuit's unusual character that Teleflex and THC totally abandoned the '239 and '695 Patents scarcely a month after Teleflex filed a Motion for Summary Judgment of Infringement of those same patents on July 7, 2003.

Kruger Decl. ¶¶ 4-6, 25-30 & Ex. 1; *see* KSR Main Br. at 1-11, 19-35 & Exs. 1, 5-12).

Thus, under Fed. R. Civ. P. 56(c) and (e), this Court can and should determine that there is no genuine issue to be tried as to any of the following facts:

Background

— As of January 26, 1998, the design of accelerator pedals installed in cars and light trucks sold in the United States was substantially determined by the type of engine and fuel system that an automaker specified was going to be installed in a vehicle (Willemsen Decl. ¶¶ 11, 22).

— As of January 26, 1998, an increasing number of vehicles sold in the United States came equipped with electronic throttle control systems ("ETC's"), because such systems offered various operational advantages over cable-actuated throttle control systems such as reduced emissions, improved fuel economy, simplified cruise controls, and improved slip reduction (Willemsen Decl. ¶¶ 9, 34; *see* KSR Main Br. at 23-24 & Exs. 7-8).

— As of January 26, 1988, vehicles equipped with electronic throttle controls, by their very nature, required the use of electronic sensors capable of sensing an accelerator pedal's position and emitting electrical signals corresponding to the pedal's position (Willemsen Decl. ¶ 11, 22).

— As of January 26, 1998, whether a vehicle pedal assembly actuated a cable, or an electronic position sensor,

was dependent on the type of fuel system the pedal was being designed to actuate (Willemsen Decl. ¶ 22).

— As of January 26, 1998, one or more companies in the United States including CTS Corporation of Elkhart, Indiana ("CTS") made and sold modular electronic pedal position sensors that (a) were specifically designed to engage the pivot of an accelerator pedal, and (b) were specifically intended and marketed for use to actuate electronic controls in vehicles, as exemplified by the "position sensor and switch assembly 17" disclosed in U.S. Patent No. 5,385,068 filed December 18, 1992 (Willemsen Decl. ¶ 12; KSR Main Br. at 25 & Ex. 10), and as further exemplified by the CTS "503 Series" sensor installed in certain 1994 Chevrolet C/K pick-up trucks (*id.* ¶¶ 14-19 & Exs. 8-10).

— As of January 26, 1998, coupling a position sensor to a vehicle's accelerator pedal pivot shaft (with the sensor housing attached to the pedal's support bracket) was a standard technique used to enable accelerator pedals to communicate with and actuate electronic throttle controls (Willemsen Decl. ¶¶ 13, 21), as shown in various printed publications in the prior art (e.g., KSR Main Br. Ex. 9, disclosing "potentiometer 12" mounted to "side wall 18" of "support structure 4" and engaged with "axial shaft 76"; KSR Main Br. Ex 10, disclosing "position sensor 17" mounted on "moving bracket 11" and engaged with "shaft 13"), and as further as exemplified by the accelerator pedals installed in certain 1994 Chevrolet C/K pick-up trucks (*id.* ¶¶ 14-19 & Exs. 8-10).

Appendix J

Prosecution History of '565 Patent Claim 4

— The '565 Patent issued on U.S. Application No. 09/643,422 filed August 22, 2000 (the "'422 Application"). The '422 Application was a "continuation" of U.S. Application No. 09/236,975 filed January 26, 1999 (the "'975 Application"). The latter application matured into U.S. Patent No. 6,109,241 issued August 29, 2000 (the "'241 Patent").

— Concurrently with the filing of the '422 Application, Teleflex filed a "Preliminary Amendment" which cancelled all claims that had been made in the "parent" '975 Application, and set forth four new claims designated "Claims 20-23" (see Exhibit 2 hereto; Third Declaration of James W. Dabney, sworn to August 25, 2003 [hereinafter, "Third Dabney Decl."] ¶ 3 & Ex. 2).

— As shown in Exhibit 2 hereto, the original "Claims 20-23" filed by Teleflex in the '422 Application each recited (a) "a support (18) for mounting to a vehicle structure"; (b) "a guide member (62) rotatably supported by said support (18) for pivotal movement about a pivot axis"; (c) "a pedal arm (14) supported on said guide member (62) for rectilinear movement in fore and aft directions relative to said guide member (62) and said pivot axis (26) between various adjusted positions"; and (d) "an electronic control (28) supported on said support (18) and responsive to pivotal movement of said pedal arm (14) and said guide member (62) about said pivot axis" (see Exhibit 2). The original claims were silent with respect to whether the recited pedal

pivot axis remained constant during "rectilinear movement in fore and aft directions" (*id*).[3]

— In an Office Action dated November 6, 2000 (see Exhibit 3 hereto), the Examiner of the '422 Application rejected each of the original "Claims 20-23" as being unpatentable under 35 U.S.C. § 103(a) in view of two references, namely, U.S. Patent No. 5,460,061 to Redding ("Redding"; see Exhibit 4 hereto) and U.S. Patent No. 5,063,811 to Smith ("Smith"; see Exhibit 5 hereto). Redding discloses an adjustable accelerator pedal assembly whose accelerator pedal arm (20) slides back and forth along a guide member (72) (see Exhibit 4 hereto). Smith discloses an electronic pedal position sensor (28) attached to an accelerator pedal support bracket (40, 26) and engaged with a pivot shaft (70) (see Exhibit 5 hereto).

---

3. It bears noting that, unlike asserted Claim 4 of the '565 Patent, the original Claims 20-23 of the '422 Application recited structure (e.g., "a guide member (62) rotatably supported") comprising the alleged "invention" described in the application — structure that clearly does not exist in the accused GMT-360 and GMT-800 pedal systems manufactured by KSR. In asserting that the accused GMT-360 and GMT-800 pedal systems purportedly embody the "invention" described in the '565 Patent, Teleflex simply ignores that "claims are directed to the invention that is described in the specification; they do not have meaning removed from the context from which they arose." *Netword, LLC v. Centraal Corp.*, 242 F.3d 1347, 1352 (Fed. Cir. 2001). "[N]either do the claims enlarge what is patented beyond what the inventor has described as the invention." *Id.*

— In concluding that the subject matter recited in original "Claims 20-23" was unpatentable under 35 U.S.C. § 103(a), the Examiner stated (see Exhibit 3 hereto, at 2):

> Smith shows that the use of an electronic throttle control means (28) attached to a support member (40, 26) in a pedal assembly is old and well known in the art. Since the prior art references are from the field of endeavor, the purpose disclosed by Brown [sic] would have been recognized in the pertinent art of Redding. Therefore, it would have been obvious at the time the invention was made to provide the device of Redding with the electronic throttle control means attached to a support member as taught by Smith.

— In response to the Examiner's rejection of its original claims, Teleflex did not traverse, or voice any disagreement with, any of the Examiner's reasoning or conclusions quoted above. Teleflex made no argument, for example, that the subject matter recited in original "Claims 20-23" was patentable because the recited "electronic control" was "attached to the pedal mounting bracket," as opposed to being "attached to the pedal itself," as Teleflex now asserts for the first time in opposition to summary judgment (Pltf. Opp. Br. at 10-11). Teleflex also did not traverse, or voice any disagreement with, the Examiner's conclusion that at the time of the alleged "invention," a person of ordinary skill in the art of the '422 Application would have been motivated to combine, and would have considered it obvious to combine, the electronic position sensor disclosed in Smith (see Exhibit 5 hereto) with the

adjustable pedal assembly disclosed in Redding (see Exhibit 4 hereto) to arrive at what Teleflex was then pointing to, in original Claims 20-23, as the subject matter that Mr. Engelgau purportedly regarded as his "invention."[4]

— Instead, by a further Amendment of the '422 Application dated January 29, 2001 (see Exhibit 6 hereto), Teleflex's patent counsel submitted a wholly new Claim 24 (which became Claim 4 of the '565 Patent) which *excluded* the Redding pedal design from the scope of the subject matter sought to be patented through addition of the limitation, "wherein the position of said pivot (24) remains constant while said pedal arm (14) moves in fore and aft directions with respect to said pivot (24)" (*see* Exhibit 6 hereto, at 2). The Redding reference, by contrast, disclosed an adjustable pedal assembly whose accelerator pedal pivot moved during adjustment (see Exhibit 3 hereto at col. 7, lines 33-38; "As the pedal arm moves fore and aft relative to the adjuster member, cam pin 112 rides in cam member slot 76d to . . . selectively adjust the position of pivot axis pin 110").

— Having thus restated the subject matter sought to be patented using claim language that excluded the adjustable pedal design disclosed in Redding, Teleflex's patent counsel then stated to the Examiner: "Independent claim 24 is a duplicate of claim 15 in the parent application except the

---

4. 35 U.S.C. § 112 ¶ 2 requires, as a condition to the issuance of a valid patent, that the "specification" of a patent application "conclude with one or more claims particularly pointing out and distinctly claiming the subject matter which the applicant regards as his invention."

word 'throttle' has been eliminated from claim 15 just in case there could be an argument that claim 15 does not cover the control of a brake system. Accordingly, claim 24 is allowable for the same reasons claim 15 was allowed in parent patent 6,109,241" (see Exhibit 6 hereto, at 3).

— The prosecution history of the "parent patent 6,109,241" exhibits the same pattern as the prosecution history of the '565 Patent: Teleflex originally filed claims reciting "an adjustable pedal assembly (22)" in combination with "an electronic throttle control attached to said support (18)" (see Exhibit 7 hereto, at 7); the claims, as originally filed, were declared unpatentable under 35 U.S.C. § 103(a) in view of Redding and prior art showing that "it would have been obvious at the time the invention was made to a person having ordinary skill in the art to provide the device of Redding with the electronic throttle control means attached to a support member" (see Exhibit 8 hereto); and once again, without disagreeing, at all, with the Examiner's reasoning or conclusions as to the obviousness and unpatentability of modifying Redding to include an off-the-shelf pedal position sensor, Teleflex amended what became Claim 15 of the parent '241 Patent to exclude the Redding design from its coverage through addition of the claim language, "wherein the position of said pivot (24) remains constant while said pedal arm (14) moves in fore and aft directions with respect to said pivot (24)" (see Exhibit 9 hereto, at 2).

— During the prosecution of the '565 Patent and its parent, Teleflex submitted three (3) separate Information Disclosure Statements ("IDS's") purporting to disclose prior art of which Teleflex and its patent counsel were aware (see

Exhibit 10 hereto). In not one of those statements did Teleflex disclose U.S. Patent No. 5,010,782 to Asano ("Asano") or U.S. Patent No. 5,722,302 to Rixon ("Rixon '302"), notwithstanding that (a) Teleflex's counsel admittedly was aware of both references at relevant times (KSR Main Br. at 22 & n.12); and (b) both references disclosed adjustable pedal assemblies whose pedal pivots did not move during pedal arm adjustment (see Willemsen Decl. ¶¶ 34-37 & Exs.11-12; Kruger Decl. ¶¶ 4-6, 25-30 & Ex. 1).[5]

Asano Combined With a Pedal Position Sensor

— Asano discloses each and every structure recited in claim 4 of the '565 Patent, with the exception of "an electronic control (28) attached to said support (18) for controlling a vehicle system" (see Exhibit 11 hereto; Willemsen Decl. ¶ 35 & Ex. 12; Kruger Decl. ¶ 5 & Ex. 1). Unlike the Redding reference described above, Asano (KSR Main Br. at 22 & Exs. 1, 6) discloses a position-adjustable pedal assembly (a) whose entire pedal arm (74) moves in

---

5. Rixon '302 issued on an application filed October 2, 1996, and unquestionably constituted prior art to the parent '241 Patent under 35 U.S.C. 102(e). Since the filing of KSR's Motion for Summary Judgment of Invalidity, Teleflex has produced documents (Third Dabney Decl. ¶ 12) which establish, clearly and convincingly, that the accelerator pedals embodying the Rixon '302 design were commercially offered for sale by no later than October 24, 1996, thus rendering that design prior art to the '565 Patent under 35 U.S.C. § 102(b). *See Pfaff v. Wells Elecs., Inc.*, 525 U.S. 55, 68-69 (1998) (offer of product for sale triggers application of 35 U.S.C. § 102(b)). Teleflex ironically cites and relies on Rixon '302 in its opposition (see Declaration of Timothy L. Andresen filed August 11, 2003, ¶ 4).

rectilinear, "fore and aft" directions along a guide member, and (b) whose pedal pivot (54) remains in a constant position while the pedal arm (74) moves in "fore and aft" directions with respect to the pivot (Kruger Decl. ¶ 5 & Ex. 1).[6]

— Conventional, off-the-shelf pedal position sensors that were on sale in the United States as of January 26, 1998, including CTS "503 Series" sensors, could have been attached to the accelerator pedal support bracket (50) disclosed in Figure 5 of Asano, for engagement with the disclosed accelerator pedal's pivot shaft (54), without materially altering the Asano pedal (Willemsen Decl. ¶ 36; Kruger Decl. ¶ 6 & Ex. 1).

— Submitted with KSR's Main Brief was a specimen CTS "503 Series" pedal position sensor of a type that was on sale in the United States prior to January 26, 1998 (Willemsen Decl. ¶¶ 18-19 & Exs. 9-10). The housing of the submitted CTS "503 Series" sensor includes two holes for mounting surface fasteners, such as screws (*id.*).

— CTS "503 Series" sensors are modular, completely enclosed units with openings designed to fit over and engage a vehicle pedal's pivot shaft (Willemsen Decl. ¶ 19 & Exs. 9-10). The modular design of CTS "503 Series" position sensors enables those sensors to be installed on different makes and models of vehicle accelerator pedal assemblies (Willemsen Decl. ¶ 19).

---

6. Unlike the design embodied in the accused GMT-360 and GMT-800 pedal systems manufactured by KSR, Asano discloses an adjustable pedal system comprising a guide member (52) and a pedal arm (74) that slides in its entirety along the guide member.

Appendix J

— As of January 26, 1998, CTS provided specifications identifying minimum requirements (for example, minimum surface requirements for attachment points) that any person of ordinary skill in the pedal design art could follow and use to design a pedal assembly that would actuate a CTS 503 Series sensor (Willemsen Decl. ¶ 21 & Ex. 9).

— The computer animation file named "Asano_565_claim_4.mpeg", submitted as part of Exhibit 1 to KSR's Main Brief, contains true and accurate representations of (a) the position-adjustable pedal disclosed in Figure 5 of Asano, (b) the accelerator pedal installed in certain 1994 GM pick-up trucks (the "1994 GM ETC Pedal"), and (c) how the modular, CTS "503 Series" position sensor attached to the support of the 1994 GM ETC Pedal could be similarly attached to the support of the Asano pedal (Kruger Decl. ¶¶ 4-6 & Ex. 1; Willemsen Decl. ¶¶ 35-37, 41 & Ex. 12).

— As of January 26, 1998, a person of "ordinary" skill in the art of the '565 Patent would have had a minimum of two (2) years of college level training in mechanical engineering and 2-3 years' work experience spanning at least one complete pedal design "cycle" (Willemsen Decl. ¶ 20).[7]

---

7. Plaintiff contends that a person of "ordinary" skill in the art of the '565 Patent would have even more education than KSR believes he or she would have (Pltf. Opp. Mem. at 12 n.9). For purposes of the present motion the Court may assume the correctness of plaintiff's position. Teleflex acknowledges that "[r]egardless of which definition this Court chooses to adopt, the obviousness analysis would remain substantially unaffected" (*id.*).

Appendix J

I. "OBVIOUSNESS" IS A QUESTION OF LAW, NOT A QUESTION OF FACT.

Teleflex asserts that summary judgment is inappropriate because "the true issue between the parties" supposedly is: "Whether *as a factual question*, the Engelgau Patent would have been obvious to one of ordinary skill in the art" (Pltf. Opp. Br. at 1; emphasis added).[8] In fact, as was set forth in KSR's Main Brief (KSR Main Br. at 19), "the ultimate question of patent validity is one of law." *Graham* v. *John Deere Co.*, 383 U.S. 1, 17 (1966). "[W]here the ultimate legal conclusion of obviousness is disputed, but not the underlying facts, there is no issue of fact requiring a trial, even though some facts favor obviousness, some nonobviousness." *Newell Co.* v. *Kenney Mfg. Co.*, 864 F.2d 757, 763 (Fed. Cir. 1988), *cert. denied*, 493 U.S. 814 (1989).

Here there is no dispute as to any of the facts put forward by KSR in support of its Motion for Summary Judgment of Invalidity, as summarized above.[9] Rather, the question raised

---

8. As described infra, besides erroneously asserting that "obviousness" is "a factual question," Teleflex's opposition is also erroneous in its focus on the "Engelgau Patent," (Pltf. Opp. Br. at 6), rather that on the subject matter recited in asserted Claim 4 of the '565 Patent.

9. In view of Teleflex's failure to controvert any of the factual predicates put forward by KSR in support of summary judgment, Teleflex's discussion of the "burden of proof" (Pltf. Opp. Br. at 5-6) is beside the point. Regardless of how much proof constitutes "clear

(Cont'd)

to the Court is purely one of law, namely, whether "the differences between the subject matter sought to be patented and the prior art are such that the subject matter as a whole would have been obvious at the time the invention was made to a person having ordinary skill in the art to which said subject matter pertains." 35 U.S.C. § 103(a). It is well-settled that "a district court can properly grant, as a matter of law, a motion for summary judgment on patent invalidity when the factual inquiries into obviousness present no genuine issue of material facts." *Ryko Mfg. Co.* v. *Nu-Star, Inc.*, 950 F.2d 714, 716 (Fed. Cir. 1991).

It is equally well-settled that "[o]pinion testimony by experts concluding that an invention would or would not have been obvious . . . raise no issue of fact." *Peterson Mfg. Co.* v. *Central Purchasing, Inc.*, 740 F.2d 1541, 1548 (Fed. Cir. 1984) (affirming summary judgment of invalidity under 35 U.S.C. § 103). *Accord Avia Group Int'l, Inc.* v. *L.A. Gear Cal., Inc.*, 853 F.2d 1557, 1562-64 (Fed. Cir. 1988) ("a conflict in the legal opinions of experts creates no dispute of fact"). It is, thus, no bar to summary judgment that Teleflex has found two experts who apparently are prepared to say, in conclusory fashion, that "the Engelgau Patent involved a combination of elements that would not have been obvious

---

(Cont'd)
and convincing evidence" of a factual contention, KSR's factual contentions here — e.g., the disclosure of Asano — are totally undisputed. In such circumstances, "the entire question of obviousness is one for the court." *Badalamenti v. Dunham's, Inc.*, 680 F. Supp. 256, 259 (E.D. Mich.) (Feikens, J.), *aff'd mem.*, 862 F.2d 322 (Fed. Cir. 1988). *See Structural Rubber Prods., Inc. v. Park Rubber Co.*, 749 F.2d 707, 721 (Fed. Cir. 1984).

to one of ordinary skill in the art" (Pltf. Opp. Br. at 12-13). "That the parties fervently dispute the ultimate conclusion of obviousness is not enough to raise a factual question." *Structural Rubber Prods., Inc.* v. *Park Rubber Co.*,749 F.2d 707, 721 (Fed. Cir. 1984).

"Whether a reference or a combination of references renders a claimed invention obvious under 35 U.S.C. § 103 is a question of law subject to full and independent review in this court." *In re GPAC Inc.*, 57 F.3d 1573, 1577 (Fed. Cir. 1995). KSR's motion calls upon the Court to determine that the combination of (a) Asano and (b) an off-the-shelf pedal position sensor, such as the CTS "503 Series" sensor, renders the subject matter of asserted claim 4 of the '565 Patent unpatentable as a matter of law, just as the Patent Office earlier ruled that the similar combination of Redding and Smith, described above, was unpatentable under 35 U.S.C. § 103(a) (*see* Exhibits 3-5 hereto). "[W]here the only issue is, as here, the application of the statutory standard of obviousness (35 U.S.C. § 103) to an established set of facts, there is only a question of law to be resolved by the trial judge." *Newell*, 864 F.2d at 762.

II. "OBVIOUSNESS" MUST BE DETERMINED BY REFERENCE TO SUBJECT MATTER RECITED IN AN ASSERTED CLAIM, NOT BY REFERENCE TO SUBJECT MATTER "DEPICTED" IN A PATENT.

On the legal question of validity, the entire thrust of Teleflex's opposition to summary judgment is misdirected and erroneous, for it focuses on "the design *depicted* in the

Engelgau Patent" (Plft. Opp. Br. at 6; emphasis added), rather than "the subject matter sought to be patented," 35 U.S.C. § 103(a), that is, the subject matter recited in asserted Claim 4 of the '565 Patent.

In writing Claim 4 of the '565 Patent, Teleflex's patent counsel chose to describe the alleged "invention" in terms (e.g., "an adjustable pedal assembly (22) having a pedal arm (14) moveable in fore and aft directions") that omitted any description of the physical characteristics and arrangement of the structures depicted in the drawings of the '565 Patent.[10] Far from limiting asserted Claim 4 to the "design depicted in the Engelgau Patent" (Pltf. Opp. Br. at 6), the '565 Patent specification actually states that "[t]he adjustable pedal assembly 22 can be any of various adjustable pedal assemblies known in the art" ('565 Patent at col. 2, lines 55-56; *see* KSR Main Br. & Ex. 5). It is that sweeping

---

10. As KSR has elsewhere argued (see Brief in Opposition to Plaintiff's Two Motions for Summary Judgment of Infringement filed July 28, 2003, at 28-29), besides being invalid under 35 U.S.C. § 103, asserted claim 4 of the '565 Patent represents a classic violation of "the doctrine that a patentee may not broaden his product claims by describing the product in terms of function." *General Elec. Co. v. Wabash Co.*, 304 U.S. 364, 371 (1938). Accord *United Carbon Co. v. Binney & Smith Co.*, 317 U.S. 228, 243 (1942); *Holland Furniture Co. v. Perkins Glue Co.*, 277 U.S. 245, 257 (1928). It was only by describing Mr. Engelgau's alleged "invention" in terms of its "function", and omitting reference to the physical structures comprising the "invention", that Teleflex could even argue that KSR was making or selling pedal systems embodying that alleged "invention". This is a separate and independent ground for awarding summary judgment to KSR.

claim — not the "design depicted in the Engelgau Patent" — that the Court must evaluate for validity under 35 U.S.C. § 103(a), in view of (a) Asano and (b) electronic pedal position sensors, such as the CTS "503 Series" sensor, that were specifically designed to be attached to vehicle pedal's pivot and support bracket (e.g., KSR Main Br. at 25 & Ex. 10), such as the pivot (54) and support bracket (50) disclosed in Figure 5 of Asano (KSR Main Br. at 22 & Ex. 6).

III. TELEFLEX ERRONEOUSLY RELIES ON ALLEGED "DIFFERENCES" THAT DO NOT EXIST IN ASSERTED CLAIM 4 OF THE '565 PATENT.

Teleflex does not dispute that Asano, in combination with an off-the-shelf pedal position sensor, meets each and every limitation of asserted claim 4 of the '565 Patent (Willemsen Decl. ¶ 35 & Ex. 12; Kruger Decl. ¶ 5 & Ex. 1). Teleflex also does not dispute that combining Asano with an off-the-shelf position sensor would have been obvious to a person of ordinary skill in the art of the '565 Patent, just as the Patent Office ruled that combining Redding with such a sensor would have been unpatentably obvious during prosecution of the 2565 Patent (see Exhibits 3-5 and 8 hereto), a ruling that Teleflex repeatedly acquiesced in (*see* Exhibits 6, 9 hereto).

Yet according to Teleflex, summary judgment should be denied because "combining Asano with an electronic control would not have solved any of the problems confronting Engelgau in his design of the Engelgau Patent" (Pltf. Opp. Br. at 15). This is so, Teleflex argues, because "someone in Engelgau's shoes, who was trying to create an adjustable pedal assembly with an attached electronic control *that was easy to package in a narrow space and was also relatively*

simple and inexpensive, would shun Asano" (Pltf. Opp. Br. at 20; emphasis added).

Teleflex's argument is erroneous at several levels. In the first place, Teleflex's argument simply ignores the language of asserted claim 4 of the '565 Patent. Claim 4 of the '565 Patent is not limited to adjustable pedal assemblies that are "inexpensive", "more easily assembled", or "more conveniently packaged" (Pltf. Opp. Br. at 11, 18). Claim 4 of the '565 Patent similarly does not exclude adjustable pedal assemblies that are "complicated," "expensive", "time consuming to assemble", or "require a significant amount of packaging space" (*id.* at 11, 19). Even assuming, for purposes of argument, that differences of this sort existed between the design disclosed in Asano and "the design depicted in the Engelgau Patent" (*id.* at 6), those alleged differences cannot be relied on to withstand summary judgment, for Teleflex's assignor(s) included no such limitations in asserted claim 4 of the '565 Patent. *E.g.*, *Graver Tank & Mfg. Co.* v. *Linde Air Prods. Co.*, 336 U.S. 271, 277 (1949); *E.I. Du Pont de Nemours & Co.*, 849 F.2d 1430, 1433-34 (Fed. Cir.), *cert. denied*, 498 U.S. 986 (1988).[11]

---

11. As noted above, Teleflex and THC produced documents on July 29, 2003, demonstrating that the accelerator pedal described in Rixon '302 constitutes prior art to the '565 Patent (Third Dabney Decl. ¶ 12). The mechanical configuration of the accelerator pedal disclosed in Rixon '302 is virtually identical to that disclosed in the '565 Patent. *See* Kruger Decl. ¶¶ 28-30 & Ex. 1. Thus even assuming, for purposes of argument, that there were any relevance to unclaimed "differences" between Asano and the subject matter recited in claim 4 of the '565 Patent, no such differences exist with respect to Rixon '302.

For similar reasons, Teleflex's assertion, "combining Asano with an electronic control would not have solved any of the problems confronting Engelgau in his design of the Engelgau Patent" (Pltf. Opp. Br. at 15), is legally irrelevant, for asserted Claim 4 of the '565 Patent "reads on" precisely that combination (see Exhibit 11 hereto; Kruger Decl. ¶ 5 & Ex. 1; Willemsen Decl. ¶ 35 & x. 12). Furthermore, the standard of patentability under 35 U.S.C. § 103(a) is not what would have been obvious to Mr. Engelgau (Pltf. Opp. Mem. at 18), but what would have been obvious to "the hypothetical person of ordinary skill in the art who is charged with knowledge of all the contents of the relevant prior art." *In re Carlson*, 983 F.2d 1032, 1037-38 (Fed. Cir. 1992).

Where, as here, "the references are all in the same or analogous fields, knowledge thereof by the hypothetical person of ordinary skill is presumed." *In re Katz*, 933 F.2d 982, 986 (Fed. Cir. 1991). Teleflex's assertion that a person of ordinary skill in the art of the '565 Patent, seeking to develop the subject matter recited in Claim 4 of that patent, would have "shunned Asano" (Pltf. Opp. Br. at 20) is thus erroneous as a matter of law.

IV. TELEFLEX IGNORES PRIOR ART TEACHING THE PLACEMENT OF PEDAL POSITION SENSORS ON PEDAL SUPPORT BRACKETS.

Teleflex's assertion that "[t]he Engelgau Patent provided a feature previously unavailable, specifically, an electronic throttle control attached to the support for controlling an engine throttle" (Pltf. Opp. Br. at 18), as distinguished from being "attached to the pedal itself" (*id.* at 11), is unsupported

and contrary to the record. In fact, during the prosecution of the '565 Patent and its parent, Teleflex *acquiesced* in the Patent Office's conclusion that "the use of an electronic throttle control means (28) *attached to a support member* (40, 26) in a pedal assembly is old and well-known in the art" (see Exhibit 3 hereto, at 2; emphasis added). *Cf. Deere*, 383 U.S. at 34-35 (holding patent invalid where allegedly novel feature was disclosed in prior art).

The prior art further and expressly teaches the preferability of pedal position sensors being mounted adjacent to, and engaged with, an accelerator pedal's *pivot shaft*, regardless of where such a pivot shaft might be located (Willemsen Decl. ¶¶ 13-21 & Exs. 8-10; KSR Main Br. at 23-27). The optional position sensor (42) disclosed in the '565 Patent *follows* this teaching. Teleflex's assertion that "[t]he novelty of the Engelgau Patent stems from the decision to separate the pedal from the electronic control" (Pltf. Opp. Br. at 11) flies in the face of the '565 Patent itself: the optional position sensor (42) disclosed in the '565 Patent is engaged with the pivot shaft (54) of the disclosed position-adjustable pedal assembly (22), in precisely the same way as is shown in the prior art (KSR Main Br. at 25 & Exs. 9-10).

The prosecution history of the '565 Patent also belies Teleflex's speculation (Pltf. Opp. Mem. at 20) that the Examiner of the '565 Patent application supposedly recognized the invalidity arguments put forward by KSR herein, and supposedly formed a legal conclusion as to the patentability of claim 4 of the '565 Patent notwithstanding those arguments. As described at pp. 3-7 above, Teleflex procured allowance of claim 4 of the '565 Patent by (a) filing

an amendment to its original claims that the added limitation, "wherein the position of said pivot (24) remains constant while said pedal arm (14) moves in fore and aft directions with respect to said support" (*compare* Exhibit 2 hereto *with* Exhibit 6 hereto), and then (b) arguing that *with this limitation*, the subject matter of Claim 4 allegedly was patentably distinct from the prior art. Teleflex's prosecution amendment and argument are flatly inconsistent with its theory, put forward for the first time in opposition to summary judgment, that the "non-moving pivot" limitation added by the amendment was known to exist in a *brake* pedal system disclosed in U.S. Patent No. 5,632,183 to Rixon (Pltf. Opp. Br. at 20).

At all events, "[a] patent, in the last analysis, simply represents a legal conclusion reached by the Patent Office", typically "in an *ex parte* proceeding, without the aid of the arguments which could be advanced by parties interested in proving patent invalidity." *Lear, Inc.* v. *Adkins*, 395 U.S. 653, 670 (1969). Such legal conclusions are not binding on this Court, and indeed are not even subject to "deference" on direct appeal from determinations of the Patent Office in *inter partes* proceedings. *See In re Baker Hughes, Inc.*, 215 F.3d 1297, 1300 (Fed. Cir. 2000). Whatever unarticulated legal reason(s) may have lain behind the Examiner's allowance of '565 Patent claim 4 following his receipt of an argument that Teleflex now attempts to disavow, those unknown and unknowable reason(s) have no bearing on KSR's motion. *Cf. Celeritas Techs. Ltd.* v. *Rockwell Int'l Co.*, 150 F.3d 1354, 1360-61 (Fed. Cir. 1998), *cert. denied*, 525 U.S. 1106 (1999) (patent held invalid over reference that had been disclosed to Patent Office).

Teleflex's opposition also ignores a legion of Supreme Court decisions holding that "[t]he mere aggregation of a number of old parts or elements, which, in the aggregation, perform or produce no new or different function or operation than that theretofore performed or produced by them, is not patentable invention." *Great Atl. & Pac. Tea Co.* v. *Supermarket Equip. Corp.*, 340 U.S. 147, 152 (1950).[12] Here it is undisputed that asserted claim 4 of the '565 Patent, as written, merely "unite[s] old elements with no change in their respective functions," *Sakraida* v. *Ag Pro, Inc.*, 425 U.S. 273, 281 (1976) (quoting *Great Atl.*, 340 U.S. at 152), and thus clearly fails "the test of validity of combination patents." *Sakraida*, 425 U.S. at 282 (quoting *Anderson's-Black Rock, Inc.* v. *Pavement Salvage Co.*, 396 U.S. 57, 60 (1969)). This is a separate and independent ground for awarding summary judgment to KSR.

---

12. *Accord Sakraida v. Ag Pro, Inc.*, 425 U.S. 273, 281-82 (1976); *Anderson's-Black Rock, Inc. v. Pavement Salvage Co.*, 396 U.S. 57, 60 (1969); *Toledo Pressed Steel Co. v. Standard Parts, Inc.*, 307 U.S. 350, 355-56 (1939); *Lincoln Engineering Co. v. Stewart-Warner Corp.*, 303 U.S. 545, 549 (1938); *Altoona Publix Theatres, Inc. v. American Tri-Ergon Corp.*, 294 U.S. 477, 486 (1935); *Pickering v. McCullough*, 104 U.S. 310, 318 (1881); *Reckendorfer v. Faber*, 92 U.S. 347, 356-57 (1875); *Hailes v. Van Wormer*, 87 U.S. (20 Wall.) 353, 368 (1873). Teleflex's assertion that "Courts traditionally have been skeptical of" invalidity challenges based on obviousness (Pltf. Opp. Mem. at 7) is unsupported and insupportable. The Supreme Court has "observed a notorious difference between the standards applied by the Patent Office and by the courts." *Graham v. John Deere Co.*, 383 U.S. 1, 18 (1966) (holding two patents invalid under 35 U.S.C. § 103).

Appendix J

V. SECONDARY FACTORS

As its final ground of opposition, Teleflex relies on an Affidavit of Charles Meier ("Meier Aff.") stating that "[t]he adjustable pedal assembly design referenced in the Engelgau patent (U.S. Patent No. 6,237,565) has been placed in Ford's U-137/P131 program," and "Teleflex has shipped approximately 150,000 adjustable pedal units to Ford for the U-137/P-131 program." These facts, even if accepted at face value, are clearly insufficient "to override a determination of obviousness based on primary considerations." *Ryko*, 950 F.2d at 719 (affirming award of summary judgment under 35 U.S.C. § 103(a), notwithstanding that "secondary consideration weighted in favor of" the patentee).

In the first place, the '565 Patent describes two embodiments of a vehicle control pedal apparatus, one comprising a "cable attachment member 78" for actuating an engine throttle cable, and second comprising an optional "electronic throttle control 28". The embodiment comprising a "cable attachment member 78" is *not* protected by '565 Patent claim 4. Teleflex has presented no evidence identifying its sales of pedal systems embodying the subject matter of asserted claim 4, as distinct from cable-actuated accelerator pedal assemblies that are described but not claimed in the '565 Patent.[13]

---

13. Teleflex's failure to claim the cable-actuating version of the pedal system described in the '565 Patent demonstrates, in dramatic fashion, that the purported "invention" of Mr. Engelgau consisted of nothing more than adding an off-the-shelf pedal position sensor to an otherwise old and (in 1999) clearly unpatentable design.

Equally important, "secondary" considerations such as "commercial success" are "relevant only in a close case where all other proof leaves the question of invention in doubt." *Dow Chem. Co.* v. *Halliburton Oil Well Cementing Co.*, 324 U.S. 320, 330 (1945). This is not such a case. *Cf. Sakraida*, 425 U.S. at 282-83 (holding patent invalid under 35 U.S.C. § 103(a) notwithstanding "commercial success" of alleged "inventions"); *Anderson's-Black Rock*, 396 U.S. at 60 (same).

CONCLUSION

For the reasons set forth above and in KSR's Main Brief, the Court should grant summary judgment dismissing the sole surviving claim of the Complaint.

Dated: August 26, 2003

Respectfully submitted,
DICKINSON WRIGHT PLLC

By _____

Kenneth J. McIntyre (P17450)
Attorneys for Defendant
500 Woodward Avenue, Suite 4000
Detroit, MI 48226-3425
(313) 223-3500

JAMES W. DABNEY
Pennie & Edmonds LLP
Attorneys for Defendant
1155 Avenue of the Americas
New York, NY 10036
(212) 790-9090

Appendix J

Exhibit	Supplemental Joint Appendix page
1	244
2	247
3	250
4	254
5	268
6	279
7	284
8	288
9	293
10	298

APPENDIX K — THIRD DECLARATION OF JAMES W. DABNEY DATED AUGUST 25, 2003 AND FILED AUGUST 26, 2003

UNITED STATES DISTRICT COURT
EASTERN DISTRICT OF MICHIGAN
SOUTHERN DIVISION

Case No: 02-74586

TELEFLEX INCORPORATED,

Plaintiff,

vs.

KSR INTERNATIONAL CO.,

Defendant.

THIRD DECLARATION OF JAMES W. DABNEY

1. My name is James W. Dabney. I am a member of the Bar of the States of New York and New Jersey and of the firm of Pennie & Edmonds LLP, co-counsel for defendant KSR International Company ("KSR") in this action. I make this declaration in further support of KSR's Motion for Summary Judgment of Invalidity filed July 7, 2003. I have personal knowledge to the matters stated in this declaration.

2. Exhibit 1 to the accompanying Reply Brief in Support of Defendant's Motion for Invalidity ("Defendant's Reply Brief") is a Stipulation and Order for Dismissal With

Prejudice of Claims II and III of Teleflex's Second Amended Complaint in this action.

3. Exhibit 2 to Defendant's Reply Brief is a Preliminary Amendment dated August 22, 2000, that was filed in support of U.S. Application No. 09/643,422 (the "'422 Application"), which application matured into U.S. Patent No. 6,237,565 B1 (the "'565 Patent").

4. Exhibit 3 to Defendant's Reply Brief is an Office Action dated November 6, 2000, that was issued with respect to the '422 Application.

5. Exhibit 4 to Defendant's Reply Brief is a copy of U.S. Patent No. 5,460,061 to Redding ("Redding"), which reference was cited in Exhibit 3 hereto.

6. Exhibit 5 to Defendant's Reply Brief is a true copy of U.S. Patent No. 5,063,811 to Smith ("Smith"), which reference was cited in Exhibit 3 hereto.

7. Exhibit 6 to Defendant's Reply Brief is an Amendment dated January 29, 2001, that was filed in support of the '422 Application.

8. Exhibit 7 to Defendant's Reply Brief are excerpts from U.S. Application No. 09/236,975 filed January 26, 1999 (the "'975 Application"), which application matured into U.S. Patent No. 6,109,241 (the "'241 Patent"), commonly referred to as the "parent" of the '565 Patent.

9. Exhibit 8 to Defendant's Reply Brief is an Office Action dated December 10, 1999, that was issued with respect to the '975 Application.

10. Exhibit 9 to Defendant's Reply Brief is an Amendment dated March 22, 2000, that was filed in support of the '975 Application.

11. Exhibit 10 to Defendant's Reply Brief comprises true copies of three (3) Information Disclosure Statements that were filed in support of the '422 Application and the '975 Application.

12. Attached to this declaration are copies of documents that counsel for plaintiff produced on July 29, 2003.

I, JAMES W. DABNEY, hereby declare under penalty of perjury under the laws of the United States that the foregoing is true and correct.

Dated: August 25, 2003

_____

James W. Dabney

Appendix K

Exhibit	Supplemental Joint Appendix page
Attachments	304

710

Supreme Court, U.S.
FILED
AUG 22 2006
OFFICE OF THE CLERK

No. 04-1350

IN THE

Supreme Court of the United States

KSR INTERNATIONAL CO.,

Petitioner,

—against—

TELEFLEX INC. and
TECHNOLOGY HOLDING CO.,

Respondents.

ON WRIT OF CERTIORARI TO THE UNITED STATES COURT OF APPEALS FOR THE FEDERAL CIRCUIT

BRIEF FOR PETITIONER

JAMES W. DABNEY
Counsel of Record
1 New York Plaza
New York, New York 10004
(212) 859-8000

STEPHEN S. RABINOWITZ
HENRY C. LEBOWITZ
MITCHELL E. EPNER
DARCY M. GODDARD
FRIED, FRANK, HARRIS,
SHRIVER & JACOBSON LLP
New York, New York 10004

JOHN F. DUFFY
FRIED, FRANK, HARRIS,
SHRIVER & JACOBSON LLP
Washington, DC 20004
Of Counsel

Attorneys for Petitioner

August 22, 2006

203033

COUNSEL PRESS
(800) 274-3321 • (800) 359-6859

QUESTION PRESENTED

Whether the Federal Circuit has erred in holding that a claimed invention cannot be held "obvious," and thus unpatentable under 35 U.S.C. § 103(a), in the absence of some proven "'teaching, suggestion, or motivation' that would have led a person of ordinary skill in the art to combine the relevant prior art teachings in the manner claimed."

CORPORATE DISCLOSURE STATEMENT

Petitioner hereby identifies KSR Industrial Corp. as a parent corporation owning 10% or more of Petitioner's stock. No publicly held company owns 10% or more of the stock of Petitioner.

TABLE OF CONTENTS

Page(s)

QUESTION PRESENTED ..... *i*

CORPORATE DISCLOSURE STATEMENT ..... *ii*

TABLE OF CONTENTS ..... *iii*

TABLE OF AUTHORITIES ..... *iv*

OPINIONS BELOW 1

JURISDICTION 1

STATUTORY PROVISIONS INVOLVED 1

STATEMENT OF THE CASE 1

A. Statutory and Case Law Background 2

B. Factual Background 6

1. The Technology at Issue 6

2. Adjustable Pedals 6

3. The Transition to Electronically-Controlled Fuel Systems 7

4. The Engelgau patent 8

C. The Proceedings Below 9

1. The Respondents' Infringement Action 9

2. The District Court's Decision 11

3. The Federal Circuit's Decision 14

SUMMARY OF THE ARGUMENT 16

ARGUMENT 17

I. THE TEACHING-SUGGESTION-MOTIVATION TEST HAS NO BASIS IN THE TEXT OF SECTION 103 AND CONFLICTS WITH THIS COURT'S PRECEDENTS. 17

A. The Teaching-Suggestion-Motivation Test Is Inconsistent With This Court's Precedents 20

B. The Teaching-Suggestion-Motivation Test Is Built on a Rejection of This Court's Precedents 20

C. The Teaching-Suggestion-Motivation Test Effectively Guts § 103(a) as a Meaningful Defense to Liability for Alleged Patent Infringement 20

1. The Teaching-Suggestion-Motivation Test Effectively Precludes Use of Summary Judgment and Strips Courts of Authority to Determine the Ultimate Question of Patent Validity. 20

2. The Teaching-Suggestion-Motivation Test Converts § 103(a) Into a Condition for Challenges to Patentability 20

D. Under This Court's Precedents Claim 4 of the Engelgau Patent Is Invalid. 43

II. THE COURT SHOULD ADHERE TO ITS PRECEDENTS AND REJECT THE TEACHING-SUGGESTION-MOTIVATION TEST. 43

A. The Teaching-Suggestion-Motivation Test Ill Serves the Important Goals That § 103(a) Is Designed to Implement.. 44

B. The Federal Circuit's Doctrine Is a Failed Experiment.... 49

CONCLUSION 50

TABLE OF AUTHORITIES

CASES

Page(s)

ACS Hospital Systems, Inc. v. Montefiore Hospital, 732 F.2d 1572 (Fed. Cir. 1984) 28

Adams v. Bellaire Stamping Co., 141 U.S. 539 (1891) 22

Ag Pro, Inc. v. Sakraida, 474 F.2d 167 (5th Cir. 1973) 24, 40

Anderson's-Black Rock, Inc. v. Pavement Salvage Co., 396 U.S. 57 (1969) ..... *passim*

Ashland Oil v. Delta Resins & Refractories, 776 F.2d 281 (Fed. Cir. 1985) 28

Atlantic Works v. Brady, 107 U.S. 192 (1883) 6

Blonder-Tongue Laboratories, Inc. v. University of Illinois Foundation, 402 U.S. 313 (1971) 34

Bonito Boats, Inc. v. Thunder Craft Boats, Inc., 489 U.S. 141 (1989) 26

Brinkerhoff v. Aloe, 146 U.S. 515 (1892) 20

Calmar, Inc. v. Cook Chemical Co., 336 F.2d 110 (8th Cir. 1964) 21

Carnegie Steel Co. v. Cambria Iron Co., 185 U.S. 403 (1902) 19

Page(s)

Celotex Corp. v. Catrett, 477 U.S. 317 (1986) 32

Columbia Motor Car Co. v. C. A. Duerr & Co.,
184 F. 893 (2d Cir. 1911) 49

Concrete Appliances Co. v. Gomery,
269 U.S. 177 (1925) 19

Connell v. Sears, Roebuck & Co.,
722 F.2d 1542 (Fed. Cir. 1983) 10

Corning v. Burden,
516 U.S. (15 How.) 252 (1854) 25

Dann v. Johnston, 425 U.S. 219 (1976) ..... *passim*

De Forest Radio Co. v. General Electric Co.,
283 U.S. 664 (1931) 3, 18

Diamond v. Diehr, 450 U.S. 175 (1981) 25

*Diamond Rubber Co. v. Consolidated Rubber
Tire Co.*, 220 U.S. 428 (1911) 19, 26

Dickinson v. Zurko, 527 U.S. 150 (1999) 5, 44

*Dow Chemical Co. v. Halliburton Oil Well
Cementing Co.*, 324 U.S. 320 (1945) 27, 39

eBay, Inc. v. MercExchange L.L.C.,
126 S. Ct. 1837 (2006) 42

*Eibel Process Co. v. Minnesota & Ontario Paper
Co.*, 261 U.S. 45 (1923) 3, 19

Page(s)

Essex Razor Blade Corp. v. Gillette Safety Razor Co., 299 U.S. 94 (1936) 18

Expanded Metal Co. v. Bradford, 214 U.S. 366 (1909) 18

Feist Publication, Inc. v. Rural Telephone Service Co., 499 U.S. 340 (1991) 45

Festo Corp. v. Shoketsu Kinzoku Kogyo Kabushiki Co., 535 U.S. 722 (2002) 8

Florscheim v. Schilling, 137 U.S. 641 (1890) 22

Fromson v. Advance Offset Plate, 755 F.2d 1549 (Fed. Cir. 1985) 29

Gardner v. TEC Systems, Inc., 725 F.2d 1338 (Fed. Cir. 1984) 30

Goodyear Tire & Rubber Co. v. Ray-O-Vac Co., 321 U.S. 275 (1944) 3, 18, 39

Graham v. John Deere Co., 383 U.S. 1 (1966) ..... *passim*

Graver Tank & Manufacturing Co. v. Linde Air Products Co., 336 U.S. 271 (1949) 9

Great Atlantic & Pacific Tea Co. v. Supermarket Equipment Corp., 340 U.S. 147 (1950) ..... *passim*

Grinnell Washing Machine Co. v. E.E. Johnson Co., 247 U.S. 426 (1918) 19, 22

Page(s)

Group One Ltd. v. Hallmark Cards, Inc.,
407 F.3d 1297 (Fed. Cir. 2005) 6, 36, 35

Herman & McClean v. Huddleston,
459 U.S. 375 (1983) 11

Holmes Group, Inc. v. Vornado Air Circulation System, Inc., 535 U.S. 826 (2002) 5, 31

Hotchkiss v. Greenwood,
52 U.S. (11 How.) 248 (1851) ..... *passim*

IBP, Inc. v. Alvarez, 126 S. Ct. 514 (2006) 43

Interconnect Planning Corp. v. Feil,
774 F.2d 1132 (Fed. Cir. 1985) 29

In re Johnston, 502 F.2d 765 (C.C.P.A. 1974) 23, 28

In re Dembiczak, 175 F.3d 994 (Fed. Cir. 1999) 46

In re Kahn, 441 F.3d 977 (Fed. Cir. 2006) 30

In re Lee, 277 F.3d 1338 (Fed. Cir. 2002) 41

In re Rouffet, 149 F.3d 1350 (Fed. Cir. 1998) 11, 34

Jungersen v. Ostby & Barton Co.,
335 U.S. 560 (1949) 39

Keystone Driller Co. v. Northwest Engineering Corp., 294 U.S. 42 (1935) 18

Keystone Manufacturing Co. v. Adams,
151 U.S. 139 (1894) 19

Page(s)

Knapp v. Morss, 150 U.S. 221 (1893) 19, 22, 25

Lear, Inc. v. Adkins, 395 U.S. 653 (1969) 35

Lincoln Engineering Co. v. Stewart-Warner Corp.,
303 U.S. 545 (1938) ..... *passim*

Mandel Brothers, Inc. v. Wallace,
335 U.S. 291 (1948) 18, 27

Markman v. Westview Instruments, Inc.,
517 U.S. 370 (1996) 8, 25, 37

Mast, Foos & Co. v. Stover Manufacturing Co.,
177 U.S. 485 (1900) 12, 19

McClain v. Ortmayer, 141 U.S. 419 (1891) 20, 40, 41

McGinley v. Franklin Sports, Inc.,
262 F.3d 1339 (Fed. Cir. 2001) 37

MercExchange, L.L.C. v. eBay, Inc.,
401 F.3d 1323 (Fed. Cir. 2005),
rev'd, 126 S. Ct. 1837 (2006) 37

Medtronic, Inc. v. Cardiac Pacemakers, Inc.,
721 F.2d 1563 (Fed. Cir. 1983) 5, 27, 29

Merck & Co. v. Biocraft Laboratories, Inc.,
874 F.2d 804 (Fed. Cir. 1989) 29

NTP, Inc. v. Research in Motion, Ltd.,
418 F.3d 1282 (Fed. Cir. 2005),
cert. denied, 126 S. Ct. 1174 (2006) 42

Page(s)

Office Specialty Manufacturing Co. v. Fenton Metallic Manufacturing Co., 174 U.S. 492 (1899) 19

Paramount Publix Corp. v. American Tri-Ergon Corp., 294 U.S. 464 (1935) 18

Perkin-Elmer Corp. v. Computervision Corp., 732 F.2d 888 (Fed. Cir. 1984) 18

Pfaff v. Wells Electrics, Inc., 525 U.S. 55 (1998) 8

Powers-Kennedy Contracting Corp. v. Concrete Mixing & Conveying Co., 282 U.S. 175 (1930) 22

Railroad Dynamics, Inc. v. A. Stucki Co., 727 F.2d 1506 (Fed. Cir. 1984) 17

Railroad Supply Co. v. Elyria Iron & Steel Co., 244 U.S. 285 (1917) 12, 17

Richards v. Chase Elevator Co., 158 U.S. 299 (1895) 22

Sakraida v. Ag Pro, Inc., 425 U.S. 273 (1976) ..... *passim*

Saranac Automatic Machine Corp.v. Wirebounds Patents Co., 282 U.S. 704 (1931) 18

Sarkisian v. Winn-Proof Corp., 688 F.2d 647 (9th Cir. 1982) 18

Sharp v. Stamping Co., 103 U.S. 250 (1880) 20

Page(s)

Sinclair & Carroll Co. v. Interchemical Corp., 325 U.S. 327 (1945) 19, 27

Standard Brands, Inc. v. National Green Yeast Corp., 308 U.S. 34 (1939) 18

State St. Bank & Trust Co. v. Signature Finance Group, 149 F.3d 1368 (Fed. Cir. 1998) 30

Stratoflex, Inc. v. Aeroquip Corp., 713 F.2d 1530 (Fed. Cir. 1983) 5, 27

Teleflex Inc. v. KSR International Co., 298 F. Supp. 2d 581 (E.D. Mich. 2003) ..... *passim*

Temco Electric Motor Co. v. Apco Manufacturing Co., 275 U.S. 319 (1928) 18

The Telephone Cases, 126 U.S. 1 (1888) 45, 47

Toledo Pressed Steel Co. v. Standard Parts, Inc., 307 U.S. 350 (1939) 22, 37

United States v. Adams, 383 U.S. 39 (1966) 18, 21, 38, 39

Warner-Jenkinson Company, Inc. v. Hilton Davis Chemical Co., 520 U.S. 17 (1997) 44

CONSTITUTIONAL PROVISIONS

U.S. Const. art. I, § 8, cl. 8 2

Page(s)

FEDERAL STATUTES

28 U.S.C. § 1254 1

35 U.S.C. §§ 1-376 2

35 U.S.C. § 101 ..... 2, 8

35 U.S.C. § 103 ..... *passim*

35 U.S.C. § 112 8

35 U.S.C. § 131 34

35 U.S.C. § 271 9

35 U.S.C.§ 282 ..... 1, 9, 10

FEDERAL RULES

Fed. R. Civ. P. 1 34

Fed. R. Civ. P. 50(b) 36, 39

SECONDARY AUTHORITY

Martin J. Adelman, Randall R. Rader, John R. Thomas & Harold C. Wegner, CASES AND MATERIALS ON PATENT LAW (2d ed. 2003) 30

Freidrich-Karl Beier, *The Inventive Step in its Historical Development*, 17 Int'l Rev. Indus. Prop. & Copyright L. (IIC) (1986) 50

Page(s)

Philippe Ducor, *Recombinant Products and Nonobviousness: A Typology*, 13 Santa Clara Computer & High Tech. L. J. 1 (1997) 31

John F. Duffy, *Rethinking the Prospect Theory of Patents*, 71 U. Chi. L. Rev. 439 (2004) 48

James J. Flink, THE AUTOMOBILE AGE (1988) 47

Paul Goldstein, COPYRIGHT, PATENT, TRADEMARK AND RELATED STATE DOCTRINES (2002) 31

William Greenleaf, MONOPOLY ON WHEELS: HENRY FORD AND THE SELDON AUTOMOBILE PATENT (1961) 48

Paul M. Janicke, *The Federal Circuit and Antitrust: To Be or Not to Be: The Long Gestation of the U.S. Court of Appeals for the Federal Circuit (1887-1982)*, 69 Antitrust L.J. 645 (2002) 30

William M. Landes & Richard A. Posner, THE ECONOMIC STRUCTURE OF INTELLECTUAL PROPERTY LAW (Harvard 2003) 48

E. Lipscomb, WALKER ON PATENTS (3d ed. 1985) 8, 25

Robert P. Merges & John F. Duffy, PATENT LAW AND POLICY (3d ed. 2002) 46, 47, 48

1 M. Nimmer & D. Nimmer, NIMMER ON COPYRIGHT (1990) 45

Patently Absurd, Wall St. J., Mar. 1, 2006, at C-1 49-50

Page(s)

Patently Ridiculous, N.Y. Times, Mar. 22, 2006 49

A. Samuel Oddi, *Beyond Obviousness: Invention Protection in the Twenty-First Century*, 38 Am. U. L. Rev. 1097 (1989) 31

Michael Orey, *The Patent Epidemic*, Business Week, Jan. 9, 2006 50

1 William C. Robinson, THE LAW OF PATENTS FOR USEFUL INVENTIONS (1890) 44

Elizabeth I. Rogers, *The Phoenix Precedents: The Unexpected Rebirth of Regional Circuit Jurisdiction Over Patent Appeals and the Need for a Considered Congressional Response*, 16 Harv. J. Law & Tech. 411 (2003) 32

U.S. Federal Trade Commission, *To Promote Innovation: The Proper Balance of Competition and Patent Law and Policy* (2003). ..... *passim*

VI WRITINGS OF THOMAS JEFFERSON (Washington ed.) 23

OPINIONS BELOW

The opinion of the Court of Appeals (Pet. App. 1a–17a) is unreported. The opinion and final judgment of the District Court (Pet. App. 18a–49a) is reported at 298 F. Supp. 2d 581 (E.D. Mich. 2003).

JURISDICTION

The judgment of the Court of Appeals was entered on January 6, 2005. No petition for rehearing was filed. On April 6, 2005, the Petitioner timely filed a petition for certiorari, which this Court granted on June 26, 2006. This Court's jurisdiction is invoked under 28 U.S.C. § 1254(1).

STATUTORY PROVISIONS INVOLVED

This case concerns the standard of patentability set forth in § 103(a) of the Patent Act, 35 U.S.C. § 103(a), which provides:

> § 103. Conditions for patentability; non-obvious subject matter
>
> (a) A patent may not be obtained though the invention is not identically disclosed or described as set forth in section 102 of this title, if the differences between the subject matter sought to be patented and the prior art are such that the subject matter as a whole would have been obvious at the time the invention was made to a person having ordinary skill in the art to which said subject matter pertains. Patentability shall not be negatived by the manner in which the invention was made.

STATEMENT OF THE CASE

This case presents a variant of a question that has underlain dozens of this Court's precedents dating back to 1851: How does a court go about deciding whether subject matter claimed in a patent should be deemed "non-obvious subject matter," 35 U.S.C.

§ 103(a), and thus eligible for a grant of government-backed rights to exclude its use by others.

A. Statutory and Case Law Background

The Constitution authorizes Congress "[t]o promote the Progress of . . . useful Arts, by securing for limited Times to . . . Inventors the exclusive Right to their . . . Discoveries." U.S. Const. art. I, § 8, cl. 8. Pursuant to this grant of authority, Congress has enacted the Patent Act, 35 U.S.C. §§ 1-376, which prescribes the conditions under which a person who "invents or discovers any new and useful process, machine, manufacture, or composition of matter, or any new and useful improvement thereof, may obtain a patent therefor." 35 U.S.C. § 101. One of the statutory "conditions for patentability" is that subject matter alleged to be an invention or discovery must have been "non-obvious subject matter" at the time of its making. 35 U.S.C. § 103(a).

The concept of "non-obvious subject matter" traces to this Court's decision in *Hotchkiss v. Greenwood*, 52 U.S. (11 How.) 248 (1851). In that case, the Court held invalid a patent that claimed a method of manufacturing knobs (e.g., doorknobs) made of clay or porcelain. The method included steps for fastening a knob to a threaded "shank." The exact same method had previously been used to make knobs of wood and metal; the alleged innovation was applying the pre-existing method to knobs made of clay or porcelain. In rendering its judgment of patent invalidity, the Court formulated and applied the following legal standard (52 U.S. (11 How.) at 267):

> [U]nless more ingenuity and skill in applying the old method of fastening the shank and the knob were required in the application of it to the clay or porcelain knob than were possessed by an ordinary mechanic acquainted with the business, there was an absence of that degree of skill and ingenuity which constitute essential elements of every invention. In other words, the improvement is the work of the skilful mechanic, not that of the inventor.

Between 1851 and 1952, this Court frequently considered and determined the merits of patent invalidity defenses in infringement cases, and in so doing, frequently considered and determined whether particular subject matter claimed in an issued patent was sufficiently innovative as to satisfy the general condition for patentability set forth in *Hotchkiss*.[1] This body of "judicial precedents embracing the *Hotchkiss* condition," *Graham v. John Deere Co.*, 383 U.S. 1, 17 (1966), encompassed diverse types of alleged inventions in diverse technological fields, and represented a substantial public investment in the development of patent law.

In 1952, Congress codified the "non-obvious subject matter" condition in § 103 of the Patent Act (since re-designated § 103(a)).[2] This Court first interpreted the new § 103 in *Graham v. John Deere Co.*, *supra*. *Graham* expressly rejected arguments that § 103 was purportedly "intended to sweep away judicial precedents and lower the level of patentability." 383 U.S. at 16. *Graham* held, to the contrary, that "the section was intended merely as a codification of judicial precedents embracing the *Hotchkiss* condition, with congressional directions that inquiries into the obviousness of the subject matter sought to be patented are a prerequisite to patentability." *Id.* at 17; *see also id.* at 3-4 ("[T]he 1952 Act was intended to codify judicial precedents embracing the principle long ago announced by this Court in *Hotchkiss v. Greenwood*, [52 U.S.] 11 How. 248 (1851)."). The Court emphasized in *Graham*, "it bears repeating that we find no change in the general strictness with which the test is to be applied." 383 U.S. at 19.

---

[1] *E.g.*, *Goodyear Tire & Rubber Co. v. Ray-O-Vac Co.*, 321 U.S. 275 (1944) (upholding patent claims describing a leak-proof battery); *De Forest Radio Co. v. General Elec. Co.*, 283 U.S. 664 (1931) (invalidating patent claims describing an improved vacuum tube); *Eibel Process Co. v. Minnesota & Ontario Paper Co.*, 261 U.S. 45 (1923) (upholding patent claims describing paper-making machinery).

[2] Prior to 1984, current § 103(a) constituted the entire text of § 103. Current subsections "(b)" and "(c)" of § 103 were added by amendments in 1984 and 1995, and are not at issue here.

Graham also held that "the ultimate question of patent validity is one of law," *id.* at 17, and was to be "determined" with reference to three "factual inquiries," namely: (i) "the scope and content of the prior art,"[3] (ii) the "differences between the prior art and the claims at issue," and (iii) "the level of ordinary skill in the pertinent art." *Id.* The Court also stated that "[s]uch secondary considerations as commercial success, long felt but unsolved needs, failure of others, etc., might be utilized to give light to the circumstances surrounding the origin of the subject matter sought to be patented. As indicia of obviousness or nonobviousness, these inquiries may have relevancy." *Id.* at 17-18.

In two subsequent decisions, *Anderson's-Black Rock, Inc. v. Pavement Salvage Co.*, 396 U.S. 57, 60 (1969), and *Sakraida v. Ag Pro, Inc.*, 425 U.S. 273, 282 (1976), this Court unanimously reaffirmed its long-standing approach to determining whether a claimed invention that includes no new elements, but consists entirely of a "combination" of pre-existing elements, can properly be deemed to have been non-obvious subject matter at the time of its making. Under *Sakraida* and *Anderson's-Black* (and their many predecessor cases),[4] where an alleged invention consists of "an assembly of old elements," a court must inquire whether the claimed invention "only unites old elements with no change in their respective functions," or whether the combined elements co-act with one another to produce some "new or different function" or "an

---

[3] In patent parlance the term "prior art," 35 U.S.C. § 103(a), refers to pre-existing knowledge against which the patentability of claimed subject matter must be assessed.

[4] *See* note 17 and accompanying text *infra*. As stated by this Court in *Sakraida*, "Courts should scrutinize combination patent claims with a care proportioned to the difficulty and improbability of finding invention in an assembly of old elements. . . . A patent for a combination which only unites old elements with no change in their respective functions . . . obviously withdraws what is already known into the field of its monopoly and diminishes the resources available to skillful men." 425 U.S. at 281 (quoting *Great Atl.& Pac. Tea Co. v. Supermarket Equip. Corp.*, 340 U.S. 147, 152-53 (1950)).

effect greater than the sum of the several effects taken separately." *Sakraida*, 425 U.S. at 282 (quoting *Anderson's-Black*, 396 U.S. at 60-61 (quoting *Lincoln Eng'g Co. v. Stewart-Warner Co.*, 303 U.S. 545, 549 (1938))). If there is no such new or different function or effect, then the claimed subject matter is said to fail "the test of validity of combination patents," *Sakraida*, 425 U.S. at 282 (quoting *Anderson's-Black*, 396 U.S. at 60), and is deemed to have been obvious under 35 U.S.C. § 103 without the necessity of further analysis. Prior to this case, *Sakraida* was this Court's most recent decision applying § 103.

Commencing on October 1, 1982, appeals from district court judgments in civil actions "arising under" federal patent law were diverted from the regional circuits to a newly-created intermediate appellate court, the Court of Appeals for the Federal Circuit.[5] Within a year of its creation, the Federal Circuit announced that "[t]here is no warrant for judicial classification of patents, whether into 'combination' patents and some other unnamed and undefined class or otherwise," and further stated that "[r]eference to 'combination' patents is, moreover, meaningless." *Stratoflex, Inc. v. Aeroquip Corp.*, 713 F.2d 1530, 1540 (Fed. Cir. 1983); *see also Medtronic, Inc. v. Cardiac Pacemakers, Inc.*, 721 F.2d 1563, 1566 (Fed. Cir. 1983) ("It but obfuscates the law to posit a non-statutory, judge-created classification labeled 'combination patents.'").

Under Federal Circuit precedent, a claimed invention that consists entirely of pre-existing elements can never be deemed obvious, and thus unpatentable under 35 U.S.C. § 103(a), in the absence of "specific findings showing a teaching, suggestion, or motivation to combine prior art teachings in the particular manner claimed by the patent at issue." *Teleflex Inc. v. KSR Int'l Co.*, No. 04-1152 (Pet. App. 16a). Under this "teaching-suggestion-motivation

---

[5] *See Holmes Group, Inc. v. Vornado Air Circulation Sys., Inc.*, 535 U.S. 826, 829 (2002). The Federal Circuit is "a specialized court," *Dickinson v. Zurko*, 527 U.S. 150, 163 (1999), whose jurisdiction is limited to the particular matters set out in 28 U.S.C. § 1295(a).

test" (*id.*), the existence of "[m]otivation to combine" is said to be "a question of fact" that a lay jury may determine. *Group One Ltd.* v. *Hallmark Cards, Inc.*, 407 F.3d 1297, 1303-06 (Fed. Cir. 2005).

The present litigation, soon to begin its fifth year, well illustrates how the Federal Circuit "teaching-suggestion-motivation test" has gutted 35 U.S.C. § 103(a) as a meaningful defense to claims for alleged patent infringement, and has permitted "a class of speculative schemers . . . to lay a heavy tax upon the industry of the country, without contributing anything to the real advancement of the art." *Atlantic Works v. Brady*, 107 U.S. 192, 200 (1883).

B. Factual Background

1. The Technology at Issue

This case involves a simple and ubiquitous technology: "gas pedals" used to operate passenger cars and light trucks. Petitioner supplies gas pedals to General Motors Corp. ("GM") for installation in various Chevrolet (e.g., Silverado, Tahoe, Suburban, Trailblazer), GMC (e.g., Sierra, Envoy, Yukon), Buick (Rainier), Cadillac (e.g., Escalade), and other GM vehicle models sold in United States commerce. Petitioner's sale of some of these gas pedals is alleged to infringe a patent owned by Respondents.

The patented subject matter at issue in this case is a combination of two pre-existing elements: (i) a pre-existing type of "adjustable pedal," and (ii) a pre-existing type of "electronic control" found in newer cars. Both of these components are explained below.

2. Adjustable Pedals

The particular gas pedals at issue here are "adjustable" pedals, that is, pedals whose resting position can be moved, or "adjusted," relative to a driver's seating position. Adjustable foot pedals permit drivers of various statures to operate a motor vehicle with the driver's seat in a more comfortable position and at a more optimal distance from the steering wheel (and air bag) than may be possible with non-adjustable pedals. Adjustable pedals are old in the art;

they were a common technology at least twenty-five years before the alleged invention at issue here.

When adjustable pedals became available on standard passenger automobiles in the 1970s, the pedals generally controlled a mechanical link (such as a cable) that connected the pedal to the engine of the car. By stepping on the pedal, the driver would cause the pedal to rotate about a pivot, and this rotational motion would pull the cable or other mechanical link, which in turn would pull on a valve housed in a carburetor or fuel injection unit, thereby increasing the amount of fuel and air entering the engine and hence raising the engine speed.

One particular type of prior art adjustable pedal is disclosed in U.S. Patent No. 5,010,782, which was issued April 30, 1991, to an inventor named Asano (hereinafter, the "Asano" pedal). In this type of adjustable pedal, a gas pedal pivot is carried in a support bracket attached to the car's footwell, and the pivot's position thus remains constant when the pedal's resting position is adjusted forward or backward to accommodate drivers of different sizes.

3. The Transition to Electronically-Controlled Fuel Systems

Prior to the mid-1990s, most new vehicles sold in the United States were equipped with engines whose throttles were actuated by cables or similar mechanical linkage. Commencing in the mid-1990s, increasing numbers of vehicles sold in the United States were equipped with engines whose throttles were controlled electronically, by computerized systems commonly known as "electronic throttle controls" or ETCs. Electronic throttle controls can accommodate improved traction control and vehicle directional stability systems, simplified cruise controls, and on-board computer-controlled systems for improving fuel economy and reducing tailpipe emissions.

In vehicles whose engines are equipped with electronic throttle controls, the gas pedal is typically coupled to an electronic sensor that engages the pivot shaft of the gas pedal. Thus, in newer cars, stepping on the gas pedal does not pull a cable or mechanical linkage;

instead, the electronic sensor detects the position of the pedal and generates an electronic signal. The electronic signal travels via wire into the engine compartment where, typically, it is input into the electronic throttle control.

4. The Engelgau patent

Respondents are the owners of U.S. Patent No. 6,237,565 B1 issued May 29, 2001, for an alleged invention by Steven Engelgau entitled "Adjustable Pedal Assembly With Electronic Throttle Control" (the "Engelgau patent"). According to Respondents, the alleged invention disclosed in the Engelgau patent was made by Mr. Engelgau on February 14, 1998. *See Teleflex Inc. v. KSR Int'l Co.*, 298 F. Supp. 2d 581, 588 (E.D. Mich. 2003) (Pet. App. 29a). The patent application that issued as the Engelgau patent was filed August 22, 2000.

The Engelgau patent characterizes the alleged "invention"[6] in four "claims,"[7] but only one of those claims is at issue in this

---

[6] The word "invention" is a term of art in patent law. As used in the Patent Act, the word "invention" refers to "a concept that is complete," *Pfaff v. Wells Elecs., Inc.*, 525 U.S. 55, 66 (1998), and that falls within one of the subject matter categories listed in 35 U.S.C. § 101, *i.e.*, is a concept that constitutes "any new and useful process, machine, manufacture, or composition of matter, or any new and useful improvement thereof." An "invention" can be made and exist long before it is described in a patent application. *Pfaff*, 525 U.S. at 68-69 (holding patent invalid "because the invention had been on sale for more than one year in this country before he [the alleged inventor] filed his patent application").

[7] The word "claim" is a term of art in patent law. As used in the Patent Act, the word "claim" refers to a statutorily required sentence that "particularly point[s] out and distinctly claim[s] the subject matter which the applicant regards as his invention." 35 U.S.C. § 112 ¶ 2. The allowed "claims" made in a patent application define "the scope of a patent grant," *Markman v. Westview Instruments, Inc.*, 517 U.S. 370, 373 (1996) (quoting 3 E. Lipscomb, WALKER ON PATENTS § 11:1, at 280 (3d ed. 1985)), but they are not necessarily accurate as descriptions of an applicant's actual "invention." *Cf. Festo Corp. v. Shoketsu Kinzoku Kogyo Kabushiki Co.*,

litigation. That claim—numbered claim 4 in the patent—describes (i) a pre-existing "adjustable pedal assembly," combined with (ii) a pre-existing "electronic control." The patent states that the claimed "adjustable pedal assembly" may "be any of various adjustable pedal assemblies known in the art" (col. 2, lines 55-56). The patent further states that the claimed "electronic control" may "be any of various electronic throttle control mechanisms known in the art" (*id.* at col. 3, lines 22-24).

C. The Proceedings Below

1. The Respondents' Infringement Action

Respondents commenced this civil action for alleged patent infringement on November 18, 2002. Respondents accused Petitioner of making unauthorized use of the patented invention described by claim 4 of the Engelgau patent, in violation of 35 U.S.C. § 271(a). Petitioner denied infringement and pleaded a defense of invalidity under 35 U.S.C. § 103(a). *See* 35 U.S.C. §282(2) (authorizing such a defense to be raised in an infringement case).

Following the completion of discovery, Petitioner moved for summary judgment of invalidity. Petitioner contended that claim 4 of the Engelgau patent[8] was worded so broadly as to describe the

---

(..continued)

535 U.S. 722, 731 (2002) ("[T]he nature of language makes it impossible to capture the essence of a thing in a patent application."); *Graver Tank & Mfg. Co. v. Linde Air Prods. Co.*, 336 U.S. 271, 276-77 (1949) (invalidating patent claims that "comprehended more than the invention").

[8] It bears emphasizing that this case raises no question whether the alleged invention disclosed in the Engelgau patent specification and drawings and described in claims 1-3 of the Engelgau patent might be deemed "non-obvious subject matter," but only whether claim 4 of the Engelgau patent is invalid because its broadly worded terms are not *limited* to "non-obvious subject matter."

combination of (i) the 1991 Asano pedal,[9] with (ii) an off-the-shelf, modular electronic pedal position sensor that was specifically designed (a) to engage the rotating pivot shaft of any gas pedal, and (b) to be mounted to whatever support structure carried the gas pedal pivot shaft, which in the Asano pedal was its support bracket. A computer animation, comparing the words of claim 4 with the 1991 Asano pedal and a 1994 pedal position sensor, was submitted to the District Court in support of Petitioner's motion for summary judgment without objection and is included in the joint appendix materials. (*See* Joint Appendix ["JA"] at 102a-104a; Supplemental Joint Appendix ["JSA"] at 81.)

Petitioner contended that claim 4 of the Engelgau patent was invalid under 35 U.S.C. § 103(a) as that statute had been construed by this Court in *Sakraida*, *Anderson's-Black*, and their many predecessor cases dealing with "combination" patent claims. Alternatively, Petitioner contended that the undisputed prior art rendered claim 4 invalid even if evaluated under the Federal Circuit teaching-suggestion-motivation test.

In response to Petitioner's motion for summary judgment, Respondents did not attempt to defend the validity of claim 4 of the Engelgau patent under "the test of validity of combination patents." *Sakraida*, 425 U.S. at 282 (quoting *Anderson's-Black*, 396 U.S. at 60). Rather, Respondents contended that Petitioner's defense of invalidity under 35 U.S.C. §§ 103(a) and 282(2) was subject to the Federal Circuit teaching-suggestion-motivation test (JA 130a-133a), and that test required Petitioner to prove as a "*fact*" (JA 133a (emphasis in original)), by "clear and convincing evidence" (JA 127a),[10] that a hypothetical "person having ordinary skill in the art,"

---

[9] It is undisputed that the Asano patent was never cited to, or considered by, the PTO during the prosecution of the Engelgau patent.

[10] In 1983 the Federal Circuit announced, without citation of authority, that *any* facts proffered to support *any* defense of invalidity under 35 U.S.C. § 282(2) must be "proven" in *every* instance by "clear and convincing evidence." *Connell v. Sears, Roebuck & Co.*, 722 F.2d 1542, 1549 (Fed. Cir. 1983) ("the evidence relied on to prove those facts must be

35 U.S.C. § 103(a), "confronted with the same problems as the inventor and with no knowledge of the claimed invention, would select the elements from the cited prior art references for combination in the manner claimed" (JA 134a (quoting *In re Rouffet*, 149 F.3d 1350, 1357 (Fed. Cir. 1998)).)

The "problem" Mr. Engelgau set out to "solve," Respondents contended, was to develop an adjustable pedal assembly that included an "electronic control" and also was "not expensive, time consuming to assemble, and [did] not require a significant amount of packaging space." (JA 142a.) "[C]ombining Asano with an electronic control," Respondents continued, "would not have solved any of the problems confronting Engelgau in his design of the Engelgau Patent." (JA 141a.) Therefore, Respondents contended, a jury could reasonably find that "someone in Engelgau's shoes" would "shun Asano" (JA 146a), and this possibility meant that the District Court could not properly determine the validity of claim 4 of the Engelgau patent on summary judgment.

2. The District Court's Decision

On December 12, 2003, the District Court (per Chief Judge Lawrence P. Zatkoff) granted summary judgment dismissing Respondents' complaint on the basis that claim 4 of the Engelgau patent was invalid under § 103(a). *Teleflex Inc. v. KSR Int'l Co.*, 298 F. Supp. 2d 581 (E.D. Mich. 2003) (Pet. App. 18a-29a). The District Court determined that there was no genuine issue of fact

---

(..continued)

clear and convincing") (dictum) (emphasis added). This openly expressed preference for patentees over accused infringers is without basis in the Patent Act or any patent precedent of this Court, and in fact is antithetical to applicable precedents of this Court. *See Herman & McClean v. Huddleston*, 459 U.S. 375, 387-90 (1983) (noting that, outside the context of "particularly important individual interests or rights" such as parental rights or deportation, the Court does not "depart from the preponderance-of-the-evidence standard generally applicable in civil actions").

with respect to any of the *Graham* inquiries, and that Petitioner was entitled to judgment as a matter of law.

Respondents did not dispute that the references relied on by Petitioner, including the Asano reference, were all "prior art" to the Engelgau patent for purposes of 35 U.S.C. § 103(a). *See* 298 F. Supp. 2d at 587-90 (Pet. App. 28a-35a); Resp. C.A. Reply Br. at 9 ("Teleflex does not dispute that the Asano Patent constitutes prior art to the Engelgau Patent").[11] There was, thus, no genuine issue of fact with respect to "the scope and content of the prior art." *Graham*, 383 U.S. at 17.

There was also no genuine issue of fact with respect to "the level of ordinary skill in the pertinent art." *Id.* For purposes of summary judgment, Petitioner stipulated to Respondents' contention that the statutory "person having ordinary skill in the art"[12] should be deemed a person "with an undergraduate degree in mechanical engineering or an equivalent amount of industry experience who has familiarity with pedal control systems for vehicles." 298 F. Supp. 2d at 590-91 (Pet. App. 36a).

There was also no genuine issue of fact with respect to the "differences between the prior art and the claim[] at issue." *Graham*, 383 U.S. at 17. On its face, the Asano patent "teaches the structure and function of each of the claim 4 limitations, except those relating to an electronic pedal position sensor." 298 F. Supp. 2d at

---

[11] As noted above, Respondents disputed whether a person having ordinary skill in the art, confronted with the same problem that allegedly confronted Mr. Engelgau, would have been "motivated" to add a pedal position sensor to the adjustable gas pedal disclosed in the Asano patent, but Respondents did not dispute that the Asano pedal was "prior art" for purposes of § 103(a).

[12] The statutory phrase, "person having ordinary skill in the art," 35 U.S.C. § 103(a), does not refer to an actual person, but rather refers to a hypothetical person who has constructive knowledge of all pertinent "prior art." *E.g., Railroad Supply Co. v. Elyria Iron & Steel Co.*, 244 U.S. 285, 291 (1917); *Mast, Foos & Co. v. Stover Mfg. Co.*, 177 U.S. 485, 493 (1900).

592 (Pet. App. 39a). Other undisputed prior art references expressly disclose the use of "an electronic pedal position sensor attached to an accelerator pedal support bracket and engaged with a pivot shaft," *id.* at 590 (Pet. App. 34a), with the sensor "being responsive to the pedal pivot shaft and causing a signal to be sent to the engine to increase or decrease engine speed based on the rotation of the pivot shaft," *id.* at 592 (Pet. App. 40a). As for Respondents' contention that adding a pedal position sensor to Asano would not have solved the "problems" that Mr. Engelgau allegedly set out to solve, the District Court noted: "This argument . . . is unavailing because . . . claim 4 contains none of the limitations that allegedly make the preferred embodiment of the pedal assembly structurally less complex than the Asano pedal assembly." *Teleflex*, 298 F. Supp. 2d at 593 n.2 (Pet. App. 42a).

Although Petitioner had urged the District Court to follow and apply this Court's long-established "test of validity of combination patents," *Sakraida*, 425 U.S. at 282 (quoting *Anderson's-Black Rock*, 396 U.S. at 60), the District Court followed Federal Circuit precedent and made additional determinations in an attempt to satisfy the Federal Circuit teaching-suggestion-motivation test. Based on the undisputed prior art of record, the District Court determined that a person having ordinary skill in the art having knowledge of the prior art Asano pedal and the prior art position sensors "would be motivated to combine the two." *Teleflex*, 298 F. Supp. 2d at 594 (Pet. App. 43a). The District Court observed (*id.* at 594 (Pet. App. 41a)):

> It is undisputed that in the mid-1990's more cars required the use of an electronic device, such as a pedal position sensor, to communicate driver inputs to an electronically managed engine. It is also undisputed that adjustable pedal assemblies have existed in the art since the late 1970's. Clearly it was inevitable that adjustable pedal assemblies would be joined with an electronic device to work in conjunction with modern electronically controlled engines.

Finally, the District Court noted Respondents' failure to present evidence of any long-felt need for, or any failed attempts by others to devise, the subject matter described by claim 4 of the Engelgau

patent. *Teleflex*, 298 F. Supp. 2d at 596 (Pet. App. 48a). Respondents contended that the claimed invention had enjoyed commercial success. The District Court concluded that the claimed commercial success, even if taken at face value, was "insufficient to overcome [KSR]'s clear and convincing evidence of obviousness." (*Id.* (Pet. App. 48a).)

3. The Federal Circuit's Decision

Respondents timely appealed to the Federal Circuit, complaining that "the lower court diluted beyond recognition the barriers that the Federal Circuit has erected to a finding of obviousness." (Resp. C.A. Br. at 4.) Respondents argued that, as bars to patentability under § 103(a), the invalidating legal effect of multiple prior art references (in this case, Asano's pre-existing adjustable pedal assembly and an off-the-shelf pedal position sensor) could not be determined without a jury trial of whether a person having ordinary skill in the art would have had motivation to combine the references cited by the District Court.

In response, Petitioner once again cited and relied on this Court's *Sakraida* and *Anderson's-Black* decisions. In the alternative, Petitioner urged affirmance even under the Federal Circuit teaching-suggestion-motivation test of invalidity.

On January 6, 2005, a panel of the Federal Circuit vacated the District Court's judgment and remanded for further proceedings. The Federal Circuit declined to acknowledge the existence of, to follow, or to distinguish *Sakraida* or any other of this Court's precedents applying the "test of validity of combination patents." *Sakraida*, 425 U.S. at 282 (quoting *Anderson's-Black*, 396 U.S. at 60). The Federal Circuit also elected not to publish its decision even though it was vacating a comprehensive reported decision by the District Court.

Instead, citing its own post-1982 precedents, the Federal Circuit held that the District Court "did not apply the correct teaching-suggestion-motivation test." (Pet. App. 8a.) And, applying the purportedly "correct" test, the Federal Circuit held that the undisputed prior art of record not only did not support the District

Court's grant of summary judgment to Petitioner, but that the undisputed prior art purportedly did not make out even "a *prima facie* case of obviousness." (*Id.* at 14a.)

The Federal Circuit did not question the District Court's conclusion that one prior art reference on adjustable pedals (namely, Asano) disclosed "all of the structural limitations of [Respondents' patent claim] with the exception of the electronic control." (Pet. App. 9a (citing 298 F. Supp. 2d at 592).) The Federal Circuit also did not question the District Court's conclusion that "[e]lectronic controls were well known in the prior art." (*Id.*) The Federal Circuit also did not question that claim 4 of the Engelgau patent was worded so broadly as to encompass (i) a pre-existing adjustable pedal assembly, combined with (ii) a pre-existing electronic control, with each claimed element performing exactly the same function, in combination, that it had been designed to perform individually.

Nevertheless, in the Federal Circuit's view, the undisputed prior art of record did not render the Respondents' claimed invention unpatentable under § 103(a), because Petitioner had not gone further and proved, beyond genuine dispute and by "clear and convincing evidence" (Pet. App. 5a, 14a), that "there was a suggestion or motivation to combine the teachings of Asano with an electronic control in the particular manner claimed by claim 4 of the [Engelgau] patent" (Pet. App. 12a). The Federal Circuit held that the "correct standard requires a court to make *specific* findings showing a teaching, suggestion, or motivation to combine prior art teachings in the *particular* manner claimed by the patent at issue." (*Id.* at 16a (emphasis added).) Accordingly, the Federal Circuit remanded for determination "whether a person of ordinary skill in the art *would have been motivated*, at the time the invention was made, to attach an electronic control to the support structure of the pedal assembly disclosed by the Asano patent." (*Id.* at 16a-17a (emphasis added).)

SUMMARY OF THE ARGUMENT

The teaching-suggestion-motivation test has no basis in the text of § 103(a) and conflicts with numerous precedents of this Court

spanning a 150-year period. The Federal Circuit test is built on a widely-recognized and inappropriate rejection of this Court's precedents. The test guts § 103(a) as a meaningful defense to liability for alleged patent infringement in many cases. It all but precludes the use of summary judgment as a means of determining the ultimate question of patent validity under § 103. And it effectively strips courts of their traditional authority to determine the validity of patent claims under § 103 and transfers that authority to lay juries. The Federal Circuit has reinterpreted § 103 as providing, not a "condition for patentability" (as its statutory title states, and as this Court has construed § 103 as providing), but as a condition for *challenges* to patentability that is very difficult for the PTO or an alleged infringer to meet, and effectively forces the issuance and upholding of patents even where, as in this case, claimed subject matter differs from undisputed prior art in only trivial respects.

The Court in this case is presented with an unusual and stark choice between adhering to its own patent law precedents, developed over a 150-year period, or abandoning those precedents wholesale in favor of a radical experiment by a lower court, an experiment that was undertaken in open defiance of this Court's authority. Considerations of *stare decisis*, as well as fundamental policies served by § 103(a), counsel for the retention of this Court's traditional approach to determining whether claimed subject matter qualifies for patent protection. That approach looks to whether a person having ordinary skill in an art would have been *capable* of adapting extant technology to achieve a desired result (e.g., making a *clay* door knob having a threaded shank), not whether such a person would have had *motivation* to adapt extant technology to achieve a desired result.

As the Solicitor General and the PTO have both correctly pointed out, "[t]he claimed invention here is at least as obvious as" were the claimed inventions that this Court held unpatentable in *Anderson's-Black Rock, Inc. v. Pavement Salvage Co.*, 396 U.S. 57 (1969), and *Graham v. John Deere Co.*, 383 U.S. 1 (1966). *See* Brief for the United States as Amicus Curiae ("Solicitor General Amicus Brief"), at 17. Under this Court's precedents, the District Court's

award of summary judgment of invalidity to Petitioner was clearly correct. The Federal Circuit's judgment should be reversed.

ARGUMENT

I. THE TEACHING-SUGGESTION-MOTIVATION TEST HAS NO BASIS IN THE TEXT OF SECTION 103(a) AND CONFLICTS WITH THIS COURT'S PRECEDENTS.

Section 103(a), titled "Conditions for patentability; non-obvious subject matter," provides:

> A patent may not be obtained . . . if the differences between the subject matter sought to be patented and the prior art are such that the subject matter as a whole would have been obvious at the time the invention was made to a person having ordinary skill in the art to which said subject matter pertains.

The statute states a "condition" that must be satisfied before a claimed invention can be deemed eligible for a grant of government-backed rights to exclude its use by others. The statute does not purport to require that *every* claimed invention be deemed "non-obvious subject matter," no matter how small or trivial might be the differences between the claimed subject matter and prior art, unless an accused infringer "prove[s] by clear and convincing evidence" (Pet. App. 5a; *see also id.* at 14a n.4) the existence of some "'teaching, suggestion, or motivation' that would have led a person of ordinary skill in the art to combine the relevant prior art teachings in the manner claimed" (*id.* at 6a), and that further yields a jury verdict[13] or a district court's "specific findings" to that effect (*id.* at 16a).

---

[13] In 1984, the Federal Circuit held that accused infringers had no right to judicial determination of the ultimate legal question of validity under § 103(a), *see Railroad Dynamics, Inc. v. A. Stucki Co.*, 727 F.2d 1506, 1514 (Fed. Cir. 1984) ("[I]t was not error to submit the question of obviousness to the jury."), and harshly dismissed competing views.

To the contrary, this Court in applying § 103 has held that there are a variety of circumstances in which claimed subject matter may fail to satisfy the condition for patentability set forth in that section. Similarly, this Court's earlier "precedents embracing the *Hotchkiss* condition" that §103 codified, *Graham v. John Deere Co.*, 383 U.S. 1, 17 (1966), provide a rich source of analogies for deciding whether, in a given case, claimed subject matter is properly deemed a patentable invention or non-obvious subject matter.[14] In none of

---

(..continued)

Compare Sarkisian v. Winn-Proof Corp., 688 F.2d 647, 651 (9th Cir. 1982) ("The court must, in all cases, determine obviousness as a question of law independent of the jury's conclusion.") *with Perkin-Elmer Corp. v. Computervision Corp.*, 732 F.2d 888, 895 & n.5 (Fed. Cir. 1984) (rejecting *Sarkisian* as making "charades of motions for directed verdict or JNOV under [Federal Rule of Civil Procedure] 50 in patent cases").

[14] *E.g., Great Atl. & Pac. Tea Co. v. Supermarket Equip. Corp.*, 340 U.S. 147, 151-52 (1950) (invalidating patent claims describing supermarket check-out counter structures); *Mandel Bros., Inc. v. Wallace*, 335 U.S. 291, 296 (1948) (invalidating patent claims describing perspiration inhibiting composition); *Goodyear Tire & Rubber Co. v. Ray-O-Vac Co.*, 321 U.S. 275, 279 (1944) (upholding patent claims describing a leak-proof battery); *Standard Brands, Inc. v. National Green Yeast Corp.*, 308 U.S. 34, 37 (1939) (invalidating patent claims describing process for manufacturing compressed yeast); *Lincoln Eng'g Co. v. Stewart-Warner Corp.*, 303 U.S. 545, 549-52 (1938) (invalidating patent claims describing grease gun); *Essex Razor Blade Corp. v. Gillette Safety Razor Co.*, 299 U.S. 94, 98 (1936) (invalidating claims describing safety razor); *Paramount Publix Corp. v. American Tri-Ergon Corp.*, 294 U.S. 464, 471-73 (1935) (invalidating patent claims describing a process for producing a combined sound and picture positive film); *De Forest Radio Co. v. General Elec. Co.*, 283 U.S. 664, 682-85 (1931) (invalidating patent claims describing vacuum tube); *Saranac Automatic Mach. Corp. v. Wirebounds Patents Co.*, 282 U.S. 704, 711 (1931) (invalidating patent claims describing machinery for making box blanks); *Temco Elec. Motor Co. v. Apco Mfg. Co.*, 275 U.S. 319 (1928) (upholding patent claims describing shock absorber); *Concrete Appliances Co. v. Gomery*, 269 U.S. 177, 184-85 (1925) (invalidating patent claims describing apparatus for

this Court's precedents, spanning more than 150 years, has it been held that a proven "teaching, suggestion, or motivation to combine prior art teachings in the particular manner claimed in a patent" (Pet. App. 16a), is a *prerequisite* to declaring claimed subject matter unpatentable.

The Federal Circuit has subjected invalidity defenses under § 103(a) to a blanket teaching-suggestion-motivation test only by openly rejecting this Court's precedents. That divergence between the two courts has been widely recognized by numerous commentators,[15] and can also be demonstrated with objective measures such as the failure of the Federal Circuit ever to apply the holding of this Court's most recent precedent on § 103. The sharp

---

(..continued)

transporting wet concrete); *Eibel Process Co. v. Minnesota & Ontario Paper Co.*, 261 U.S. 45, 63-65 (1923) (upholding validity of patent claims describing paper making machinery); *Grinnell Washing Mach. Co. v. E.E. Johnson Co.*, 247 U.S. 426, 433-34 (1918) (invalidating claims describing a washing machine gearing device); *Railroad Supply Co v. Elyria Iron & Steel Co.*, 244 U.S. 285, 291-94 (1917) (invaliding patent claims describing railroad tie plates); *Diamond Rubber Co. v. Consolidated Rubber Tire Co.*, 220 U.S. 428, 440-43 (1911) (upholding patent claims describing rubber tired wheel design); *Expanded Metal Co. v. Bradford*, 214 U.S. 366, 381 (1909) (upholding patent claims describing method of making expanded sheet metal); *Carnegie Steel Co. v. Cambria Iron Co.*, 185 U.S. 403, 425-30 (1902) (upholding patent claim describing method of mixing molten pig metal); *Mast, Foos & Co. v. Stover Mfg. Co.*, 177 U.S. 485, 491-93, 498 (1900) (invalidating patent claim describing apparatus for windmill-driven pitman arm); *Office Specialty Mfg. Co. v. Fenton Metallic Mfg. Co.*, 174 U.S. 492 (1899) (invalidating patent claims describing configuration of book storage case); *Keystone Mfg. Co. v. Adams*, 151 U.S. 139 (1894) (upholding validity of patent claim describing improved corn sheller); *Knapp v. Morss*, 150 U.S. 221, 227-28 (1893) (invalidating patent claim describing adjustable dress form). The foregoing are merely examples of this Court's numerous "judicial precedents embracing the *Hotchkiss* condition." *Graham*, 383 U.S. at 17.

[15] *See* discussion *infra* at pp. 28-30.

difference between Federal Circuit and Supreme Court precedent in this area has immensely important consequences as shown by the circumstances of this very case.

A. The Teaching-Suggestion-Motivation Test Is Inconsistent With This Court's Precedents

Since Congress codified the *Hotchkiss* condition in § 103, this Court has applied the statutory standard in six cases. In five of those cases, the Court invalidated patent claims under § 103. In all of those cases the Court drew on *Hotchkiss* and other pre-codification precedents as informing its analysis of whether particular claimed subject matter should be deemed an "invention" or "non-obvious subject matter."[16] In none of those cases did the Court hold that § 103 was no defense to liability for alleged patent infringement in the absence of some proven "teaching, suggestion, or motivation" to combine or modify prior art references.

In *Graham*, this Court invalidated patent claims that described a mechanism for permitting a plow shank to pivot when it encountered a rock in the ground. The claimed subject matter included a hinge plate positioned *above* the plow shank, whereas prior art disclosed a hinge plate positioned *below* the plow shank. This Court held that the reversal in the arrangement of two pre-existing plow components "presents no operative mechanical distinctions, much less non-obvious differences." 383 U.S. at 26. *Graham* invalidated the asserted claims under § 103 without making any findings showing a teaching, suggestion, or motivation to modify prior art into the particular configuration claimed.

---

[16] *E.g.*, *Sakraida.*, 425 U.S. at 280-82 (quoting *Hotchkiss* and *Great Atl.*, 340 U.S. at 152); *Dann v. Johnston*, 425 U.S. 219, 225 (1976) (quoting *McClain v. Ortmayer*, 141 U.S. 419, 427 (1891), and citing *Hotchkiss* and *Keystone Driller Co. v. Northwest Eng'g Corp.*, 294 U.S. 42 (1935), and *Sharp v. Stamping Co.*, 103 U.S. 250 (1880)); *Anderson's-Black*, 396 U.S. at 60-63 (citing *Hotchkiss* and quoting *Great Atl.*, 340 U.S. at 153, and *Lincoln Eng'g*, 303 U.S. at 549); *Graham*, 383 U.S. at 25 (citing *Lincoln Eng'g*, 303 U.S. at 550).

In *Calmar, Inc. v. Cook Chemical Co.* (a companion case decided with *Graham*, *see* 383 U.S. at 26), this Court invalidated patent claims that described a pump-type sprayer container (e.g., for holding and spraying window cleaner). The claimed subject matter included a "rib" built into a top part of the sprayer container; prior art disclosed a "rib" built into the top of a *pouring-spout* container. This Court held that "[t]he substitution of a rib built into a collar likewise presents no patentable difference above the prior art" because that type of seal was "fully disclosed" in an earlier patent on a pour spout. *Id.* at 35. *Calmar* declared the claimed subject matter obvious under § 103 without making any findings showing a teaching, suggestion, or motivation to combine the cited prior art in the particular manner claimed, and indeed, *notwithstanding* the lower court's view that "there [was] nothing in the prior art *suggesting* Scoggin's unique combination of these old features." *Calmar, Inc. v. Cook Chem. Co.*, 336 F.2d 110, 113 (8th Cir. 1964) (emphasis added), *rev'd*, 383 U.S. at 26.

In *United States v. Adams*, 383 U.S. 39 (1966), this Court upheld the validity of patent claims that described a water-activated battery, each of whose components was "well known in the prior art." *Id.* at 51-52. The prior art did not "suggest" the combination that the patentee had made, *id.* at 47, but the Court did not conclude, from that point alone, that the claimed subject matter was *ipso facto* non-obvious. Rather, this Court considered many other factors including that (i) the operating characteristics of the claimed battery were "wholly unexpected[]" and had "certain valuable operating advantages over other batteries," *id.* at 51, (ii) the claimed battery had previously been considered "not practical," *id.* at 52, and (iii) "noted experts [had] expressed disbelief" that the claimed battery could possibly work, *id.*

In *Anderson's-Black Rock v. Pavement Salvage Co.*, 396 U.S. 57 (1969), this Court invalidated patent claims that described a paving apparatus. The claimed subject matter included a radiant-heat burner *suspended from* the paving apparatus, whereas prior art disclosed

radiant-heat burners that were used *separately* from the paving apparatus. *Id.* at 58-59. In holding the claims invalid under § 103, this Court followed and re-affirmed a very long line of precedents[17]

---

[17] *E.g., Great Atl.*, 340 U.S. at 150-53 (invalidating claims that recited pre-existing supermarket check-out counter structures "which only unite[d] old elements with no change in their respective functions"); *Toledo Pressed Steel Co. v. Standard Parts, Inc.*, 307 U.S. 350, 356 (1939) (invalidating claims that recited pre-existing torch body and cap structures that together "performed no joint function" but "served as separately it had done"); *Powers-Kennedy Contracting Corp. v. Concrete Mixing & Conveying Co.* 282 U.S. 175, 186 (1930) (invalidating claims that recited pre-existing structures suitable for transporting wet concrete, all of which structures "were old in the art" and whose combination accomplished "no more than an aggregate of old results"); *Grinnell Washing Mach. Co. v. E.E. Johnson Co.*, 247 U.S. 426, 432-33 (1918) (invalidating claims that recited pre-existing structures for driving a wringer washing machine, where the result produced was "only that which arises from the well-known operation of each one of the elements"); *Richards v. Chase Elevator Co.*, 158 U.S. 299, 302-03 (1895) (invalidating claims that recited grain elevator apparatus; stating, "so long as each element performs some old and well-known function, the result is not a patentable combination, but an aggregation of elements"); *Knapp v. Morss*, 150 U.S. 221, 227 (1893) (invalidating claims that recited adjustable dress form structures; stating, "the combination of old elements which performs no new function and accomplishes no new results does not involve patentable novelty"); *Brinkerhoff v. Aloe*, 146 U.S. 513, 516-17 (1892) (invalidating claims that recited rectal specula; stating, "to sustain a patent on a combination of old devices it is well-settled that a new result must be obtained, which is due to the joint and cooperating action of the old elements. Either this must be accomplished, or a new machine of distinct character and function must be constructed"); *Adams v. Bellaire Stamping Co.*, 141 U.S. 539, 542 (1891) (invalidating claims that recited pre-existing lantern structures, where "[t]he elements combined to form the alleged invention merely constituted an aggregation of old devices, each working out its own effect, without producing anything novel); *Florsheim v. Schilling*, 137 U.S. 64, 77 (1890) (invalidating claims that recited corset structures; stating, "in a patentable combination of old elements, all of the constituents must so enter into it such that each

holding that "[t]he mere aggregation of a number of old parts or elements, which, in the aggregation, perform or produce no new or different function or operation than that theretofore performed or produced by them, is not patentable invention." *Lincoln Eng'g Co. v. Stewart-Warner Corp.*, 303 U.S. 545, 549 (1938), *cited and applied in Anderson's-Black*, 396 U.S. at 60. *Anderson's-Black* held the claimed subject matter "was not an invention by the obvious-non-obvious standard," *id.* at 62-63, once again without making any findings showing a teaching, suggestion, or motivation to combine or modify cited prior art references.

Dann v. Johnston, 425 U.S. 219 (1976), concerned an attempt to patent a "machine system for automatic record-keeping of bank checks and deposits." *Id.* at 220. The claimed subject matter included data processing equipment that provided bank customers with statements that categorized debits within a *single* account, whereas prior art data processing equipment provided categorized debits within *multiple* accounts. *Id.* at 227-28. The PTO rejected the application on several grounds, including that the claimed subject matter was unpatentable under § 103. The Court of Customs and Patent Appeals (CCPA)—a predecessor court of the Federal Circuit—reversed and held that the invention was patentable because, the CCPA determined, the cited prior art passages "simply are not *suggestive* of the subject matter of the appealed claims." *In re Johnston*, 502 F.2d 765, 772 (C.C.P.A. 1974) (emphasis added), *rev'd sub nom., Dann v. Johnston*, 425 U.S. 219 (1976). This Court granted certiorari and reversed. The Court acknowledged that

---

(..continued)

qualifies every other . . . It must form either a new machine of a distinct character and function, or produce a result due to the joint and co-operating action of all the elements, and which is not the mere adding together of the separate contributions"). *See also Graham*, 383 U.S. at 10 n.3 ("A man has a right to use a saw, an axe, a plane separately; may he not combine their uses on the same piece of wood?") (quoting VI *Writings of Thomas Jefferson*, at 298 (Washington ed.))

"[t]here may be differences between respondent's invention and the state of the prior art," but held nonetheless that "[t]he gap between the prior art and respondent's system is simply not so great as to render the system non-obvious to one reasonably skilled in the art." *Id.* at 229-30. Again, the Court's opinion not only includes no findings of a teaching, suggestion, or motivation to combine or modify cited prior art references, but held that claimed subject matter was not properly deemed non-obvious *notwithstanding* the lower court's conclusion that the prior art was not "suggestive" of the claimed invention.

In *Sakraida*, the Court invalidated patent claims that described a particular configuration of dairy barn structures. Each of the claimed elements (e.g., sloped floors, stalls, etc.) was pre-existent; however, no individual prior art reference disclosed the exact configuration and arrangement of dairy barn structures as were claimed in the patent. The lower court upheld the patent's validity on the basis that, in its view, prior art "references may not be combined to anticipate the patented claim unless they *suggest* to one with ordinary skill in the art doing what the applicant has claimed." *Ag Pro, Inc. v. Sakraida*, 474 F.2d 167, 171 (5th Cir. 1973), *later proceeding*, 512 F.2d 141 (5th Cir. 1975), *rev'd*, 425 U.S. 273 (1976). This Court granted certiorari and reversed the lower court's decision utilizing the same "test of validity of combination patents" that had been applied in *Anderson's-Black Rock. Sakraida*, 425 U.S. at 282. The Court noted that "this patent simply arranges old elements with each performing the same function it had been known to perform" and that the overall combination produced no effect that could "properly be characterized as synergistic." *Id.* "Such combinations," the Court held, "are not patentable under standards appropriate for a combination patent." *Id.* Again, the Court invalidated patent claims under § 103 without making any findings showing a teaching, suggestion, or motivation to configure pre-existing dairy barn structures in the particular claimed manner, and *notwithstanding* a lower court conclusion that there was no "suggestion" to make the particular configuration claimed in the asserted patent.

The decision below is irreconcilable with each and every one of the above-cited cases applying § 103. As those decisions demonstrate, a court properly *can*—as this Court so often *has*—

declare claimed subject matter obvious and unpatentable without making "specific findings showing a teaching, suggestion, or motivation to combine prior art teachings in the particular manner claimed by the patent at issue." (Pet. App. 16a.) In numerous circumstances, including those involving "combination" patent claims, the presence or absence of hypothetical motivation to make a particular claimed subject matter is simply extraneous to whether it "lies beyond the skill of the calling." *Graham*, 383 U.S. at 15 n.7.

Ever since *Hotchkiss*, this Court has assessed the patentability of claimed subject matter by reference to whether a person having ordinary skill in an art would have been *capable* of adapting existing technology to achieve a desired result (e.g., making a *clay* door knob having a threaded shank), not whether such a person would have had *motivation* to adapt existing technology to achieve a desired result. Patentable inventions expand the capabilities of the art; unpatentable changes do not.

The distinction between capability and motivation was explained in *Knapp v. Morss*, 150 U.S. 221 (1893), where patent claims describing an adjustable dress form were held invalid notwithstanding the patentee's contention that he was the first to think of utilizing pre-existing braces and sliding blocks for that end result.[18] The Court explicitly rejected the claimed absence of motivation to make the claimed invention as a basis for sustaining the patent (*id.* at 227-28):

---

[18] *Cf. Markman v. Westview Instruments, Inc.*, 517 U.S. 370, 373 (1996) ("A claim covers and secures a process, a machine, a manufacture, a composition of matter, or a design, but *never the function or result of either*, nor the scientific explanation of their operation") (emphasis added) (quoting 6 E. Lipscomb, *Walker on Patents* § 21:17 (3d ed. 1985)); *Diamond v. Diehr*, 450 U.S. 175, 182 n.7 (1981) ("It is for the discovery or invention of some practical method or means of producing a beneficial result or effect, that a patent is granted, and not for the result or effect itself.") (quoting *Corning v. Burden*, 56 U.S. (15 How.) 252, 267-68 (1854)).

> The use and purpose sought to be accomplished by the Hall patent was the radial expansion of the dress form, but it is well-settled by the authorities that the end or purpose sought to be accomplished by the devices is not the subject of a patent. The invention covered thereby must consist of a new and useful means of obtaining that end. . . . Tested by these authorities, the validity of the patent in question must be ascertained, not from a consideration of the purposes sought to be accomplished, but of the means pointed out for the attainment thereof; and if such means, adapted to effect the desired results, do not involve invention, they can derive no aid or support from the end which was sought to be secured.

What this Court has called "the test of validity of combination patents," *Sakraida*, 425 U.S. at 282 (quoting *Anderson's-Black*,, 396 U.S. at 60), is simply a particularized application of the principle that one cannot patent something that a hypothetical person having ordinary skill in an art could "readily" make or do in the service of a desired result. *Cf. Bonito Boats, Inc. v. Thunder Craft Boats, Inc.*, 489 U.S. 141, 150 (1989) (stating that § 103 precludes patent protection for subject matter that "could readily be deduced from publicly available material by a person of ordinary skill in the pertinent field of endeavor").

That which is "obvious" to the statutory "person having ordinary skill in the art" includes far more than what a skilled person might be motivated to make at a given point in time. The statutory person having ordinary skill in the art is deemed by law to know *how* to deploy existing technology for its known uses and capabilities, and to know *what* a "mere aggregation," *Lincoln Eng'g*, 303 U.S. at 549, of pre-existing components will comprise. These are the premises behind the Court's repeated holdings that a patent cannot rightly issue for "a combination which only unites old elements with no change in their respective functions." *Sakraida*, 425 U.S. at 281 (quoting *Great Atl.*, 340 U.S. at 152).

Where prior art *does* teach or suggest that particular means or methods can be utilized to achieve a given objective, that of course is a basis on which a court can rightly conclude that subject matter

claimed in a patent would have been obvious and, therefore, cannot be patented.[19] But as the Solicitor General has rightly pointed out, "[t]he Federal Circuit's test departs from this Court's precedents because it treats [that] particular method of demonstrating obviousness . . . as the *exclusive* means of showing obviousness." Solicitor General Amicus Brief at 13 (emphasis in original). In so constraining the authority of courts to declare claimed subject matter obvious, the Federal Circuit has dramatically departed from this Court's precedents.

B. The Teaching-Suggestion-Motivation Test Is Built on a Rejection of This Court's Precedents.

Shortly after its creation in 1982, the Federal Circuit made two important decisions that defied long-established precedent of this Court. First, in 1983, the Federal Circuit asserted that:

> There is *no warrant* for judicial classification of patents, whether into 'combination' patents and some other unnamed and undefined class or otherwise. *Nor is there warrant* for different treatment or consideration of patents based on a judicially devised label. Reference to 'combination' patents is, moreover, *meaningless*.

Stratoflex, Inc. v. Aeroquip Corp., 713 F.2d 1530, 1540 (Fed. Cir. 1983) (emphasis added); *see also Medtronic, Inc. v. Cardiac*

---

[19] *See, e.g., Mandel Bros. v. Wallace*, 335 U.S. 291, 296 (1948) (invalidating claims describing anti-perspirant composition comprising urea, where given the stated objective (diminished corrosiveness) and prior knowledge, a skilled artisan "would naturally and spontaneously have tried urea" as an additive); *Sinclair & Carroll Co. v. Inter-Chem. Corp.*, 325 U.S. 327, 333-35 (1945) (invalidating claims describing printing ink that did not dry at room temperature but dried instantly upon the application of heat, where prior art disclosed solvent having desired properties); *Dow Chem. Co. v. Halliburton Oil Well Cementing Co.*, 324 U.S. 320, 325-30 (1945) (invalidating claims describing method of using corrosion inhibitor to protect equipment used in oil well equipment, where prior art taught use of inhibitor to protect other sorts of equipment).

Pacemakers, Inc., 721 F.2d 1563, 1566 (Fed. Cir. 1983) ("It but *obfuscates* the law to posit a non-statutory, judge-created classification labeled '*combination patents*'") (emphasis added).

With these assertions the Federal Circuit boldly repudiated the "test of validity of combination patents" that this Court had applied in *Sakraida*, *Anderson's-Black*, and numerous prior precedents over a 100+ year period (*see* note 17 *supra*), as well as the extensive judicial experience that had led to the formulation of that "test." *See Sakraida*, 425 U.S. at 281 ("Courts should scrutinize combination patent claims with a care proportioned to the difficulty and improbability of finding invention in an assembly of old elements") (quoting *Great Atl.*, 340 U.S. at 152).

The second watershed event was the Federal Circuit's re-interpretation of § 103 as purportedly *precluding* courts or the PTO from concluding that a claimed invention would have been obvious at the time of its making in the absence of some proven teaching, suggestion, or motivation to make the particular claimed subject matter. Notwithstanding that this Court, in *Dann v. Johnston*, 425 U.S. 219 (1976), had reversed the CCPA and held that claimed subject matter was unpatentable under § 103 despite the CCPA's view that cited prior art was "not suggestive of the subject matter of the appealed [patent] claims," *In re Johnston*, 502 F.2d 765, 772 (C.C.P.A. 1974), the Federal Circuit held that "teachings of [prior art] references can be combined *only* if there is some suggestion or incentive to do so." *ACS Hosp. Sys., Inc. v. Montefiore Hosp.*, 732 F.2d 1572, 1577 (Fed. Cir. 1984) (emphasis in original). By 1985, the rule had achieved its canonical form, which requires reversal of any district court holding of obviousness unless the district court has "elucidate[d]" "factual teachings, suggestions or incentives from th[e] prior art that show[] the propriety of [the patented] combination." *Ashland Oil v. Delta Resins & Refractories*, 776 F.2d 281, 297 (Fed. Cir. 1985).

The repudiation of this Court's approach to determining the validity of "combination" patent claims, coupled with the Federal Circuit's radical re-interpretation of § 103(a) as purportedly *requiring* a court to uphold patent claims absent clear and

convincing evidence of motivation to modify or combine prior art in a particular manner, led to the death of this Court's precedents in *Sakraida, Johnston*, and *Anderson's-Black Rock* as viable precedents on which businesses could rely. The effect was not particularly subtle.

According to *Shepard's Citations*, majority opinions in the regional circuits cited *Sakraida* at least fifty-nine (59) times in the approximately six-year period between 1976 and 1982. Thus, *Sakraida* was being cited approximately ten (10) times per year by the regional circuit courts. In the 24 years since its creation, Federal Circuit majority opinions have cited *Sakraida* only four (4) times, with the last citation in a majority opinion occurring now more than 16 years ago. Moreover, in none of those four cases does the Federal Circuit apply the holding of *Sakraida*. Instead, the citations are typically disapproving references to precedents relied on by district courts or to arguments made by the party who would lose on appeal.[20] Citations to *Johnston* and *Anderson's-Black Rock* show similar patterns.[21]

---

[20] *See, e.g., Ashland Oil*, 776 F.2d at 306 n.43 (noting that the district court had relied on *Sakraida* and reversing); *Interconnect Planning Corp. v. Feil*, 774 F.2d 1132, 1143 (Fed. Cir. 1985) (noting that defendants had raised arguments based on *Sakraida* and rejecting those arguments); *Medtronic*, 721 F.2d at 1566 (noting that the district court had quoted *Sakraida* but concluding that "[w]e cannot construe that statement [taken from *Sakraida*'s holding] as a rule of law applicable broadly to patent cases because virtually every claimed invention is a combination of old elements"). In *Merck & Co. v. Biocraft Laboratories, Inc.*, 874 F.2d 804 (Fed. Cir. 1989), the court held that a claimed drug composition was "suggested" by a prior art patent, *id.* at 807, and discounted a patentee's claim of "synergistic effect" based in part on *Sakraida*, but maintained its rejection of "synergism" as ever being "a requirement of non-obviousness," *id.* at 808.

[21] Prior to the creation of the Federal Circuit, both decisions had been cited by the regional circuits dozens of times. The Federal Circuit has cited *Anderson's Black Rock* only twice, in both instances disapproving of district courts that had relied on the case. *See Fromson v. Advance Offset*

The Federal Circuit's treatment of this Court's case law has not escaped the attention of lawyers and writers in the field. In the words of a leading patent law casebook, "[i]n its early decisions, the Federal Circuit essentially repudiated the holdings of *Anderson's-Black Rock* and *Sakraida*." Martin J. Adelman, Randall R. Rader, John R. Thomas & Harold C. Wegner, CASES AND MATERIALS ON PATENT LAW 345 (2d ed. 2003). (This casebook is co-authored by Judge Randall Rader who currently sits on the Federal Circuit.) Many other commentators have reached similar conclusions. Those commentators describe the Federal Circuit as having "neatly abolished," "ignored," and "dismiss[ed]" Supreme Court precedent, as exemplified by the quotations below:

> "[T]he Federal Circuit has neatly abolished such Supreme Court pronouncements [on obviousness] as ... [listing the test applied in *Sakraida*, among others]. ... The end result is that the Federal Circuit has expressly dismantled many of the mechanisms the Supreme Court relied upon when deciding obviousness questions." Paul M. Janicke, *The Federal Circuit and Antitrust: To Be or Not to Be: The Long Gestation of the U.S. Court of Appeals for the Federal Circuit (1887-1982)*, 69 Antitrust L.J. 645, 661-62 (2002).
>
> "The impact of *Anderson's-Black Rock* and *Sakraida*, however, has not been significant. The Court of Appeals for

---

(..continued)

Plate, 755 F.2d 1549, 1557 (Fed. Cir. 1985); *Gardner v. TEC Sys., Inc.*, 725 F.2d 1338, 1343 (Fed. Cir. 1984). Prior to this year, only one majority opinion for the Federal Circuit had cited *Dann v. Johnston*, and the reference merely mentioned that the Court had declined to decide the case on patent subject matter (§ 101) grounds (which had also been argued in briefs of the case). *See State St. Bank & Trust Co. v. Signature Fin. Group*, 149 F.3d 1368, 1375 n.12 (Fed. Cir. 1998). After this Court issued its CVSG order in this case, the Federal Circuit has cited *Dann v. Johnston* as providing authority for the teaching-suggestion-motivation test. *See In re Kahn*, 441 F.3d 977, 986-87 (Fed. Cir. 2006). This interpretation of *Dann* does not seem to have ever previously occurred to the court.

the Federal Circuit, which exercises exclusive jurisdiction over patent appeals, essentially has ignored these decisions...." A. Samuel Oddi, *Beyond Obviousness: Invention Protection in the Twenty-First Century*, 38 Am. U. L. Rev. 1097, 1123 (1989).

"In rejecting 'synergism' as a requirement of invention, and the notion of a separate category of 'combination patents,' the *Stratoflex* court [*Stratoflex, Inc. v. Aeroquip Corp.*, 713 F.2d 1530 (Fed. Cir. 1983)] confronted substantial Supreme Court authority. The Court had *historically* held mechanical inventions that combined old elements—'combination' patents—to a more stringent standard than other inventions." Paul Goldstein, COPYRIGHT, PATENT, TRADEMARK & RELATED STATE DOCTRINES 459 (2002).

"The Federal Circuit simply ignored without comment these intervening opinions [in *Anderson's-Black Rock* and *Sakraida*] ...." Roger E. Schechter & John R. Thomas, INTELLECTUAL PROPERTY: THE LAW OF COPYRIGHTS, PATENTS & TRADEMARKS § 17.3.2.1, at 380 (2003).

"Completely dismissing the Supreme Court's 'synergistic results' rule, the Federal Circuit requires that for a combination invention to be obvious, the suggestion or motivation to make the specific combination must be found in the prior art." Philippe Ducor, *Recombinant Products and Nonobviousness: A Typology*, 13 Santa Clara Computer & High Tech. L. J. 1, 58 (1997).

The divergence between the Federal Circuit's and this Court's precedents is so extreme that one recent commentator made what can only be described as an unusual observation following this Court's 2002 ruling in *Holmes Group, Inc. v. Vornado Air Circulation Sys., Inc.*, 535 U.S. 826 (2002). *Holmes Group* restored regional circuit jurisdiction over certain cases involving patent law counterclaims, and the commentator worried that the decision was likely to generate new circuit conflicts because a regional circuit "may decide that it is bound to follow [Supreme Court] pronouncements" on § 103, even those that had been "flatly

rejected" by the Federal Circuit. *See* Elizabeth I. Rogers, *The Phoenix Precedents: The Unexpected Rebirth of Regional Circuit Jurisdiction Over Patent Appeals and the Need for a Considered Congressional Response*, 16 Harv. J. Law & Tech. 411, 459 (2003).

The decision below well exemplifies the Federal Circuit's overt rejection of this Court's precedents. In its Brief to the Federal Circuit, Petitioner devoted an entire section to *Sakraida* and its many predecessors in this Court's precedents. (*See* Pet. C.A. Br. 47-50.) Yet in the decision below, the Federal Circuit did not cite, distinguish, or even acknowledge the existence of those Supreme Court precedents.

C. The Teaching-Suggestion-Motivation Test Effectively Guts § 103(a) as a Meaningful Defense to Liability for Alleged Patent Infringement.

The Federal Circuit's divergence from this Court's precedent is far more than a matter of semantics. The Federal Circuit teaching-suggestion-motivation test imposes enormous burdens on both the PTO and on industry. These burdens flow from the extremely high cost of litigating a patent case through an entire jury trial on all relevant issues, including validity, infringement, and damages issues. The procedural posture of the present case provides the Court with an invaluable opportunity to observe, in a very concrete way, these deleterious effects.

Last year, this Court called for the views of the Solicitor General prior to acting on the petition for a writ of certiorari filed in this case. After several months of consideration, the Solicitor General this year filed a brief representing the views of the United States, including the PTO's views. With the benefit of the record developed in the District Court (including the Asano prior art pedal, which the PTO had not considered while examining Engelgau's patent application),[22] the government's expert patent agency now

---

[22] During the prosecution of the Engelgau patent, the PTO took the position that attaching a pre-existing pedal position sensor to the support

believes that claim 4 of the Engelgau patent should never have been allowed, and that the claim should be invalidated on summary judgment. Yet under the teaching-suggestion-motivation test applied below, the Federal Circuit held that Petitioner had purportedly "failed to make out a *prima facie* case of obviousness." (Pet. App. 14a.) The Federal Circuit accordingly vacated the District Court's grant of summary judgment of invalidity and remanded "for further proceedings on the issue of obviousness, and, if necessary, proceedings on the issues of infringement and damages." (*Id.* at 17a.)

The "teaching-suggestion-motivation test" causes immense harm not merely because it purports to force the PTO to issue, and courts to uphold, patents on subject matter that may differ from prior art in only trivial respects, but also because the test renders summary judgment all but unattainable on § 103 issues and has the practical effect of stripping courts of significant and traditional authority exercised in determining the ultimate question of patent validity.

(..continued)

bracket of a pre-existing adjustable pedal "would have been obvious" (JSA 131), and the PTO accordingly rejected claims that Respondents originally made to such a "combination." *See* 298 F. Supp. 2d at 595 (Pet. App. 44a-46a). To procure allowance of the Engelgau patent, Respondents amended what became claim 4 of the Engelgau patent to recite a pivot whose position remains constant while the pedal arm moves during adjustment (JSA 137), and suggested that no such *type* of adjustable pedal assembly existed in the prior art to the Engelgau patent. In fact, as both lower courts concluded, and as the Solicitor General has informed the Court, the Asano pedal discloses an adjustable pedal assembly having the very constant position pivot that claim 4 of the Engelgau patent describes.

1. The Teaching-Suggestion-Motivation Test Effectively Precludes Use of Summary Judgment and Strips Courts of Authority to Determine the Ultimate Question of Patent Validity.

As this case demonstrates, even where there is no genuine issue of fact with regard to the scope and content of the prior art, the level of skill in the art, or the extent of any differences between claimed subject matter and the prior art, the "teaching-suggestion-motivation test" still virtually precludes summary judgment on whether claimed subject matter fails the § 103(a) condition for patentability in a given case.[23]

According to the decision below, a patent applicant or patentee can purportedly avoid the invalidating legal effect of an otherwise undisputed prior art reference (in this case, the 1991 Asano pedal), and claim rights to exclude use of subject matter that differs from prior art in only trivial respects (in this case, the combination of an Asano adjustable pedal assembly with an off-the-shelf pedal position sensor), through the simple expedient of asserting that a hypothetical person having ordinary skill in the art, in the particular circumstances "confronted" by the alleged inventor,[24] would have

---

[23] "Summary judgment procedure is properly regarded not as a disfavored procedural shortcut, but rather as an integral part of the Federal Rules as a whole, which are designed to 'secure the just, speedy and inexpensive determination of every action.'" *Celotex Corp. v. Catrett*, 477 U.S. 317, 327 (1986) (quoting Federal Rule of Civil Procedure 1). Summary judgment procedure is especially important in patent litigation which this Court has correctly noted "is a very costly process," *Blonder-Tongue Labs., Inc. v. University of Ill. Found.*, 402 U.S. 313, 334 (1971), and the mere threat of which can "often" lead defendants to "decide that paying royalties under a license or other settlement is preferable to the costly burden of challenging the patent." *Id.* at 338.

[24] The Federal Circuit requires that the hypothetical person of ordinary skill in the art be posited as being "confronted with the same problems as the [alleged] inventor." (Pet. App. 7a (quoting *In re Rouffet*, 149 F.3d 1350, 1357 (Fed. Cir. 1998).) The court applied this rule below

lacked "motivation" to combine or assemble particular prior art references in "the particular manner claimed" in a patent or patent application. (Pet. App. 7a.)

If such an assertion is made, then, according to the decision below, the ultimate question of patent validity under § 103(a) effectively ceases to be "one of law," *Graham*, 383 U.S. at 17, but is made to depend instead on the outcome of hugely costly[25] and unpredictable litigation concerning the hypothetical motivations of a person having ordinary skill in the art. In place of a legal analysis that a court can resolve, similarly to how the PTO assesses patentability during the prosecution of a patent,[26] the teaching-suggestion-motivation test purports to require full jury trials to determine the preemptive effect of undisputed prior art. According to

---

(..continued)

even though claim 4 of the Engelgau patent is worded so broadly as to describe an adjustable pedal assembly that, according to Respondents themselves, "would not have solved" those alleged "problems." (JA 141a.)

[25] *See* U.S. Federal Trade Comm'n, *To Promote Innovation: The Proper Balance of Competition and Patent Law and Policy* ("FTC Report"), chap. 5, p. 3 (2003) (noting that the record of the agency's investigation on the patent system was "replete with discussion of the cost of litigation and its potential to operate as a drag on the [patent] system"). A 2003 study by the American Intellectual Property Law Association found that, patent infringement cases with $1 million-$25 million at risk, the median cost of litigation was approximately $1 million through the discovery phase and $2 million through trial and appeal. With more than $25 million at stake, the median cost rose to $2.5 million through discovery and $4 million through trial and appeal. *Id.* at p. 3 n.11 (citing American Intellectual Property Law Ass'n, REPORT OF THE ECONOMIC SURVEY 22 (2003)).

[26] On receipt of a completed patent application disclosing an "alleged new invention," the application is examined to determine whether "it appears that the applicant is entitled to a patent under the law." 35 U.S.C. § 131. "A patent, in the last analysis, simply represents a legal conclusion reached by the Patent Office." *Lear, Inc. v. Adkins*, 395 U.S. 653, 670 (1969).

the Federal Circuit, "[m]otivation to combine is a question of fact," and "[e]xpert testimony of a 'lack of motivation to combine and the use of hindsight by [opposing experts] constitutes substantial evidence of ~~non~~obviousness.'" *Group One Ltd.* v. *Hallmark Cards, Inc.*, 407 F.3d 1297, 1304 (Fed. Cir. 2005) (quoting earlier Federal Circuit authority).

Besides injecting enormous uncertainty into patent validity analysis and all but precluding the use of summary judgment to determine "the ultimate question of patent validity," *Graham*, 383 U.S. at 17, the teaching-suggestion-motivation test purports to enable patentees to evade meaningful judicial review of whether claimed subject matter satisfies the § 103(a) condition even where, as in this case, a defense of invalidity is grounded on prior art that the PTO never considered during the prosecution of a patent. The Federal Circuit's decision in *Group One* provides a good illustration.

In *Group One*, the patents-in-suit described a combination of pre-existing elements (specifically, a pre-existing ribbon curling apparatus combined with a pre-existing "stripping" apparatus). The accused infringer raised a defense of invalidity under § 103(a) in view of various "stripping means" references that the PTO had never considered during the prosecution of the patents-in-suit. *Group One*, 407 F.3d at 1306. Following Federal Circuit precedent, the District Court submitted the ultimate question of patent validity to a lay jury, which returned a verdict that the accused infringer "had not proven any of the asserted claims obvious by clear and convincing evidence." *Id.* at 1301.[27] The District Court then granted the accused infringer's post-trial motion for judgment as a matter of law under Federal Rule of Civil Procedure 50(b) on the basis that the asserted claims were invalid under § 103(a). *Id.* at 1302.

---

[27] As noted above (*see* note 10 *supra*), the Federal Circuit's blanket imposition of a "clear and convincing evidence" burden of proof with respect to any fact relied upon to establish any invalidity defense, exemplified by *Group One* and the decision below (Pet. App. 5a), notoriously lacks any basis in the Patent Act or precedents of this Court.

On appeal, the Federal Circuit reversed and "reinstate[d] the jury verdict that the patents were not invalid for obviousness." *Id.* at 1303. Although the jury's verdict included no explanation of its conclusion that the asserted claims had not been "proven ... obvious by clear and convincing evidence," the Federal Circuit held that the jury "may have" found[28] that there was less than clear and convincing evidence of "motivation to combine" the prior art references that the District Court had held, as a matter of law, rendered the claimed subject matter unpatentable under § 103. *Id.* at 1302. As for the point that the PTO had never considered the relied-on prior art references, the Federal Circuit stated: "we do not see how this can provide a basis for overturning the jury's factfinding." *Id.* at 1306.

Hence in the United States today, under the Federal Circuit "teaching-suggestion-motivation test," a defendant asserting a defense of invalidity under § 103(a) has no assurance that any court, at any level, will ever give the defense any independent consideration.[29] In calling for such a result, the decision below is fundamentally at odds with this Court's repeated holdings that "the ultimate question of patent validity is one of law," *Graham,* 383 U.S. at 17; *see also Sakraida,* 425 U.S. at 280 ("The ultimate test of patent validity is one of law"), and unwisely transfers decision-making authority from courts to lay juries. *Cf. Markman v. Westview Instruments, Inc.*, 517 U.S. 370, 372 (1996) ("[T]he construction of a

---

[28] Under Federal Circuit precedent, when a lay jury renders a verdict on the ultimate legal question of patent validity, post-verdict or appellate review is said to be limited to "re-creating the facts as they *may have been found* by the jury, and . . . applying the *Graham* factors to the evidence of record." *McGinley v. Franklin Sports, Inc.*, 262 F.3d 1339, 1351 (Fed. Cir. 2001) (emphasis added).

[29] *E.g., MercExchange, L.L.C. v. eBay, Inc.*, 401 F.3d 1323, 1331 (Fed. Cir. 2005) (affirming jury verdict on ultimate question of patent validity on the basis that there was "substantial evidence to support the jury's finding of nonobviousness," specifically, expert testimony regarding a lack of hypothetical "motivation" to modify a prior art computer system to behave as claimed in asserted patent), *rev'd on other grounds*, 126 S. Ct. 1837 (2006).

patent, including terms of art within its claim, is exclusively within the province of the court.").

As reflected in numerous decisions of this Court upholding or invalidating patent claims (*see* notes 14, 16-17 and accompanying text, *supra*), the ultimate question of patent validity is determined with reference to a fictional construct – a hypothetical person who has "ordinary skill in the art" and who further is deemed, by law, to have perfect knowledge of all information and technology, located anywhere in the world, that constituted "prior art" in the field of an alleged "invention" at the time it was made. Section 103(a) requires that the patentability of claimed subject matter be assessed against "the prior art," not just against *that portion* of the prior art that a lay jury might be convinced, in litigation, a hypothetical "person having ordinary skill in the art," in contrived and imaginary circumstances, might have been "motivated" to consider within the field of a claimed "invention."

Whether subject matter claimed in a patent should be deemed "non-obvious subject matter," and thus a basis for a grant of economic rights to exclude competition backed up by potent injunctive and monetary remedies, calls for a qualitative assessment of both the nature and the extent of "the differences between the subject matter sought to be patented and the prior art," 35 U.S.C. § 103(a), and the formation of a judgment whether the claimed subject matter was, at the time of its conception, "beyond the skill of the calling," *Graham*, 383 U.S. at 15 n.7. *Cf. United States v. Adams*, 383 U.S. 39, 51-52 (1966) (upholding claims describing a battery comprising magnesium and cuprous chloride electrodes whose operating characteristics were "unexpected" and "far surpassed then-existing wet batteries," and whose design was contrary to "long-accepted factors" that would "deter any investigation" into the claimed combination).

In an appropriate case,[30] "[s]uch secondary considerations as commercial success, long felt but unsolved needs, failure of others, etc., might be utilized to give light to the circumstances surrounding the origin of the subject matter sought to be patented." *Graham*, 383 U.S. at 17-18. But whether such considerations "should, in a close case, tip the scales in favor of patentability," *Goodyear Tire & Rubber Co. v. Ray-O-Vac Co.*, 321 U.S. 275, 279 (1944) (upholding claims describing leak proof battery), their weighing and evaluation is an aspect of "the ultimate question of patent validity," *Graham*, 383 U.S. at 17, which this Court's precedents have long treated as a question of law for courts, not lay juries, to decide.[31]

To the extent that prior art can be characterized as providing no teaching, suggestion, or motivation to make particular claimed subject matter, that characterization may support a legal conclusion of patent validity in a given situation, *see, e.g., Adams*, 383 U.S. at 52-53 (absence of prior art teaching or suggestion to use magnesium

---

[30] This Court has repeatedly held that the commercial success of a claimed "invention" is relevant to patentability "only in a close case where all other proof leaves the question of invention in doubt." *Dow Chem. Co. v. Halliburton Oil Well Cementing Co.*, 324 U.S. 320, 330 (1945). *See also Jungersen v. Ostby & Barton Co.*, 335 U.S. 560, 567 (1949); *Toledo Pressed Steel Co. v. Standard Parts, Inc.*, 307 U.S. 350, 356-57 (1939). *Cf. Dann v. Johnston*, 425 U.S. 219, 230 n.4 (1976) (stating, "commercial success without invention will not make patentability") (quoting *Great Atl.*, 340 U.S. at 153).

[31] *See, e.g., Sakraida*, 425 U.S. at 282-83 (invalidating claims describing assembly of pre-existing dairy barn structures; despite commercial benefits, "[t]hese desirable benefits 'without invention will not make patentability'" (quoting *Great Atl.*, 340 U.S. at 153)); *Anderson's-Black*, 396 U.S. at 61 (invalidating claims describing assembly of radiant burner and paving apparatus; despite claimed fulfillment of long-felt need and commercial success, "those matters 'without invention will not make patentability'" (quoting *Great Atl.*, 340 U.S. at 153)); *Graham*, 383 U.S. at 35-37 (invalidating claims describing pump sprayer; despite claimed failures of others and commercial success, "these factors do not, in the circumstances of this case, tip the scales of patentability").

electrode in water-activated battery supported a legal conclusion of patent validity), or it may have little or no bearing on a legal conclusion of patent validity. *See, e.g.*, *Sakraida*, 425 U.S. at 281-83 (invalidating patent claims describing dairy barn structures without reference to any "teaching, suggestion, or motivation" to configure the structures in the particular manner claimed).[32]

But in any event, the character of "the ultimate question of patent validity" as being "one of law," *Graham* 383 U.S. at 17, is rendered no less so by a patentee's or patent applicant's assertion that a person having ordinary skill in the art would have lacked motivation to make particular claimed subject matter. To the extent that such an assertion can be said to give rise to an issue of some sort, it is not an issue of fact that precludes a court from granting summary judgment under Federal Rule of Civil Procedure 56(c).

2. The Teaching-Suggestion-Motivation Test Converts § 103(a) Into a Condition for Challenges to Patentability.

Section 103 states a "condition for patentability." The statute implements "congressional directions that inquiries into the obviousness of the subject matter sought to be patented are a *prerequisite* to patentability." *Graham*, 383 U.S. at 17 (emphasis added).[33] The statute does not, as the decision below erroneously assumes, *presuppose* that *all* novel subject matter is patentable, unless the PTO or an accused infringer can prove some teaching,

---

[32] *Sakraida* notably reversed a lower court judgment that had held, similarly to the decision below, that "references may not be combined to anticipate the patented claim unless they *suggest* to one with ordinary skill in the art doing what the applicant has claimed." *Ag Pro, Inc. v. Sakraida*, 474 F.2d 167, 171 (5th Cir. 1973) (emphasis added), *rev'd*, 425 U.S. at 281-83.

[33] *See also Dann*, 425 U.S. at 225 ("As a judicial test, 'invention'—i.e., 'an exercise of the inventive faculty,' *McClain v. Ortmayer*, 141 U.S. 419, 427 (1891)—has long been regarded as an absolute prerequisite to patentability.").

suggestion, or motivation to make the particular claimed subject matter.

So here, in claim 4 of the Engelgau patent, the Respondents' assignor broadly described the alleged invention as comprising a combination of two pre-existing components, namely, (i) a pre-existing type of adjustable accelerator pedal assembly, and (ii) a pre-existing type of pedal position sensor. Absent some demonstration *by the applicant* that the conception of this claimed subject matter required "an exercise of the inventive faculty," *Dann*, 425 U.S. at 225 (quoting *McClain*, 141 U.S. at 427), the PTO could properly conclude—as it has in this very case (*see* Solicitor General Amicus Brief at 17)—that claim 4 of the Engelgau patent at best describes "the work of the skilful mechanic, not that of the inventor," *Sakraida*, 425 U.S. at 282 (quoting *Hotchkiss*, 52 U.S. (11 How.) at 267). A court may similarly reject, as unsupported or legally erroneous, an applicant's assertion that claimed subject matter was an "invention" or "non-obvious subject matter" at the time the subject matter was conceived by the applicant. *Id.* at 281-83.[34]

By re-interpreting § 103(a) as providing, not a "condition for patentability" (as its title states, and as this Court has consistently interpreted the statute as providing), but rather a "condition for *challenges* to patentability," the "teaching-suggestion-motivation test" purports to force issuance of patents for *any* claimed permutation of existing technology that is not "identically disclosed or described as set forth in section 102," 35 U.S.C. § 103(a), unless the PTO proves that a hypothetical person having ordinary skill in the art would have had "motivation" to make particular claimed subject matter when an applicant made the alleged invention. *See, e.g., In re*

---

[34] Under 35 U.S.C. § 282, claims in issued patents are "presumed valid"; however, this statutory presumption is just that, a presumption, and it in no way limits the power of a court to disagree with an Examiner's legal conclusion as to the patentability of particular claimed subject matter under 35 U.S.C. § 103(a). *E.g., Graham*, 383 U.S. at 34 ("We are at a loss to explain the Examiner's allowance on the basis of such a distinction").

Lee, 277 F.3d 1338, 1343-45 (Fed. Cir. 2002). The teaching-suggestion-motivation test thus gives rise to enormous incentives to load up patent applications with large numbers of slightly different claims, each one of which, under Federal Circuit precedent, purportedly *must* be allowed unless the PTO can demonstrate the existence of a "teaching, suggestion, or motivation" to make the *particular* claimed subject matter.

Two cases that came before this Court last Term well illustrate the effect. In *eBay, Inc. v. MercExchange, L.L.C.*, 126 S. Ct. 1837 (2006), the Respondents had parlayed a single patent application into at least three patents (U.S. Patent Nos. 5,845,265 (1998); 6,085,176 (2000); 6,202,051 (2002)) containing no fewer than 154 claims describing different details of a method and apparatus for displaying and selling items online. The *MercExchange* patents were concise, however, compared to the patents at issue in the recent "BlackBerry" litigation. *See NTP, Inc. v. Research in Motion, Ltd.*, 418 F.3d 1282 (Fed. Cir. 2005), *cert. denied*, 126 S. Ct. 1174 (2006). Just one of the patents in that case had more than 600 different claims whose length easily exceeded the entirety of the technical disclosure. *See* U.S. Pat. No. 6,317,592 B1 (2001) (cols. 1-28 setting forth technical disclosure; cols. 28-86 setting forth 665 different claims).

Against such patents, the incentive to settle a lawsuit for alleged infringement can be overwhelming. The rigors of the "teaching-suggestion-motivation test" apply separately to each and every claimed permutation, and since the "teaching-suggestion-motivation test" effectively precludes summary judgment in all but the most extreme cases, an accused infringer typically has to battle many permutations. And even if the defendant succeeds in invalidating several or even dozens of the claims, all can be lost if the jury finds for one permutation that the accused infringer has not demonstrated by clear and convincing evidence that the prior art did not contain a teaching, suggestion, or motivation to make the particular claimed subject matter.

D. Under This Court's Precedents Claim 4 of the Engelgau Patent Is Invalid.

As both lower courts in this case determined, claim 4 of the Engelgau patent is worded so broadly and abstractly that it describes (i) a pre-existing type of adjustable accelerator pedal assembly (namely, the Asano pedal assembly), attached in a known way to (ii) a pre-existing type of pedal position sensor (*e.g.*, the CTS 503 Series sensor installed in 1994 GM pickup trucks), with the combined elements performing exactly the same function, and producing exactly the same effect, as each was originally known and designed to do. (*See* JSA 81 (computer animation comparing words of claim 4 to undisputed prior art references).)

Under applicable precedents of this Court, no extended analysis was or is necessary to decide that this claim is invalid under at least 35 U.S.C. § 103(a). Claim 4 of the Engelgau patent unquestionably falls within the principle that "[a] patent for a combination which only unites old elements with no change in their respective functions. . . obviously withdraws what already is known into the field of its monopoly and diminishes the resources available to skillful men." *Sakraida*, 425 U.S. at 281 (quoting *Great Atl.*, 340 U.S. at 152). Under this Court's precedents, that is the end of the matter.

II. THE COURT SHOULD ADHERE TO ITS PRECEDENTS AND REJECT THE TEACHING-SUGGESTION-MOTIVATION TEST.

This case provides a stark and relatively unusual choice for the Court between adhering to a long line of this Court's own precedents versus abandoning those precedents and endorsing the experiment of a lower court. Just last Term, this Court reiterated its view that "[c]onsiderations of *stare decisis* are particularly forceful in the area of statutory construction, especially when a unanimous interpretation of a statute has been accepted as settled law for several decades." *IBP, Inc. v. Alvarez*, 126 S. Ct. 514, 523 (2006). *Graham*, *Calmar*, *Anderson's-Black*, *Dann*, and *Sakraida* were all unanimous decisions of this Court. Moreover, many decisions on which those precedents were based, including *all* of this Court's precedents applying the "combination" patent rule cited in footnote 17, *supra*, were decided unanimously.

All of this was settled law until the Federal Circuit began disregarding this Court's precedents in the early 1980s, a mere seven years after this Court's most recent unanimous pronouncement in *Sakraida*. The Federal Circuit should not be held to a lower standard of respect for this Court's statutory precedents than the standard that this Court applies to itself. Indeed, this point is especially important now, because this Court has decided a number of patent cases in recent years. Such decisions as *Dickinson v. Zurko*, 527 U.S. 150 (1999), and *Warner-Jenkinson Co. v. Hilton Davis Chemical Co.*, 520 U.S. 17 (1997), are about the same age as *Sakraida* was when the Federal Circuit began to ignore it. Acceptance of the Federal Circuit's departure from Supreme Court precedent would create massive uncertainty and instability in the law; litigants would have to be constantly guessing which Supreme Court patent decisions were ripe for lower court *sub silentio* non-acquiescence.

This Court's precedents on the standard of patentability also contain the collective wisdom of generations of Justices and lawyers. The rule applied in *Sakraida*, for example, would have been well-known to the lawyers of Alexander Graham Bell, Thomas Edison, and Wilbur and Orville Wright. *See* 1 William C. Robinson, THE LAW OF PATENTS FOR USEFUL INVENTIONS § 154, at 217-19 (1890). Any judicial changes from these long-accepted and applied rules should proceed incrementally, in the common-law method, not by sudden disregard for an entire corpus of case law. If such dramatic alterations are wise or necessary, it is the office of the legislature to make the change.

Nevertheless, if this Court were open to considering a wholesale reformulation of its traditional patentability standard, the teaching-suggestion-motivation test provides an unattractive alternative. The doctrine undermines basic policies undergirding § 103(a), and its failings have been widely recognized.

A. The Teaching-Suggestion-Motivation Test Ill Serves the Important Goals That § 103(a) Is Designed to Implement.

The reason for limiting patents to "non-obvious subject matter" can be seen most easily by contrasting patent with copyright law. In copyright, the standard for obtaining intellectual property rights has

been set "extremely low." *Feist Publ'n, Inc. v. Rural Tel. Serv. Co.*, 499 U.S. 340, 345 (1991). While the copyright standard requires some "spark" of creativity, "[t]he vast majority of works make the grade quite easily, as they possess some creative spark, 'no matter how crude, humble or obvious' it might be." *Id.* at 345 (quoting 1 M. Nimmer & D. Nimmer, NIMMER ON COPYRIGHT § 1.08[C][1] (1990)).

Two fundamental differences in the scope of rights protected by copyrights and patents explain the difference between the standards of creativity applicable in each area. First, unlike a patent, a copyright prevents only copying of the protected work. It grants no rights over independent creations of similar or even identical works. A copyright on a triviality that can be independently created by many individuals will thus have a limited economic impact. Even if people are willing to pay for the triviality, each independent creator will be in competition with others. Second, copyrights protect only the particular expressions of ideas, but patent rights offer protection at a much broader and more conceptual level. Thus, the first writer to use a telephone as a crucial element in a story cannot prevent other writers from using a telephone as an important element in advancing a plot in another work. A patent on a telephone, however, can—and in fact did—grant rights covering all practical uses of telephone technology during the term of the patent. *See The Telephone Cases*, 126 U.S. 1, 532-33 (1888) (sustaining Bell's broad patent on basic telephone technology).

The justification for patent law's relatively high standard of creativity can thus be accurately summed up in the phrase "more rights, more responsibilities." A patent grants much more dramatic rights to limit the economic activity of others, and so the law rightly demands more from patent applicants than from authors.

Section 103(a) is designed to preclude patent protection for *trivial* new developments and adaptations of technology. It is important to stress that *trivial* here refers to *technical, not economic*, triviality. "A patent on a technically trivial development may still be an extremely valuable right that can be commercially exploited." Robert P. Merges & John F. Duffy, PATENT LAW & POLICY 644 (3d

ed. 2002). In barring issuance of patents for such technologically trivial developments, the statutory condition for patentability serves at least three distinct goals of the patent system. The "teaching-suggestion-motivation test" serves each of those goals extremely poorly.

First, by limiting patent protection to "non-obvious subject matter," § 103(a) prevents the legal system from burdening industry with a thicket of patents that are both economically and technologically trivial. *See* U.S. Federal Trade Comm'n, *To Promote Innovation: The Proper Balance of Competition and Patent Law and Policy* ("FTC Report"), chap. 4, at 5 (2003). For such patents, the social costs imposed by each such patent may be small, but in the aggregate they make it expensive for firms to search through issued patents to determine whether their technology has been patented. The teaching-suggestion-motivation test ill serves the goal of preventing such thickets because the burden on the PTO to disallow patent claims, and the burden on accused infringers to invalidate allowed claims, is so high that the rational course of action for each actor is not to challenge patentability. Thus, PTO examiners may allow hundreds of slightly different patent claims because fighting patentability, under Federal Circuit precedent, requires the examiners to "'connect the dots ... very, very clearly.'" *Id.* at 11 (quoting PTO Deputy Commissioner for Patent Examination Policy Stephen Kunin).[35] Similarly, accused infringers may settle rather than

---

[35] Illustrative is the case of *In re Dembiczak*, 175 F.3d 994 (Fed. Cir. 1999), where the Federal Circuit reversed the PTO's refusal to issue a patent on pumpkin-faced garbage bags. The PTO held it obvious to combine prior art trash bags with a prior art book on children's art, which taught how to paint a pumpkin face on a paper bag. To the PTO, the alleged invention was literally child's play. Not so for the Federal Circuit. Applying the suggestion test, the court reversed and remanded to the agency for additional fact-finding because "[n]owhere does the [PTO] Board particularly identify any suggestion, teaching, or motivation to combine the children's art references (Holiday and Shapiro) with the conventional trash or lawn bag references." *Id.* at 1000.

challenge patent validity under § 103, because Federal Circuit precedent effectively precludes summary judgment and empowers patentees to demand that the ultimate question of patent validity be submitted to a lay jury, rather than a court, on the basis of a few minutes of instruction on patent law and a "clear and convincing evidence" burden of proof.

Second, by limiting patent protection to "non-obvious subject matter," § 103 results in a sound allocation of rewards for technological developments. *See* FTC Report, chap. 4, at 4-5. Limiting patents to non-obvious subject matter at once (i) permits issuance of patents for innovations that increase the capability of an art, and (ii) precludes issuance of patents for trivial adaptations of those innovations. Alexander Graham Bell's patent on apparatus for transmitting vocal and other sounds telegraphically (U.S. Patent No. 174,465), which was held valid in *The Telephone Cases*, 126 U.S. 1, 532-33 (1888), plainly satisfied the *Hotchkiss* condition in this Court's jurisprudence, just as it would satisfy the standard codified in § 103. But that standard, as interpreted by this Court, would preclude patent protection for, say, the technologically trivial ideas of using a telephone to place business orders, to confirm a reservation, or to call mom on Mother's Day. The traditional interpretation of § 103(a), and the *Hotchkiss* condition it codified, enables developers of non-obvious subject matter to exploit their technological achievements without having to split their rewards with developers of obvious follow-on adaptations and permutations.

Third, and perhaps most importantly, by limiting patent protection to "non-obvious subject matter," § 103(a) bars issuance of patents for subject matter whose conception was not a solution to a technical problem, but a mere taking advantage of commercial opportunities created by others' technological achievements.[36] A

---

[36] *See, e.g.*, Robert P. Merges & John F. Duffy, PATENT LAW AND POLICY 655 (3d ed. 2002) (noting that "[e]xogenous economic forces, rather than technical achievement," may explain the emergence of a new combination that may be quite valuable in the market even though

good example is the historically notorious Selden patent on all automobiles having gasoline piston engines.[37]

Selden did little or nothing to develop gasoline engines. He might have been the first in this country to mount a primitive gasoline engine on a carriage, though precisely who was first is hard to determine because so many other individuals thought of the same idea at roughly the same time. Nevertheless, Selden, a patent attorney, was shrewd enough to seek immensely broad patent rights covering the combination of the new engine with the standard mechanical parts. The patent caused enormous problems in the early U.S. automobile industry until the Second Circuit held the literal reach of its broadest claim would be "invalid for want of invention" one year prior to its expiration. *See Columbia Motor Car Co. v. C. A. Duerr & Co.*, 184 F. 893, 901 (2d Cir. 1911).

(..continued)

technically trivial); William M. Landes & Richard A. Posner, THE ECONOMIC STRUCTURE OF INTELLECTUAL PROPERTY LAW 304 (Harvard 2003) (explaining that "sometimes an idea is unknown not because it would be costly to discover but because it has no value" and that "[i]f some exogenous shock gives it value, it will be discovered more or less simultaneously by a number of those who can exploit it"); John F. Duffy, *Rethinking the Prospect Theory of Patents*, 71 U. Chi. L. Rev. 439 (2004) (noting that an unexpected development like the rise of internet commerce in the mid-1990s can create many opportunities for "new but obvious ideas that have suddenly come to have evident economic value" and that, if the non-obviousness requirement is not well enforced, society could face a flood of patents that will exact a heavy price for obvious ideas).

[37] James J. Flink, THE AUTOMOBILE AGE 51 (1988) ("Probably the most absurd action in the history of patent law was the granting of United States patent number 549,160 on November 5, 1895, to George B. Selden."). This patent is used as illustrative of obviousness in Merges & Duffy, *supra*, at 644-47, and in FTC Report, Executive Summary at 3, 12, chap. 4, at 13-14 & 18. The deleterious effects of the Selden patent on the early automotive industry are detailed in William Greenleaf, MONOPOLY ON WHEELS: HENRY FORD AND THE SELDEN AUTOMOBILE PATENT (1961).

Petitioner's case, and many others, show a similar pattern: Where new technologies or needs arise, many obvious adjustments to existing technology will need to be made. Such adjustments, permutations and combinations may be new, but they are not necessarily "non-obvious." Yet it is in precisely such circumstances that the "teaching-suggestion-motivation test" fails badly: Because the conditions requiring the change are new, the prior art will not disclose the requisite teaching, suggestion, or motivation for proving the new combination obvious. With that flawed approach to determining patentability, the areas of the economy experiencing the greatest change—e.g., because of the electronics revolution or the rise of the internet—will predictably be burdened with obvious patents that may have great economic significance.

In this very case, the economic significance of claim 4 in the Engelgau patent is attributable not to Mr. Engelgau's insights into pedal mechanics but to the rise of electronic throttle control. If claim 4 is not invalidated, the owner of an Asano pedal could not adapt the pedal in conventional fashion to function with a modern car without infringing the Engelgau patent, even though an adaptation of the Asano pedal to the new conditions owes no intellectual debt to Mr. Engelgau's work.

B. The Federal Circuit's Doctrine Is a Failed Experiment.

The Federal Circuit's radical re-interpretation of § 103(a) has been in operation long enough that this Court can observe the consequences, and they are not good. The teaching-suggestion-motivation test has coincided with a massive increase in patent filings and lawsuits and widespread criticism of the United States patent system. *See, e.g.*, *Patently Ridiculous*, N.Y. Times, Mar. 22, 2006 (*available at* http://www.nytimes.com/2006/03/22/opinion/22wed1.html?ei=5090&en=90b684597ca2bd79&ex=1300683600&partner=rssuserland&emc=rss&pagewanted=print); *Patently Absurd*, Wall St. J., Mar. 1, 2006, at C-1; Michael Orey, *The Patent Epidemic*, Business Week, Jan. 9, 2006 (*available at* http://www.businessweek.com/magazine/content/06_02/b3966086.htm).

The alternative to the Federal Circuit's experiment—a return to the traditional approach to granting patents—is not only workable,

but it is the approach that continues to hold in much of the rest of the Western world.[38] These other jurisdictions borrowed their law from the precedents of this Court, which has been credited in foreign literature as having originated the obviousness doctrine. *See, e.g.*, Freidrich-Karl Beier, *The Inventive Step in its Historical Development*, 17 Int'l Rev. Indus. Prop. & Copyright L. (IIC) 301, 304 (1986) ("[T]he so-called patentability requirement was invented by the Americans, in particular the Justices of the U.S. Supreme Court in the famous case [*Hotchkiss*]."). It is therefore fair to say that Europe is adhering more closely than the Federal Circuit to the conception of obviousness disclosed in this Court's precedents. That unusual situation should end with this case.

CONCLUSION

For the reasons set forth above, this Court should reverse the judgment of the Federal Circuit.

---

[38] *European Patent Examining Guidelines for Examining in the European Patent Office*, Part C, at IV-23 (June 2005) (*available at* http://www.european-patent-office.org/legal/gui_lines/pdf_2005/guidelines_2005_e.pdf) (stating that a mere aggregation of pre-existing parts lacks an inventive step, and is therefore unpatentable, unless the interactions of the individual features produce a "synergistic effect"). That approach has also been reaffirmed by the UK House of Lords in the case of *SABAF SpA v. Meneghetti SpA* [2003] R.P.C. 14 (*available at* http://www.parliament.the-stationery-office.co.uk/pa/ld200304/ldjudgmt/jd041014/sabaf-1.htm). The prevailing law in Canada is also similar. *See Canadian Intellectual Property Office, Manual of Patent Office Practice*, ch. 15, at 15-3 (2005) (*available at* http://strategis.ic.gc.ca/sc_mrksv/cipo/patents/mopop/ch15-e.pdf) (listing as an example of obviousness, "[t]o combine old devices into a new machine or manufacture, without producing any new mode of operation").

Respectfully submitted,

James W. Dabney
Counsel of Record
1 New York Plaza
New York, New York 10004
(212) 859-8000

Stephen S. Rabinowitz
Henry C. Lebowitz
Mitchell E. Epner
Darcy M. Goddard
FRIED, FRANK, HARRIS,
SHRIVER & JACOBSON LLP

New York, New York 10004
Attorneys for Petitioner

John F. Duffy
FRIED, FRANK, HARRIS,
SHRIVER & JACOBSON
LLP
Washington, D.C. 20004

Of Counsel

August 22, 2006

1424 (10)

No. 04-1350

FILED
OCT 16 2006
OFFICE OF THE CLERK
SUPREME COURT, U.S.

IN THE

Supreme Court of the United States

KSR INTERNATIONAL CO.,
Petitioner,

v.

TELEFLEX INC., ET AL.
Respondents.

On Writ of Certiorari
to the United States Court of Appeals
for the Federal Circuit

BRIEF FOR THE RESPONDENTS

Kenneth C. Bass, III
Robert G. Sterne
STERNE, KESSLER,
GOLDSTEIN & FOX P.L.L.C.
1100 New York Ave., NW
Washington, DC 20005

Rodger D. Young
Steven Susser
David Poirier
YOUNG & SUSSER, P.C.
26200 American Drive
Suite 305
Southfield, MI 48034

Thomas C. Goldstein
(*Counsel of Record*)
Michael A. O'Shea
Garreth A. Sarosi
Christopher R. Pudelski
Sarah C. Rispin
AKIN GUMP STRAUSS
HAUER & FELD, LLP
1333 New Hampshire Ave., NW
Washington, DC 20036
(202) 887-4060

(Add'l counsel on inside cover)

October 16, 2006

WILSON-EPES PRINTING CO., INC. – (202) 789-0096 – WASHINGTON, D.C. 20001

ADDITIONAL COUNSEL TO RESPONDENTS

Samuel J. Haidle
David M. LaPrairie
HOWARD & HOWARD
ATTORNEYS, P.C.
39400 Woodward Ave.
Suite 101
Bloomfield Hills, MI 48304

Tracy L. Casadio
Elizabeth H. Rader
AKIN GUMP STRAUSS
HAUER & FELD, LLP
2029 Century Park East
Suite 2400
Los Angeles, CA 90067

QUESTION PRESENTED

Whether this Court should overturn the flexible standard that has consistently governed the determination whether a patent is obvious for the past four decades.

RULE 29.6 STATEMENT

Respondent Teleflex, Inc. has no parent corporation and no publicly held company owns 10% or more of its stock. Teleflex, Inc. is the parent company of respondent Teleflex Holding Co. and is the only publicly held company that owns 10% or more of the stock of Teleflex Holding Co.

Subsequent to the filing of the complaint in this case, Drivesol Worldwide, Inc. acquired the relevant assets of the previously named respondents, including the patent rights at issue in this case. Drivesol Worldwide, Inc. is therefore the real party in interest. Drivesol Worldwide, Inc. is wholly owned by Drivesol Intermediate Holding Corp. No publicly held company owns 10% or more of its stock.

TABLE OF CONTENTS

QUESTION PRESENTED i
RULE 29.6 STATEMENT ii
TABLE OF CONTENTS iii
TABLE OF AUTHORITIES v
BRIEF FOR THE RESPONDENTS 1
STATEMENT OF THE CASE 1
SUMMARY OF THE ARGUMENT 9
ARGUMENT 14
I. The Arguments of Petitioner and Its *Amici* Rest on an Inaccurate Caricature of the Federal Circuit's Suggestion Inquiry. 17
II. This Court's Precedents, the Text of Section 103(a), and the Purposes Underlying the Statute All Support the Federal Circuit's Established Suggestion Inquiry. 21
A. The Obviousness Inquiry Properly Focuses on the Selection of the Elements from the Prior Art and the Manner of Their Combination. 22
B. The Suggestion Analysis Properly Balances the Interests of Patentees and Those Who Would Freely Practice the Art. 27
III. Petitioner's Contrary Proposals for Overturning the Suggestion Standard Lack Merit. 31
A. Petitioner's Proposed Obviousness Standard Cannot Be Reconciled with this Court's Decisions, the Statutory Text, or the Goals that Congress Was Pursuing. 31
B. Petitioner's Reliance on this Court's Decisions in *Anderson's-Black Rock* and *Sakraida* Is Misplaced. 34
IV. The Solicitor General's Proposed "Innovation" Standard Would Introduce Considerable Uncertainty and Inconsistency into Patent Determinations. 38

V. Although Not Before This Court, the Federal Circuit's Determination that Petitioner Was Not Entitled to Summary Judgment Was Entirely Correct. 44
CONCLUSION 50

TABLE OF AUTHORITIES

CASES

Adams v. *United States*, 383 U.S. 39 (1966) 10, 24, 25
Altoona Publix Theatres, Inc. v. *Am. Tri-Ergon Corp.*, 294 U.S. 477 (1935) 25
Alza Corp. v. *Mylan Labs., Inc.*, 2006 U.S. App. LEXIS 22616 (CAFC Sept. 6, 2006) 18, 35
Anderson's-Black Rock v. *Pavement Salvage Co.*, 396 U.S. 57 (1969) 12, 36, 37, 38
B.G. Corp. v. *Walter Kidde & Co.*, 79 F.2d 20 (CA2 1935) 24
Bayer AG v. *Apotex, Inc.*, 60 C.P.R. (3d) 58 (Ont. G.D. 1995), *aff'd*, 82 C.P.R. (3d) 256 (Ont. C.A. 1998) 44
Bd. of Trs. v. *Fox*, 492 U.S. 469 (1989) 48
Brown & Williamson Tobacco Corp. v. *Phillip Morris*, 229 F.3d 1120 (CAFC 2000) 20
Calmar, Inc. v. *Cook Chem. Co.*, 336 F.2d 110 (CA8 1964) ... 37
Celotex Corp. v. *Catrett*, 477 U.S. 317 (1986) 7
Cross Med. Prods., Inc. v. *Medtronic Sofanor Danek, Inc.*, 424 F.3d 1293 (CAFC 2005) 19
Dann v. *Johnston*, 425 U.S. 219 (1976) 37, 40
Day v. *Fair Haven & Westville Ry. Co.*, 132 U.S. 98 (1889) ... 26
Deepsouth Packing v. *Laitran Corp.*, 406 U.S. 518 (1972) 37
In re Dembiczak, 175 F.3d 994 (CAFC 1999) 28
Diamond Rubber Co. v. *Consolidated Rubber Tire Co.*, 220 U.S. 428 (1911) 28
Dow Chem. Co. v. *Halliburton Oil Well Cementing Co.*, 324 U.S. 320 (1945) 25
Duro-Last, Inc. v. *Custom Seal, Inc.*, 321 F.3d 1098 (CAFC 2003) 20
Dystar Textilfarben GmbH & Co. Deutschland KG v. *C.H. Patrick Co.*, 2006 WL 2806466 (CAFC 2006) 17, 18, 19, 38
Elec. Cable Joint Co. v. *Brooklyn Edison Co.*, 292 U.S. 69 (1934) 25
Expanded Metal Co. v. *Bradford*, 214 U.S. 366 (1909) 25, 26

Festo Corp. v. *Shoketsu Kinzoku Kogyo Kabushiki Co., Ltd.*, 535 U.S. 722 (2002) 15, 27, 39
In re Gartside, 203 F.3d 1305 (CAFC 2000) 43
Gilmore v. *Utah*, 429 U.S. 1012 (1976) 47
Graham v. *John Deere Co.*, 383 U.S. 1 (1966) ..... passim
Hadco Prods., Inc. v. *Walter Kidde & Co.*, 462 F.2d 1265 (CA3 1972) 41
Harries v. *Air King Prods. Co.*, 183 F.2d 158 (CA2 1950) 41
Hoechst v. *Halocarban (Ont.), Ltd.*, 2 S.C.R. 929 (1979) 44
Hotchkiss v. *Greenwood*, 52 U.S. 248 (1851) 32
In re Huang, 100 F.3d 135 (CAFC 1996) 43
In re Inland Steel Co., 265 F.3d 1354 (CAFC 2001) 43
In re Johnston, 435 F.3d 1381 (CAFC 2006) 43
In re Kahn, 441 F.3d 977 (CAFC 2006) 14
Kamen v. *Kemper Fin. Servs.*, 500 U.S. 90 (1991) 47
Knoll Pharm. Co. v. *Teva Pharms. USA, Inc.*, 368 F.3d 1381 (CAFC 2004) 7
In re Lee, 277 F.3d 1338 (CAFC 2002) 19
In re Leonor, 395 F.2d 801 (CCPA 1968) 14
Loom Co. v. *Higgins*, 105 U.S. 580 (1881) 27, 28
Lyon v. *Bausch & Lomb Optical Co.*, 224 F.2d 530 (CA2 1955) 41
Mandel Bros. v. *Wallace*, 335 U.S. 291 (1948) 25
Mast, Foos, & Co. v. *Stover Mfg. Co.*, 177 U.S. 485 (1900) 26
McGinley v. *Franklin Sports, Inc.*, 262 F.3d 1339 (CAFC 2001) 23
Motorola Inc. v. *Interdigital Tech. Corp.*, 121 F.3d 1461 (CAFC 1997) 20
Nat'l Steel Car, Ltd. v. *Canadian Pac. Ry.*, 357 F.3d 1319 (CAFC 2004) 20
Ormco Corp. v. *Align Tech., Inc.*, 2006 U.S. App. LEXIS 22306 (CAFC Aug. 30, 2006) 45
In re Passal, 426 F.2d 828 (CCPA 1970) 14
Potts v. *Creager*, 155 U.S. 597 (1895) 28
Princeton Biochemicals, Inc. v. *Beckman Coulter, Inc.*, 411 F.3d 1332 (CAFC 2005) 20

Radio Corp. of Am. v. *Radio Eng'g Labs.*, 293 U.S. 1 (1934) 46
Rengo Co. Ltd. v. *Molins Mach. Co., Inc.*, 657 F.2d 535 (CA3 1981) 41
Republic Indus., Inc. v. *Schlage Lock Co.*, 592 F.2d 963 (CA7 1979) 41
In re Rouffet, 149 F.3d 1350 (CAFC 1998) 24, 28
Ruiz & Foundation Anchoring Sys., Inc. v. *A.B. Chance Co.*, 357 F.3d 1270 (CAFC 2004) 20, 34
S. Fla. Water Mgmt. Dist. v. *Miccosukee Tribe of Indians*, 541 U.S. 95 (2004) 48
Sakraida v. *Ag Pro*, 425 U.S. 273 (1976) 12, 36
Sibia Neurosciences Inc. v. *Cadus Pharm. Corp.*, 225 F.3d 1349 (CAFC 2000) 20
Sinclair & Carroll Co., Inc. v. *Interchemical Corp.*, 325 U.S. 327 (1945) 25
In re Sponnoble, 405 F.2d 578 (CCPA 1969) 14
Stratoflex, Inc. v. *Aeroquip Corp.*, 713 F.2d 1530 (CAFC 1983) 48
Tokyo IP High Court, Case No. 2005(gyo-ke)10490 (June 29, 2006), *English summary at* www.asamura.jp/judgment/e_judgment/e_hei17(gyo-ke)10490.html 44
Uniroyal v. *Rudkin-Wiley Corp.*, 837 F.2d 1044 (CAFC 1988) 47
Universal Oil Prods. Co. v. *Globe Oil & Refining Co.*, 322 U.S. 471 (1944) 28
Warner-Jenkinson Co. v. *Hilton Davis Chem. Co.*, 520 U.S. 17 (1997) 15
Yamanouchi Pharm. Co., Ltd. v. *Danbury Pharmacal, Inc.*, 231 F.3d 1339 (CAFC 2000) 34

STATUTES

35 U.S.C. § 103(a) ..... passim
35 U.S.C. § 282 43

OTHER AUTHORITIES

H. Rep. No. 1923 (1952) 40
S. Rep. No. 1979 (1952) 40
Giles, S. Rich, *Escaping the Tyranny of Words: Is Evolution in Legal Thinking Impossible?*, 14 FED. CIR. B.J. 193 (2004/2005) 36, 37
Giles S. Rich, *Laying the Ghost of the "Invention" Requirement*, 14 FED. CIR. B.J. 163 (2004/2005) ..... passim
Christopher A. Cotropia, *Nonobviousness and the Federal Circuit: An Empirical Analysis of Recent Case Law*, (Sept. 2006) NOTRE DAME L. REV. (forthcoming), available at SSRN: http://ssrn.com/abstract=933192 ..... passim
Mark A. Lemley, *Reconceiving Patents in the Age of Venture Capital*, 4 J. SMALL & EMERGING BUS. L. 137 (2000) 29, 30
Christopher A. Cotropia, *Patent Law Viewed Through an Evidentiary Lens: The "Suggestion Test" as a Rule of Evidence* (Mar. 2006), Tulane Public Law Research Paper No. 06-03, available at SSRN: http://ssrn.com/abstract=893965 22
F. Scott Kieff, *Property Rights and Property Rules for Commercializing Inventions*, 85 MINN. L. REV. 697 (2000) 29
Harold C. Wegner, *Seven IP Cases on the Radar Screen*, http://patentlaw.typepad.com/patent/WegnerSCOTUS05.pdf (Sept. 7, 2005) 15
Lee Petherbridge & R. Polk Wagner, *The Federal Circuit and Patentability: An Empirical Assessment of the Law of Obviousness*, Univ. of Penn. L. School, Public Law Working Paper # 06-21 (Aug. 9, 2006), available at SSRN: http://ssrn.com/abstract=923309 ..... passim
John R. Thomas, *The Question Concerning Patent Law and Pioneer Inventions*, 10 HIGH TECH. L.J. 199 (1995) 30
Herbert H. Mintz & C. Larry O'Rourke, *The Patentability Standard in Historical Perspective: "Invention" to Section 103 Obviousness* (1977), in ULTIMATE CONDITION 2:216 (1977) 32
Eugene R. Quinn, Jr., *The Proliferation of Electronic Commerce Patents: Don't Blame the PTO*, 28 RUTGERS COMPUTER & TECH. L.J. 121 (2002) 30

Philippe Signore, *There is Something Fishy About a Presumption of Obviousness*, 84 J. PAT. & TRADEMARK OFF. SOC'Y 148 (2002)..... 43, 44
H.T. Markey, *Why Not the Statute?*, 65 J. PAT. OFF. SOC'Y 331 (1983)..... 24

BRIEF FOR THE RESPONDENTS

Respondents Teleflex Inc., et al. respectfully request that this Court affirm the judgment of the United States Court of Appeals for the Federal Circuit.

STATEMENT OF THE CASE

Respondent,[1] a worldwide leader in the development and production of automobile pedals, holds a U.S. patent on a unique adjustable automobile pedal. Respondent sued petitioner for patent infringement. On petitioner's motion for summary judgment, the district court held the patent invalid as obvious under 35 U.S.C. 103. The Federal Circuit reversed, holding that the district court had doubly erred, first by applying an incorrect legal standard for obviousness of the patent claims, and second by resolving issues of disputed fact in petitioner's favor.

1. This case involves a patent issued by the Patent and Trademark Office (PTO) to respondent on a particular "adjustable pedal assembly with electronic control," which is referred to as the Engelgau invention. Supp. J.A. 211 (Patent No. 6,237,565) (capitalization omitted). We first describe the field of the Engelgau invention, and then trace the examination process by which the PTO granted the patent.

a. Since the invention of the automobile, pedals have traditionally been "fixed" in place, supported by a brace either above or below. More recently, automobile manufacturers developed "adjustable" pedal systems (APSs), principally for use in larger vehicles for the benefit of shorter drivers. Using a switch or other control, the driver can move the pedal fore and aft in the vehicle's footwell. In vehicles without an APS, a shorter driver is forced to sit perched forward on the seat to reach a traditional fixed pedal. A driver so positioned is not only less comfortable but also risks being seriously injured by an airbag deploying from the steering wheel in an accident.

---

[1] We use the singular respondent for ease of reference.

One example of an APS is the "Asano" device found in a prior U.S. patent on which petitioner relies. An illustration of one embodiment of this is reproduced in the Appendix at 1a.[2] In Asano, when the driver steps on the pedal, the pedal assembly rotates around a fixed pivot (54, highlighted in red), creating Asano's "first pivot axis." This pivoting action triggers various mechanical linkages that eventually cause a lever (58, highlighted in blue) to rotate around a "second pivot axis" (60). That lever in turn is attached to a cable (61) that extends into the engine compartment and actuates the throttle.

Asano is large and mechanically complicated. Its elaborate design follows its inventor's efforts to overcome the "constant ratio" problem common to adjustable pedals – viz., adjustment at the pedal changes how much pressure must be applied to achieve the same amount of acceleration. Pet. App. 13a n.3. Asano's inventor thus included a variety of linkages to maintain a constant pedal "feel" despite changes in pedal position.

Asano uses a "mechanical" throttle control, using a cable to actuate the throttle. More recent designs tend to replace mechanical devices with "electronic" throttle controls (ETCs), which are better adapted to the electronic design of modern engines.

An ETC can be designed to detect the movement of the pedal and control speed in a variety of ways. One option is attaching the ETC to a fixed pedal at a pivot that rotates as the accelerator is depressed. The ETC measures pivotal rotation and sends an appropriate signal to the engine through wires. An example of such an ETC on a fixed pedal that detects pivotal rotation – again, one relied on by petitioner – is known as the "CTS 503."

Replacing a traditional mechanical throttle control with an ETC is not a matter of a simple switch, but instead gives rise to a

---

[2] We reproduce illustrations as fold-out pages so that the reader can review the brief while referring to the relevant image. Consistent with patent practice, particular elements in the illustration are referenced by parenthetical numbers; e.g., (54) refers to element 54 in the illustration.

variety of significant design challenges. For example, if an ETC is employed, the device must ensure that the "feel" of the pedal remains the same no matter where it is moved, despite the absence of the physical resistance produced by the linkage of a mechanical throttle control. In addition, the signal the ETC sends must correspond precisely to the pedal position, including returning to idle when the pedal is released. Because the device controls the vehicle's speed, the tolerance for error is very small.

Prior to the invention that is the subject of this litigation, other patents using the combination of an APS with an ETC had been granted, but in *all* of these prior designs, the pedal and ETC traveled fore and aft in the footwell together. There was no patent on an APS paired with an ETC that stayed fixed in position to the pedal's support regardless of any adjustment of the pedal assembly.[3]

b. Respondent Teleflex, Inc. is an industry leader in the design and manufacture of pedal systems. In 1997, respondent introduced the first APS in the United States to achieve wide commercial success. At that time, respondent had a large pedal group, with fifty employees devoted to design and manufacturing; by 2000, the engineering staff alone had grown to more than thirty-five employees. Between 1997 and 2000, respondent sold 1.5 million units of pedal systems annually. Based on enormous demand, respondent created a new manufacturing facility in Indiana employing approximately 350 individuals.

In 1998 Ford Motor Co. decided to include an APS with an ETC as a standard feature in the diesel version, and as an optional feature in the gas version, of its 2000 F350 super-duty pickup truck. (Previous models of the F350 had utilized an APS

---

[3] An example of such an APS is the "Rixon '593" patent (No. 5,819,593) an illustration of which is reproduced in the Appendix at 2a. In Rixon '593, when depressed by the driver, the pedal causes a pivot (50, highlighted in red) to rotate. An ETC (60, highlighted in blue) is attached to that pivot and measures the rotation. The pivot (50) and ETC (60) thus all travel fore and aft with the pedal (16).

with a manual throttle control.) Ford gave respondent the contract to provide the pedal system.

Logically, respondent sought to use existing APSs with ETCs that were already in use in the industry. But Ford's request presented respondent with a considerable and unique engineering challenge. The design of the F350, which was already set by Ford, provided unusually restricted footwell space, rendering the existing designs unworkable insofar as they caused the pedal to strike the heating duct on the F350.

Respondent's engineers expended considerable efforts in an attempt to overcome this design challenge over a period of many months. They experimented with numerous configurations. Some of the possible designs included making the ETC smaller; moving the ETC so that it continued to travel with the pedal, but on a different location on the pedal; removing the ETC from the pedal apparatus and placing it somewhere else; and bracing the pedal from below and moving it on a plate. Each introduced new faults and additional expense and was thus unsatisfactory.

After several months of design efforts, respondent settled on another approach altogether, using a pedal with a fixed pivot and fixing the ETC in a position that allowed it to respond properly to that pivot. While this particular compact design best met Ford's requirements because it did not strike the heating duct, it also created its own set of substantial engineering and economic problems that initially made it unlikely to in fact succeed.

As an engineering matter, the decision to fix the pivot and the ETC had a domino effect, requiring a series of additional design changes. A fixed pivot design requires a larger adjustment mechanism for the pedal governed by substantially larger springs. The pivot itself must be more than five times larger to support the pedal's mass and to properly convey movement to the sensor. These changes made the pedal substantially heavier, requiring a larger mounting bracket. The larger size of the bracket and the pivot pin, in turn, introduced "lash" – an unintended movement in the pedal – into the design, which caused the ETC to fail repeatedly. All of these problems, in turn, required additional design changes.

c. After completing the design of the APS with the fixed ETC and pivot, respondent sought and secured a patent, which the parties refer to by the name of its inventor, Engelgau. Two illustrations of Engelgau are reproduced in the Appendix at 3a and 4a. The relevant features of Engelgau for present purposes are: (1) the support (18, in blue); (2) the pivot (24, in red); (3) the pedal arm (14); and (4) the electronic control (28, in green). The claims specify that the "electronic control (28) [is] attached to [the] support (18)." In this design, the pedal is "responsive to [the] pivot (24)" and defines the axis about which the "pedal arm pivots." "[T]he position of [that] pivot remains constant while [the] pedal arm (14) moves." Supp. J.A. 218.

2. In 2002, respondent sued petitioner, a competing manufacturer of pedal systems, for infringement of the Engelgau patent.[4] Petitioner moved for summary judgment on the ground that Engelgau was invalid as obvious.

Petitioner's motion relied on the Asano APS patent, which, as noted above, has a manual throttle control. Petitioner contended, however, that a simple combination of Asano and the CTS 503 ETC would produce its invention. According to its Summary Judgment Motion, "the legal question raised by this motion is whether, to a person of ordinary skill in the pedal design art as of January 26, 1998, it would have been obvious to combine (a) the adjustable pedal assembly of Asano, with (b) an off-the-shelf electronic pedal position sensor, such as the CTS 503 Series pedal position sensor." Pet'r Mo. for Summ. J. 28.

According to petitioner, at the time of the Engelgau invention, advantages to combining an APS with an ETC were widely known. Moreover, petitioner maintained, an inventor logically would have combined Asano with an ETC by attaching a CTS 503 to Asano's pivot 54 – *i.e.*, to Asano's first pivot axis. Specifically, the CTS 503 would have engaged Asano's "pedal pivot

---

[4] Because the only question before this Court is obviousness, not infringement, we do not describe petitioner's infringing pedal design.

shaft (54), without materially altering the Asano pedal." Pet'r Reply in Support of Summ. J. 9.[5]

Respondent did not dispute that a person of ordinary skill in the art would have been motivated to combine an adjustable pedal with an ETC in the abstract. Indeed, as noted, the prior art already contained such combinations. Further, respondent had cited just such an invention (Rixon '593) to the patent examiner when it pursued the Engelgau patent.

Respondent instead explained that the critical feature of Engelgau that made it non-obvious was the *manner* in which it combined those elements as recited in claim 4 of the patent in suit. The patent provides that the ETC and the pivot to which it responds are fixed to the pedal's support structure. Petitioner, by contrast, could provide no "suggestion that [CTS 503] be incorporated in the manner specified in [Engelgau]" – *i.e.*, on pivot 54 of Asano. Resp. Response to Pet'r Mot. Summ. J. 18.

Further, respondent explained, "someone in Engelgau's shoes, who was trying to create an adjustable pedal assembly with an attached electronic control that was easy to package in a narrow space and was also relatively simple and inexpensive, would shun Asano." The Asano device "was expensive, time consuming to assemble, and required a significant amount of packaging space" because Asano was designed to overcome the "constant ratio problem." Resp. Response to Pet'r Mo. Summ. J. 19-20. Engelgau, by contrast, was developed to "provide[] a simplified vehicle control pedal assembly that is less expensive, and which uses fewer parts and is easier to package within the vehicle." Supp. J.A. 216.

Given the procedural posture of the case, petitioner's burden to invalidate claim 4 of the patent was substantial in two

---

[5] Petitioner embodied its theory of obviousness in a demonstrative illustration that it has provided to this Court on CD-ROM, which is also available at Supp. J.A. 81. The critical frame of the illustration is reproduced in the Appendix to this brief at 5a. In fact the device in the demonstrative cannot work because pivot 54 does not rotate with depression of the pedal and thus cannot be used to actuate the ETC.

respects. Because an issued patent claim was presumed valid, petitioner could overcome the presumption with "clear and convincing evidence" of obviousness. *Knoll Pharm. Co.* v. *Teva Pharms. USA, Inc.*, 367 F.3d 1381, 1384 (CAFC 2004). In addition, because the issue arose on summary judgment, the court was required to construe all disputed facts against petitioner as the moving party. *Celotex Corp.* v. *Catrett*, 477 U.S. 317, 322-24 (1986); *Knoll Pharm. Co.*, 367 F.3d at 1384.

Petitioner supported its motion for summary judgment with a declaration from one of its own employees. Respondent submitted two affidavits from independent experts with substantial industry experience.

Despite this unequivocal evidence that the design feature of Engelgau would not have been obvious to one skilled in the art, the district court nonetheless granted petitioner summary judgment, holding Engelgau claim 4 invalid as obvious. The district court found that a person skilled in the art would have been motivated to combine Asano with the CTS 503 to avoid a known problem with wire chafing in fixed pedal designs and because Asano and the CTS 503 relate to the general field of pedal design. Pet. App. 43a-44a.

3. On appeal, the Federal Circuit reversed on two independent grounds and remanded the case for further proceedings on the question whether claim 4 was obvious under the proper legal standard.

The Federal Circuit explained that its precedent evaluates whether there was evidence in the record of "some 'suggestion, teaching, or motivation' that would have led a person of ordinary skill in the art to combine the relevant prior art teachings in the manner claimed." Pet. App. 8a. The Federal Circuit took care to emphasize the flexibility of its suggestion standard, particularly with respect to the kinds of evidence that could be invoked in support of finding a motivation to combine. The court noted that such a suggestion

> may be found explicitly or implicitly: 1) in the prior art references themselves; 2) in the knowledge of those of ordinary skill in the art that certain references, or disclosures in those references, are of special interest or importance in the field; or 3) from the nature of the problem to be solved, leading inventors to look to references relating to possible solutions to that problem.

Ibid. (citations omitted).

The Federal Circuit explained that the essential element of respondent's patent as recited in claim 4 is that it "provides for an assembly wherein the electronic control is mounted to the support bracket of the assembly." Pet. App. 2a. It is this "configuration [that] avoids movement of the electronic control during adjustment of the pedal's position on the assembly." *Id.* 2a-3a. The Federal Circuit concluded that the district court had erred in failing to make any "findings as to whether there was a suggestion or motivation to combine the teachings of Asano with an electronic control in the particular manner claimed by [Engelgau]" – *i.e.*, "findings as to a suggestion or motivation to attach an electronic control to the support bracket *of the Asano assembly*." *Id.* 12a (emphasis added).

The Federal Circuit thus focused on the district court's complete failure to make any findings justifying its conclusion that a pedal designer would have selected the Asano pedal from the prior art and combined a CTS 503 with it. The court recognized that there may be an implied suggestion when the prior art is directed at the same problem as the challenged invention. Asano, however, was not designed to provide "a smaller, less complex, and less expensive electronic pedal assembly"; rather, it has a large and complicated design that is "directed at solving the 'constant ratio problem.'" Pet. App. 12a-13a. Nor did the district court justify the conclusion that a suggestion to combine existed in the desire to avoid wire chafing. Again, there is no reason that an inventor would select the Asano design to avoid wire chafing. In addition, the district court failed to explain why the desire to avoid wire chafing would provide "motivation to attach the electronic control on the support bracket of the pedal

assembly." Id. at 13a. In any event, the prior art cited by the district court that addressed wire chafing "does not relate to adjustable pedal assemblies; therefore, it does not address the problem of wire chafing in an adjustable pedal assembly." *Ibid.*

The Federal Circuit separately concluded that the case must be remanded because the district court had resolved disputed questions of fact in favor of petitioner – the moving party. The Federal Circuit concluded, "by crediting [petitioner]'s expert declarant and discrediting the two declarants offered by [respondent], the district court erred as a matter of law" because it resolved a disputed material fact – what would have been obvious at the time to one of ordinary skill in the art – on a motion for summary judgment. *Ibid.*

4. This Court subsequently granted certiorari.

SUMMARY OF THE ARGUMENT

I. The arguments of petitioner and its *amici* rest on a false caricature of the Federal Circuit's settled suggestion, teaching, and motivation inquiry. The court of appeals has repeatedly held that the suggestion analysis is flexible and looks to any available indication that a practitioner in the art would have had some reason to select the elements of the invention from among the prior art and combine them in the manner claimed by the invention. The essence of the suggestion inquiry in this respect is that it looks to "implicit" sources of motivation. Petitioner's assertions that the standard looks only to the prior art; ignores the problem to be solved; and precludes resort to common sense are all demonstrably incorrect under settled precedent. The further contention that the "implicit suggestion" standard is difficult to satisfy is belied by a long line of Federal Circuit precedents deeming patents obvious under that approach.

II. The suggestion inquiry is compelled by this Court's precedents, the statutory text, and sound patent policy. This Court in *Graham* v. *John Deere Co.*, 383 U.S. 1 (1966), held that obviousness of a patent should be determined in light of the factors that Congress specified in 35 U.S.C. 103(a), as well as various other factual considerations that may be relevant. But

Graham did not specify a test for obviousness. Rather, it expressly anticipated case-by-case development of the doctrine.

A. The Federal Circuit's settled suggestion inquiry properly focuses on the "inventive choice" – *i.e.*, on whether there is any indication that the practitioner, in fact, would have had any reason to select the elements of the invention from the prior art and combine them in the manner specified by the invention. The evidence of the suggestion need not be extensive and its source may be found literally anywhere, particularly in the factors that this Court identified in *Graham*.

The current established approach tracks the statutory standard. Section 103(a) asks whether the invention would have been obvious "as a whole." When a claimed invention is a unique arrangement of previously known components in a new and previously unforeseen way – as is the case here – the individual components of the invention are necessarily obvious as a matter of law since a person of ordinary skill is assumed to know *all* of the prior art in the relevant field. In such a case, the question of obviousness of the invention "as a whole" therefore necessarily turns on whether the practitioner would have selected the particular art employed in the invention, and whether she would have combined it in the manner claimed by the invention. This Court's decision in *Adams* v. *United States*, 383 U.S. 39, 47 (1966), held non-obvious a wet battery composed entirely of prior art because there was no previous "suggest[ion]" to make the combination in the manner claimed by the patent. Precedent prior to the adoption of Section 103(a) is to the same effect.

B. The suggestion inquiry best effectuates Congress's determination to balance the interests of inventors and the public. The most noteworthy fact in this case is that all of the professional organizations with a genuine interest in the application of a balanced standard for determining obviousness support respondent. The American Bar Association, American Intellectual Property Law Association, Federal Circuit Bar Association, D.C. Bar Association, New York Intellectual Property Law Associa-

tion, and Intellectual Property Law Association *all* have endorsed the Federal Circuit's suggestion standard.

On the one hand, the suggestion standard guards against improperly deeming inventions obvious by 20/20 hindsight. Section 103(a) directs that obviousness be measured from the perspective of the time of the invention. This Court has admonished in *Graham* and earlier cases dating back more than a century against the use of perfect hindsight to erroneously invalidate patents as obvious. Because inventions are so often evolutionary rather than revolutionary, an obviousness standard that merely compares an invention to the prior art will often produce the mistaken conclusion that the former was obvious. The suggestion standard minimizes hindsight by focusing the decisionmaker on identifying some reason to believe that a practitioner actually would have selected the elements of the invention from the prior art and combined them in the manner claimed.

On the other hand, the suggestion inquiry's flexibility guards against overpatenting. Petitioner's contrary arguments rest on its mischaracterization of Federal Circuit precedent. In addition, empirical studies confirm that the suggestion analysis does not contribute to overpatenting.

III. Petitioner's arguments for overturning the settled obviousness inquiry are not persuasive.

A. Petitioner's proposed "capability" standard cannot be reconciled with the statutory text of 103(a) or underlying policies. Petitioner looks only to whether a practitioner had the *ability* to combine the prior art. The statute, by contrast, asks whether he "would have" found it obvious to do so. To be sure, if the skill of the art is sufficiently high or is directed at a particular problem, that may provide a "suggestion" to combine the art. The Federal Circuit has made clear that the invention would be obvious in that circumstance. But if nothing suggested that the practitioner combine the art at the time, even if he had the technical capability to do so, then the invention "as a whole" – as opposed to the constituent pieces of prior art with which the practitioner is assumed to be familiar – is not obvious.

The Solicitor General's "innovation" standard is similarly contrary to the statute. Indeed, the government makes no effort in its brief to marry its position with the text that Congress actually adopted. The statutory test is "obviousness," not "innovativeness." Although, as the government notes, the former is the vehicle for determining the latter, obviousness remains the touchstone of the inquiry. Critically, Congress adopted the "obviousness" test specifically to reject the very "innovation" standard that the government now seeks to reintroduce.

The proposals of petitioner and the Solicitor General are also an open invitation to inappropriate hindsight analysis. Neither requires any indication that a practitioner would have selected the elements that comprise the invention, much less that she would have combined them in the manner claimed. Their standards instead call for a comparison of the invention with the prior art that has *already been identified* through the invention. That is the very definition of hindsight. Particularly given that many inventions represent vital but relatively small advances over the prior art, these proposals to supplant the suggestion inquiry are very likely to produce erroneous hindsight determinations that patents are invalid as obvious.

B. Petitioner contends that subsequent to *Graham* the Court adopted a very restrictive "synergy" standard – which petitioner equates with a test of "capability" – in *Anderson's-Black Rock* v. *Pavement Salvage Co.*, 396 U.S. 57, 61 (1969), and *Sakraida* v. *Ag Pro*, 425 U.S. 273 (1976). That assertion is wrong for the reasons given by the Solicitor General. Although both of those decisions instead expressly embrace the *Graham* factors and explain that a patent may be non-obvious if the prior art has a "synergistic result," they did not adopt "synergy" as a test.

IV. The Solicitor General's proposed "innovation" standard would introduce considerable uncertainty and disuniformity into federal patent law. The government's proposal closely mirrors the standard that this Court employed prior to Congress's adoption of Section 103(a) in the 1952 Patent Act. Congress intended the statute to maintain the same general level of patentability as pre-Act precedent. But it consciously selected the

term "obvious" to reject the prior inquiry into "innovativeness" and "invention," terms which call for wholly subjective judgments. Congress recognized that the indeterminate nature of that standard had produced wildly inconsistent results between patent examiners and among the courts and examiners. Indeed, one can readily recognize that the Solicitor General, appearing in this Court as an advocate for the PTO, hopes to reintroduce that standard precisely to give patent examiners greater flexibility and to render examiners' rulings less susceptible to review in the Federal Circuit. But Congress made a very different choice, and the standard the Solicitor General proposes does not give effect to the statutory inquiry into "obviousness."

V. The question whether the Federal Circuit properly applied its suggestion inquiry to the facts of this case is not presented here, because petitioner has waived that issue. Though the Solicitor General briefly attempts to resuscitate the issue with a new theory of obviousness, the government offers no reason for this Court to depart from its ordinary practice and to decide a fact-bound question raised for the first time in this case in this Court by an *amicus*, particularly when the case is in an interlocutory posture.

In any event, the court of appeals' decision was entirely correct. The essence of the ruling below is that the district court offered no reason, much less the required clear and convincing evidence, that a practitioner would have combined a CTS 503 with the first pivot axis of the Asano device. Asano is a large and cumbersome pedal system, and there was no reason a pedal designer would turn to it.

The Solicitor General's new theory of obviousness fares no better. According to the government, Engelgau is obvious because a pedal designer would have placed an electronic throttle control on the *second* pivot pin of Asano. That is a different argument, with different engineering features, than the one presented below by petitioner and considered by the court of appeals. But the Solicitor General's theory in any event does not render Engelgau obvious for two reasons. First, it does not address the court of appeals' central point that a practitioner would

not use the complicated Asano pedal system. Second, and equally important, it does *not* render Engelgau obvious. The Engelgau invention describes a pedal system in which the ETC responds to a pivot that supports the pedal and about which the pedal rotates. That is not what the government describes, as on its theory the ETC would respond to an entirely different pivot.

ARGUMENT

Since this Court's decision in *Graham* v. *John Deere Co.*, 383 U.S. 1 (1966), a single, uniform standard has guided both examiners and courts in evaluating the "obviousness" of inventions. The "teaching, suggestion, motivation" inquiry first adopted by the Court of Customs and Patent Appeals at least as early as 1938 and later employed by the Federal Circuit looks to "whether a person of ordinary skill in the art, possessed with the understandings and knowledge reflected in the prior art, and motivated by the general problem facing the inventor, would have been led to make the combination recited in the claims." *In re Kahn*, 441 F.3d 977, 988 (CAFC 2006). See also, *e.g.*, *In re Passal*, 426 F.2d 828, 831 (CCPA 1970); *In re Sponnoble*, 405 F.2d 578, 585 (CCPA 1969); *In re Leonor*, 395 F.2d 801, 802 (CCPA 1968).

Petitioner and the Solicitor General have advanced competing proposals for rejecting outright or at least substantially modifying the Federal Circuit's standard. In evaluating those proposals, the Court should be attentive to the fact that, in this context, change in settled doctrine is *exceptionally* disruptive. There is no question that this Court will, as it should, take corrective action if it concludes that the current suggestion test is untenable in light of the statutory text or its precedents. But unlike in many other areas of the law, an opinion unnecessarily casting doubt on this particular settled doctrine would extract a very substantial cost from the judiciary and from industry. Indeed, this Court notably rebuked the Federal Circuit for ignoring the admonition that "courts must be cautious before adopting changes that disrupt the settled expectations of the inventing community. * * * The responsibility for changing [established doctrine] lies with

Congress. Fundamental alterations in these rules risk destroying the legitimate expectations of inventors in their property." *Festo Corp.* v. *Shoketsu Kinzoku Kogyo Kabushiki Co., Ltd.*, 535 U.S. 722, 739 (2002) (citing *Warner-Jenkinson Co.* v. *Hilton Davis Chem. Co.*, 520 U.S. 17, 28 (1997)).

This case accordingly calls for special attention to the principle of stability underlying the doctrine of *stare decisis*. Literally millions of patents have been issued in reliance on the suggestion test, each of which would become susceptible to *post hoc* litigation in federal district courts around the nation if this Court were to call that standard into question. As petitioner puts it with only slight overstatement, "[t]he answer to this question affects every pending U.S. patent application, every issued U.S. patent, and every U.S. federal court challenge to the validity of a patent." Pet. for Cert. 1-2. The investments underlying those patents no doubt reach into the many tens of billions of dollars. A standard that materially differs from existing law will invite a blizzard of litigation, including challenges to existing licensing agreements. A new approach to obviousness will also cast aside the many dozens of Federal Circuit decisions and hundreds of district court rulings that have built up a body of governing precedent.

Obviously, accepting petitioner's position in particular would be, in the least, earth-shattering for the settled expectations of patentees, licensees, and investors. Petitioner's position would "sharply tighten up patent granting standards in the mechanical and electronic arts and threaten the validity of literally hundreds of thousands of existing patents still in force." Harold C. Wegner, Seven IP Cases on the Radar Screen, http://patentlaw.typepad.com/patent/WegnerSCOTUS05.pdf (Sept. 7, 2005). As explained by Judge Giles Rich, the principal author of Section 103, the avowed goal of petitioner's "synergy" test is to severely limit patents: "The laws of physics and chemistry in accordance with which all inventions perform do not permit of the judicially imagined magic according to which 2 + 2 = 5. Wherever such a spurious test prevails all patents are invalid. And there are those who think that is heaven." Giles S.

Rich, *Laying the Ghost of the "Invention" Requirement*, 14 FED. CIR. B.J. 163, 178 (2004/2005).

Even relatively subtle shifts in settled obviousness jurisprudence would undoubtedly introduce very substantial uncertainty into the patent system. "Changes in the area of nonobviousness, an already difficult[] doctrine to grasp and apply, will only muddy the doctrine, making nonobviousness determinations uncertain and unclear." Christopher A. Cotropia, *Nonobviousness and the Federal Circuit: An Empirical Analysis of Recent Case Law*, (Sept. 2006) Notre Dame L. Rev. (forthcoming), available at SSRN: http://ssrn.com/abstract=933192, at 11. Such uncertainty

> is damaging to the patent system and discouraging to inventors, to whom we owe much, and that is bad for the country. It is even more discouraging to those who risk the investment to perfect and commercialize the inventions the inventors made and thus give the benefit of them to the public. Lawyers may thrive on confusion but businessmen like to know where they are at. Confusion in the law costs them money. That cost they pass on to the public.

Rich, *Laying the Ghost of the "Invention" Requirement*, 14 Fed. Cir. B.J. at 164.

Put another way, if Congress concludes after thorough legislative study that a decision of this Court approving the settled suggestion test should be supplanted with a rule that deems more patents obvious, it can easily do so. But if this Court unnecessarily disrupts the doctrine itself, it will be largely impossible to close Pandora's box. The economic consequences of an adverse ruling in this case would be immediate and substantial.

* * * *

The above discussion frames the appropriate disposition of this case, which should seek to preserve stability in the law while simultaneously reinforcing the importance of the flexibility in obviousness determinations urged by the government. First, the Court should flatly reject petitioner's rigid "synergy"

standard for the reason given by the Solicitor General: the statutory text and this Court's precedents dictate a flexible, case-specific inquiry into determining obviousness. Second, the Court should reject the government's proposed "exceptional innovation" standard on the ground that Congress adopted the "obviousness" standard precisely to supplant the prior inquiry into inventiveness, which proved too vague. Third, the Court should approve the Federal Circuit's suggestion test, which gives effect to the text of Section 103 and this Court's precedents, and which has proven administrable for patent examiners, the courts, and practitioners. But in doing so, the Court should account for the arguments of the Solicitor General by making clear that the factors cited by the government as relevant to an appropriately flexible inquiry into obviousness – *e.g.*, the nature of the problem to be solved, common sense, and the skill of a practitioner in the art – are all expressly accounted for by Federal Circuit precedent. By embracing the settled suggestion test in this fashion, the Court can ensure the proper direction of the law of obviousness without disrupting long-settled expectations.

I. The Arguments of Petitioner and Its *Amici* Rest on an Inaccurate Caricature of the Federal Circuit's Suggestion Inquiry.

Before turning to the legal basis for the settled suggestion standard, it is essential to set the record straight on what Federal Circuit precedent does, and does not, require. The briefs of petitioner and its *amici* are filled with criticisms of current obviousness jurisprudence that in fact rest on a series of inaccurate characterizations of the Federal Circuit's decisions. As the court of appeals explained in a recent decision by its Chief Judge, criticisms such as those raised by petitioner and its *amici* "misread[] this court's cases and misdescribe[] our suggestion test." *Dystar Textilfarben GmbH & Co. Deutschland KG* v. *C.H. Patrick Co.*, 2006 WL 2806466, at *8 (CAFC 2006). Petitioner's claims about the Federal Circuit's doctrine rest at most on "arguably imprecise language" from isolated decisions "quoted out of context." *Id.* at *9. There is a substantial "danger inherent in focusing on isolated dicta rather than gleaning the law of a particular

area from careful reading of the full text of a group of related precedents for all they say that is dispositive and for what they do." *Id.* at *11. Because parties such as petitioners and their *amici* "do not engage in such careful, *candid*, and complete legal analysis, much confusion about the law arises and, through time, can be compounded." *Id.* at 11. (emphasis added).

At the most general level, the Solicitor General asserts that the Federal Circuit applies a rigid standard – one that permits a showing of obviousness based on a very limited body of sources with the consequence that the court approves inventions that should be deemed obvious. That is not correct. "In contrast to the characterization of some commentators, the suggestion is not a rigid categorical rule." *Id.* at *4. "On the whole, the jurisprudence of obviousness, as developed by the Federal Circuit, appears relatively stable and increasingly flexible." Lee Petherbridge & R. Polk Wagner, *The Federal Circuit and Patentability: An Empirical Assessment of the Law of Obviousness*, Univ. of Penn. L. School Public Law Working Paper # 06-21 (Aug. 9, 2006), available at SSRN: http://ssrn.com/abstract=923309, at 6.

The Solicitor General principally fails to acknowledge the force of a central feature of the suggestion test – that it freely permits a finding that a suggestion to combine prior art references is "implicit" in, for example, the prior art itself or the ordinary skill of a practitioner of the art. "There is flexibility in our obviousness jurisprudence because a motivation may be found implicitly in the prior art. We do not have a rigid test that requires an actual teaching to combine before concluding that one of ordinary skill in the art would know how to combine references." *Alza Corp.* v. *Mylan Labs, Inc.*, 2006 U.S. App. LEXIS 22616, at *9-10 (CAFC 2006).

The Solicitor General asserts to the contrary that Federal Circuit precedent "focuses attention exclusively on a search for teachings, suggestions, and motivations in *the prior art*." S.G. Br. 25 (emphasis added). That is not accurate. "[U]nder our non-rigid 'motivation-suggestion-teaching' test, a suggestion to combine need not be found in the prior art." *Alza*, 2006 U.S. App. LEXIS 22616, at *20. "If the problem [motivating the in-

vention] is within the knowledge of one of ordinary skill in the art, then it is *irrelevant* that the prior art does not disclose the problem." *Cross Med. Prods., Inc.* v. *Medtronic Sofanor Danek, Inc.*, 424 F.3d 1293, 1323 (CAFC 2005) (emphasis added).

Importantly, Federal Circuit precedent recognizes that the suggestion to combine the prior art may properly be shown merely by the problem the inventor sought to solve or by the commonplace desire to produce an improved product. The court has thus

> repeatedly held that an implicit motivation to combine exists *not only* when a suggestion may be gleaned from the prior art as a whole, but when the "improvement" is technology-independent and the combination of references results in a product or process that is more desirable, for example because it is stronger, cheaper, faster, lighter, smaller, more durable, or more efficient. Because the desire to enhance commercial opportunities by improving a product or process is universal—and even common-sensical—we have held that there exists in these situations a motivation to combine prior art references even absent any hint of suggestion in the references themselves. In such situations, the proper question is whether the ordinary artisan possesses knowledge and skills rendering him *capable* of combining the prior art references.

Dystar, 2006 WL 2806466, at *11 (first emphasis added).

The Solicitor General next contends that Federal Circuit precedent precludes resort to "common sense." S.G. Br. 26. In fact, the "suggestion test is in actuality quite flexible and not only permits, but *requires*, consideration of common knowledge and common sense." *Dystar*, 2006 WL 2806466, at *11 (collecting cases). The case cited by the government actually rests on the PTO's "utter failure to explain the 'common knowledge and common sense' on which it relied." *Id.* at 10 (quoting *In re Lee*, 277 F.3d 1338, 1341, 1344 (CAFC 2002)). "In other words, we instructed the Board to explain *why* 'common sense' of an ordinary artisan seeking to solve the problem at hand

would have led him to combine the references." *Ibid.* (emphasis in original).

The government finally asserts that the "implicit suggestion" standard "has often proven difficult to satisfy." S.G. Br. 20. In fact, recent decisions finding an implicit suggestion to combine prior art are not in any respect outliers or a new development in Federal Circuit jurisprudence. See, *e.g.*, *Princeton Biochemicals, Inc.* v. *Beckman Coulter, Inc.*, 411 F.3d 1332, 1338-39 (CAFC 2005) (problem to be solved, securing capillaries during a medical procedure, supplied motivation to combine); *Nat'l Steel Car, Ltd.* v. *Canadian Pac. Ry.*, 357 F.3d 1319, 1337-39 & n.22 (CAFC 2004) (motivation to combine from knowledge of one of ordinary skill and from needs of customers); *Ruiz* v. *A.B. Chance*, 357 F.3d 1270, 1276 (CAFC 2004) (motivation to combine based on the nature of the problem to be solved, because the two references address precisely the same problem, underpinning existing structural foundations, stating that "this form of motivation to combine is particularly relevant with simpler, mechanical technologies"); *Duro-Last, Inc.* v. *Custom Seal, Inc.*, 321 F.3d 1098, 1109 (CAFC 2003) (motivation to combine because of knowledge of person of ordinary skill in art); *Brown & Williamson Tobacco Corp.* v. *Phillip Morris*, 229 F.3d 1120, 1126-28 (CAFC 2000) (publications regarding general value of engineering feature provided a motivation to combine references); *Sibia Neurosciences Inc.* v. *Cadus Pharm. Corp.*, 225 F.3d 1349 (CAFC 2000) (motivation to modify prior art from knowledge in the art); *Motorola Inc.* v. *Interdigital Tech. Corp.*, 121 F.3d 1461, 1472 (CAFC 1997) (no requirement that the prior art contain an express suggestion to combine known elements to achieve the claimed invention).

With the suggestion inquiry properly characterized, we now turn to why the Court of Customs and Patent Appeals and later the Federal Circuit correctly concluded that it is compelled by this Court's precedents, the statutory text, and sound patent policy.

II. This Court's Precedents, the Text of Section 103(a), and the Purposes Underlying the Statute All Support the Federal Circuit's Established Suggestion Inquiry.

Federal law establishes three preconditions to the award of a patent: novelty; utility/usefulness; and "non-obviousness." This case concerns the third requirement, set forth in 35 U.S.C. 103(a), which Congress enacted as part of the Patent Act of 1952. The statute provides:

> A patent may not be obtained though the invention is not identically disclosed or described as set forth in section 102 of this title, if the differences between the subject matter sought to be patented and the prior art are such that the subject matter as a whole would have been obvious at the time the invention was made to a person having ordinary skill in the art.

The Court's seminal decision interpreting Section 103 is *Graham* v. *John Deere Co.*, 383 U.S. 1 (1966), which in construing the statute stated simply that the obviousness determination should be made only after first identifying the relevant facts, which included those that Congress specified in the statute and potentially others:

> Under § 103, the scope of the prior art are to be determined; differences between the prior art and the claims at issue are to be ascertained; and the level of ordinary skill in the pertinent art resolved. * * * Such secondary considerations as commercial success, long felt but unsolved needs, failure of others, etc., * * * may have relevancy.

Id. at 17.

Graham was not this Court's final word on obviousness, particularly with respect to patents that are essentially novel combinations of known components. *Graham* itself did not address the standard for determining the obviousness of a patent that "combined" prior art; the invention there was merely a modification of a prior art plow shank. This Court moreover did not go beyond instructing courts to identify several relevant factors and avoided specifying a *test* for applying those factors to

determine obviousness. Instead, the Court stated that "[a]gainst this background [of the factors it had cited], the obviousness or nonobviousness of the subject matter is determined," and the Court expressly anticipated "case-by-case development" of the doctrine it was creating. *Id.* at 17-18. Thus, while petitioner is correct that the Court has never specified a "teaching, suggestion, motivation" inquiry, the more salient point is that the Court has never articulated the governing standard at all. This Court's decision in *Graham* thus "[left] a significant gap—how does a decision-maker go from the result of the three initial factual inquiries to the ultimate conclusion of nonobviousness or obviousness?" Christopher A. Cotropia, *Patent Law Viewed Through an Evidentiary Lens: The "Suggestion Test" as a Rule of Evidence* (Mar. 2006), Tulane Public Law Research Paper No. 06-03, available at SSRN: http://ssrn.com/abstract=893965, at 13. And this Court expressly "expected appellate court involvement in the development of the doctrine." Petherbridge & Wagner, *supra*, at 12.

"The Federal Circuit and its predecessor court, the Court of Customs and Patent Appeals, established a test to fill this gap": the so-called "teaching, suggestion, motivation" standard. Cotropia, *Evidentiary Lens*, at 13. For the reasons that follow, petitioner's argument that this settled suggestion inquiry should be overturned cannot be reconciled with this Court's precedents or the text of Section 103(a).

A. The Obviousness Inquiry Properly Focuses on the Selection of the Elements from the Prior Art and the Manner of Their Combination.

The Federal Circuit's "suggestion" inquiry focuses the obviousness standard on the inventive choice – *viz.*, the practitioner's choice of elements from among all of the prior art and the decision to combine the art in a particular manner.[6] The Federal

---

[6] "Inventive choice" is not a patent term of art. We use it for simplicity to capture the focus of the Federal Circuit's inquiry: whether the practitioner would have selected the prior art that comprises the invention and would have combined it in the manner claimed by the invention.

Circuit looks to the factors specified by this Court in *Graham*, as well as other relevant facts (just as *Graham* itself anticipated), to determine if any indicate that a practitioner would have selected the elements of the invention from among the prior art and combined them in the manner claimed:

> [T]he level of skill in the art may inform whether the artisan would find a suggestion to combine in the teachings of an exemplar of prior art. Where the level of skill is high, one may assume a keener appreciation of nuances taught by the prior art. Similarly, appreciation of the differences between the claims in suit and the scope of prior art references – a matter itself informed by the operative level of skill in the art – informs the question of whether to combine prior art references.

McGinley v. *Franklin Sports, Inc.*, 262 F.3d 1339, 1351-52 (CAFC 2001).

Thus, in this case, the elements of petitioner's claim that Engelgau is invalid – the Asano pedal and the CTS 503 – were obvious as a matter of law because they are part of the prior art. The Federal Circuit focused on the inventive choice – *i.e.*, whether a practitioner of the art of pedal design would have had some motivation to combine that prior art and to do so in the manner claimed (*i.e.*, place the CTS 503 throttle control on the first pivot axis (54) of the Asano device). The court of appeals concluded that such a finding could not be made on the summary judgment record, principally because the district court had offered no basis for accepting petitioner's assertion that a practitioner would have chosen the large and cumbersome Asano device.

That standard follows from the statutory text. Under Section 103(a), the question is whether "the subject matter as a whole would have been obvious." The "whole" of the subject matter of an invention includes the elements of which it is composed and the manner in which they are combined. The first of those – the component elements – are essentially obvious as a matter of law in the vast majority of inventions. Almost all inventions are composed of components or materials from the

prior art, since these are the building blocks of combination inventions. The Federal Circuit's first chief judge put it best: "virtually all inventions are 'combinations,' and * * * every invention is formed of 'old elements.' * * * Only God works from nothing. Man must work with old elements." H.T. Markey, *Why Not the Statute?*, 65 J. PAT. OFF. SOC'Y 331, 333-34 (1983). The "person having ordinary skill in the art" contemplated by Section 103(a), in turn, is presumed to know all of the prior art. *In re Rouffet*, 149 F.3d 1350, 1357 (CAFC 1998).

What remains of "the subject matter as a whole" that might be non-obvious, therefore, is the inventor's choice of elements from among the prior art and the manner in which she combined them. The obviousness inquiry properly focuses on this inventive choice. As Judge Learned Hand, renowned for his patent opinions, explained:

> All machines are made up of the same elements; rods, pawls, pitmans, journals, toggles, gears, cams, and the like, all acting their parts as they always do and always must. All compositions are made of the same substances, retaining their fixed chemical properties. But the elements are capable of an infinity of permutations and the selection of that group which proves serviceable to a given need may require a high degree of originality. It is that act of selection which is the invention.

B.G. Corp. v. *Walter Kidde & Co.*, 79 F.2d 20, 22 (CA2 1935).

This Court's decision in *Adams* v. *United States*, 383 U.S. 39 (1966) – a companion case to *Graham* – illustrates the statute's dual focus on the practitioner's choice from the prior art and coming up with the manner of the combination. The patent in *Adams* addressed a "wet battery," which included two terminals composed of particular metals with water providing the battery fluid. Compared to the prior art, the battery had advantages (*e.g.*, it "could be fabricated and stored indefinitely without any fluid in its cells") and disadvantages (*e.g.*, it "could not be shut off; the chemical reactions in the battery continued even though the current was not withdrawn"). *Id.*

This Court held the invention nonobvious "[d]espite the fact that each of the elements of the Adams battery was well known in the prior art." 383 U.S. at 51. This Court looked to the inventive choice underlying the *Adams* invention, and in particular whether there was any suggestion to combine the prior art in the manner claimed. "[T]he issue is whether bringing them together as taught by Adams was obvious in light of the prior art." *Id.* at 50. This Court held that the manner of combination was nonobvious because the relevant facts did not "*suggest*" the combination. *Id.* at 47 (emphasis added). To the contrary, perceived problems with Adams' combination "would, we believe, deter any investigation into such a combination." *Id.* at 52. In effect, this Court itself foreshadowed the suggestion analysis that has emerged over the past forty years in thousands of decisions by other federal courts.

Many of this Court's decisions prior to Congress's adoption of the 1952 Act are to the same effect. *Mandel Bros.* v. *Wallace*, 335 U.S. 291, 295 (1948) (invalidating claims where like-compositions "had been successfully employed in prior patents for their anticorrosive effect"); *Sinclair & Carroll Co., Inc.* v. *Interchemical Corp.*, 325 U.S. 327, 333 (1945) (invalidating claims describing printing ink that dried instantly upon application of heat, when, inter alia, "an article written in 1931 * * * had posed the problem"); *Dow Chem. Co.* v. *Halliburton Oil Well Cementing Co.*, 324 U.S. 320, 326 (1945) (invalidating claims describing method of using corrosion inhibitor to protect equipment used in oil wells, where, inter alia, a report taught use of inhibitor to protect other sorts of equipment); *Altoona Publix Theatres, Inc.* v. *Am. Tri-Ergon Corp.*, 294 U.S. 477, 486 (1935) (patent not available on "advance plainly indicated by the prior art"); *Elec. Cable Joint Co.* v. *Brooklyn Edison Co.*, 292 U.S. 69, 79 (1934) (concluding that device was patentable only when "it was the result of invention, not the mere exercise of skill in the calling and not one plainly indicated by the prior art"); *Expanded Metal Co.* v. *Bradford*, 214 U.S. 366, 381 (1909) (explaining that "he who first makes the discovery has done more than make the obvious improvement which would suggest itself

to a mechanic skilled in the art"); *id.* (upholding patentability because "[t]here is nothing in the prior art that suggests the combined operation of the Golding patent in suit"); *Mast, Foos, & Co.* v. *Stover Mfg. Co.*, 177 U.S. 485, 494 (1900) (examining whether claimed invention was "anything more than would have been suggested to an intelligent mechanic"); *Day* v. *Fair Haven & Westville Ry. Co.*, 132 U.S. 98, 102 (1889) (invalidating an invention because it "would naturally suggest itself to any mechanic, and that its use in that way is within the range of common knowledge and experience")

Because the established suggestion standard addresses the inventive choice, it is also precisely tailored to focus the obviousness inquiry on the basic purpose of the statutory nonobviousness requirement. As the Solicitor General explains (Br. 11), the patent system is intended to award patents only to those inventions that represent an actual contribution to the sum of human knowledge. If the knowledge expressed in the description of the invention would have been recognized without the incentives of a statutory exclusive right, patent protection is unnecessary and therefore unwarranted. But, by contrast, when other practitioners of the art *would not* have recognized the value of the combination, then the inventor has made a genuine contribution and – assuming the novelty and usefulness of the invention – a patent is appropriate. "The suggestion test is meant to discern whether there already was a suggestion to create what is claimed to be patentable, and thus, patent protection was not needed to prompt the invention's creation." Cotropia, *An Empirical Analysis*, *supra*, at 5. "In other words, when such a suggestion or motivation was present before the invention, one can conclude that there was no, or very little, need for an incentive from the patent system to spark the creation of the invention. With little or no barrier to the invention's creation due to the existence of a motivation or suggestion, the incentive of patent protection is not needed." *Id.* at 14.

B. The Suggestion Analysis Properly Balances the Interests of Patentees and Those Who Would Freely Practice the Art.

The patent laws fundamentally seek to maintain "the delicate balance * * * between inventors, who rely on the promise of the law to bring the invention forth, and the public, which should be encouraged to pursue innovations, creations, and new ideas beyond the inventor's exclusive rights." *Festo* v. *Shoketsu Kinzoku Kogyo Kabushiki Co.*, 535 U.S. 722, 731 (2001). The suggestion standard is designed to carefully maintain that balance. Significant evidence of the fact that it has succeeded lies in the views of all of the nation's major bar organizations composed of members who represent both patent plaintiffs and patent defendants – the American Bar Association, the American Intellectual Property Law Association, the Federal Circuit Bar Association, the D.C. Bar, the New York Intellectual Property Law Association, and the Intellectual Property Law Association of Chicago – which have endorsed the suggestion standard.

1. Section 103(a) protects against unwarranted determinations that an invention is obvious principally through the requirement that the obviousness determination be made from the perspective of "the time the invention was made." 35 U.S.C. 103(a). Congress thereby directed that patent examiners and courts should not deem patents obvious through the 20/20 lens of hindsight – *i.e.*, they should avoid "the temptation to read into the prior art the teachings of the invention in issue." *Graham*, 383 U.S. at 36. Although the government argues that the Federal Circuit "underestimates the capacity of courts and the PTO to avoid the influence of hindsight" (Br. 21), this Court in *Graham* recognized that "the judiciary * * * is most ill-fitted to discharge the technological duties cast upon it by patent legislation," such that the obviousness inquiry must be attentive to the danger of "slipping into use of hindsight." 381 U.S. at 36. That has indeed been a uniform theme of this Court's obviousness jurisprudence for more than a century. *Loom Co.* v. *Higgins*, 105 U.S. 580, 591 (1881) ("Now that [the invention] has succeeded, it may seem very plain to any one that he could have

done it as well. This is often the case with inventions of the greatest merit."). See also, *e.g.*, *Universal Oil Prods. Co.* v. *Globe Oil & Refining Co.*, 322 U.S. 471, 486 (1944); *Diamond Rubber Co.* v. *Consolidated Rubber Tire Co.*, 220 U.S. 428, 434-35 (1911); *Potts* v. *Creager*, 155 U.S. 597, 608 (1895).

After decades of experience, the Federal Circuit and its predecessor Court of Customs and Patent Appeals concluded that the suggestion requirement is a "critical safeguard," *In re Rouffet*, 149 F.3d 1350, 1357-58 (CAFC 1998), and represents "the best defense against the subtle but powerful attraction of a hindsight-based obviousness analysis," *In re Dembiczak*, 175 F.3d 994, 999 (CAFC 1999). Particularly given that most inventions represent incremental improvements, a standard that merely compares the invention with the prior art is most likely to produce the conclusion that the two are similar and therefore the new development was obvious. That is indeed the thrust of petitioner's repeated assertions that Engelgau is quite similar to prior art pedal designs. The suggestion standard combats that hindsight approach to the determination of obviousness by properly focusing the decisionmaker on identifying some reason that a practitioner in fact would have selected the particular prior art in question and combined it the manner claimed by the invention. As the court of appeals recognized, the correct conclusion on the current record is that there is no reason to believe that a practitioner of the art would have placed an ETC on pivot 54 of Asano, which is a large and complicated device.

2. On the other hand, the suggestion standard is attentive to the prospect of "overpatenting," and Congress's determination not to award patents for inventions that are, in fact, obvious. An essential feature of the Federal Circuit's standard is thus the flexibility discussed in Part I, *supra*, as it accounts for the myriad sources of potential evidence of a suggestion to combine the prior art.

The contrary claims of petitioner and its *amici* that the suggestion standard contributes to overpatenting rest on rhetoric unsupported by facts or a record. Petitioner fails to establish any of the premises of its claim: (i) that overpatenting is occurring in

any significant respect; (ii) that obviousness jurisprudence is a significant factor; or (iii) that the suggestion test in particular plays a causal role. Cf. Cotropia, *An Empirical Analysis*, *supra*, at 35 ("The suggestion test does not influence the final nonobviousness decision in nearly the number of cases suggested by recent criticism.").[7] In fact, the "assumption that either too many patents have issued, and/or the rate at which low quality patents issue is accelerating * * * * has not been empirically demonstrated." Petherbridge & Wagner, *supra*, at 19. As commentators explain with specific reference to this case: Neither "[t]he briefs [supporting petitioner] nor the sources supporting this view explain the causal link in any level of detail." *Id.* at 20. Another empirical study concurs: "The problem with the recent reports and the current argumentation before the Supreme Court in *KSR* is that none of the assertions being made are supported by recent empirical data." Cotropia, *An Empirical Analysis*, *supra*, at 3.[8]

---

[7] The Catropia study examined all Federal Circuit decisions considering nonobviousness of a patent claim from 2002 to 2005. It revealed that the suggestion test did not factor into a court's decision in "at least 43.1% of those cases where the court found the claim nonobvious or vacated a finding of obvious." Catropia, *An Empirical Analysis*, *supra*, at 34.

[8] In addition, "there are clearly a great many other plausible reasons for patent quality problems, such as under-funding at the PTO, perverse incentives among prospective patentees and examiners alike, etc." Petherbridge & Wagner, *supra*, at 20. Among other things, the subject matter of patents for which large numbers of people seek patents has greatly expanded in recent years to include, *e.g.*, DNA, mathematical algorithms, computer programs, living things, and business methods, as they become increasingly valuable to our economy. *See* F. Scott Kieff, *Property Rights and Property Rules for Commercializing Inventions*, 85 MINN. L. REV. 697, 700-701 (2000). In parallel, companies have rapidly developed defensive patent portfolios that may provide them with a bargaining chip for settlement in the event they become a defendant in a patent enforcement action. Mark A. Lemley, *Reconceiving Patents in the Age of Venture Capital*, 4 J. SMALL & EMERGING BUS. L. 137, 143 (2000). Other sources of the growth of patenting include cross-licensing in patent pools and standard-setting organizations, in which companies in concentrated indus-

An empirical study of the Federal Circuit's obviousness jurisprudence demonstrates, if anything, that the settled suggestion doctrine is an important means of combating overpatenting. Preliminarily, the data demonstrated that the Federal Circuit "does not have [a] 'pro-patentee' bias on the question of obviousness, and that lower tribunals are capable of establishing the obviousness of disputed claims." Petherbridge & Wagner, *supra*, at 45.[9] Moreover, what the authors found

> was quite surprising. The more TSM [*i.e.*, the suggestion test] was used, the lower the rate of nonobvious results. This finding suggests that TSM is not a great impediment to establishing obviousness. To the contrary, the more TSM appeared in Federal Circuit analysis, the less likely it was that the outcome of the analysis was nonobvious. This lends weight to the notion that TSM might be bringing a clarity to the law of obviousness that is helping rather than hindering the demonstration of obviousness. It also indicates that TSM is not a lever or tool that the Federal Circuit reaches to, simply to be pro-patentee, or to reach a nonobvious finding.

---

tries exchange patent portfolios to gain access to necessary related patents held by other companies in their industry and the perceived need on the part of start-ups to obtain patents in order to attract venture capital. *Id.* at 142-45. Finally, the PTO has grappled for years with insufficient staff and resources, leaving overworked patent officers with insufficient time to critically judge the utility of proposed patents. Eugene R. Quinn, Jr., *The Proliferation of Electronic Commerce Patents: Don't Blame the PTO*, 28 RUTGERS COMPUTER & TECH. L.J. 121, 123 (2002); John R. Thomas, *The Question Concerning Patent Law and Pioneer Inventions*, 10 HIGH TECH. L.J. 35, 100 (1995).

[9] The Petherbridge & Wagner study conducted a systematic examination of 362 Federal Circuit judicial opinions on the obviousness doctrine from 1990 to 2005. It revealed that the Federal Circuit's frequency with which it determines obviousness was the following: 57.8% of its opinions concluded a patent was obvious; 42.2% of its opinions concluded a patent was non-obvious. Petherbridge & Wagner, *supra*, at 41.

Id. at 49.[10]

III. Petitioner's Contrary Proposals for Overturning the Suggestion Standard Lack Merit.

Petitioner argues that this Court's precedents compel an inquiry into "synergy" while the Solicitor General offers yet a different proposed rule that looks to the innovativeness of the invention. Neither is supportable.

A. Petitioner's Proposed Obviousness Standard Cannot Be Reconciled with this Court's Decisions, the Statutory Text, or the Goals that Congress Was Pursuing.

Petitioner's proposed standard and the alternative offered by the Solicitor General cannot be reconciled with the statutory text or the purposes animating its enactment. As noted above, because the prior art underlying an invention will almost always be obvious as a matter of law, the inquiry into the obviousness of the invention "as a whole" properly focuses on the inventive choice – either the selection of specific prior art to be combined or the specifics of the way in which the combination is made. By contrast, petitioner and its *amici* argue that this Court should overturn the suggestion inquiry in favor of a standard that simply compares the invention with the prior art and ignores the inventive choice. Neither proposal is properly addressed to the

---

[10] Petitioner (Br. 46-47) cites discussions of obviousness in reports by the Federal Trade Commission and the government cites to the National Research Council (Br. 19), but those reports rest on merely a "perceived * * * trend" and a claimed "feel of the case law" (FTC, *To Promote Innovation* Ch. 4, at 9, 12) that has not been "empirically tested" (NRC, *A Patent System for the 21st Century* 3). "[T]he FTC and NRC reports and the briefs in support of the petition for certiorari in *KSR* fail to perform any empirical analysis to see if their conclusions are true—that the Federal Circuit had lowered the nonobviousness requirement and that the suggestion test is the cause." Cotropia, *An Empirical Analysis*, *supra*, at 10. The FTC moreover points to a general consensus that the "suggestion" test is valuable, and raises only concerns with "*applications* of the test." FTC, *To Promote Innovation*, Ch. 4, at 11 (emphasis added).

obviousness of the "whole" of the invention. Petitioner would look to a single consideration, asking "whether a person having ordinary skill in an art would have been *capable* of adapting extant technology to achieve a desired result * * *, not whether such a person would have had *motivation* to [do so]." Pet. Br. 16. The Solicitor General would look to whether the invention reflects an "extraordinary level of innovation." S.G. Br. 10 – a standard that compares the invention to the prior art in search of a qualitative judgment about the gap between the two. Such an inquiry has no relationship to the requirement of "obviousness" and in particular would ignore the essential question whether the inventive choice was obvious:

> A test which looks likely to the operation of the elements *after* they are combined must necessarily be premised on the unsound assumption that it is always obvious to take known things and combine them. It is the very unification of the elements, where the prior art fails to suggest such an action, that represents the advancement; and the test of patentability should be directed to this factor.

Herbert H. Mintz & C. Larry O'Rourke, *The Patentability Standard in Historical Perspective: "Invention" to Section 103 Obviousness* (1977), *in* Ultimate Condition 2:216 (1977). The statute deems an invention unpatentable only if "the combination was obvious, not merely its components." Rich, *Laying the Ghost of the "Invention" Requirement*, 14 FED. CIR. B.J. at 170.

Congress adopted the "obviousness" standard precisely to reject the inquiry into "innovativeness" that the Solicitor General now seeks to reintroduce. Prior to the adoption of Section 103(a), the courts inquired whether the patent truly reflected an "invention." This Court articulated the following standard: "[U]nless more ingenuity and skill * * * were required * * * than were possessed by an ordinary mechanic acquainted with the business, there was an absence of that degree of skill and ingenuity which constitute essential elements of every invention. In other words, the improvement is the work of the skilful mechanic, not that of the inventor." *Hotchkiss* v. *Greenwood*, 52 U.S. (11 How.) 248, 267 (1851). That is precisely the standard

that the government would apply under Section 103: the government asserts that the obviousness inquiry should be attentive to what it describes as "the core issue: Whether the claimed invention manifests the extraordinary level of innovation that justifies the award of congressional preserved rights to exclude others from practicing the invention." S.G. Br. 10. It notes the importance of the questions whether "the combination is within the grasp of a person of ordinary skill" (*id.* 10) and whether it "reflects an advancement beyond what would be expected from the exercise of ordinary skill in the relevant field at the time of the claimed invention" (*id.* 13).

"The first policy decision underlying Section 103 was to cut loose altogether from the century-old term 'invention.'" Rich, *Laying the Ghost of the "Invention" Requirement*, 14 FED. CIR. B.J. at 170. As *Graham* explains, "Congress has emphasized 'nonobvious' as the operative test of the section, rather than the less definite 'invention' language of [prior decisions]." *Graham*, 383 U.S. at 14. See also *infra* at 40-42 (explaining that Congress rejected the government's standard because it was too vague and produced inconsistent results). There is no warrant for this Court to re-adopt under the label "obviousness," the same standard that Congress rejected in adopting Section 103(a).

Congress also provided that an invention is not patentable if it "*would have* been obvious at the time the invention was made." 35 U.S.C. 103 (emphasis added). Under the statute's plain terms, it is not sufficient (as petitioner contends) that a hypothetical practitioner was possessed of skills that made him "capable" of creating the invention. Rather, the question is whether the practitioner – without any knowledge of the invention itself – actually "would have" been motivated to create the combination.

The proposals for overturning the settled suggestion inquiry are moreover an open invitation to determine obviousness with the bias of 20/20 hindsight, contrary to the statutory directive that the inquiry must be conducted from the perspective of "the time the invention was made":

> If identification of each claimed element in the prior art were sufficient to negate patentability very few patents would ever issue. Furthermore, rejecting patents solely by finding prior art corollaries for the claimed elements would permit an examiner [or accused infringer] to use the claimed invention itself as a blueprint for piecing together elements in the prior art to defeat the patentability of the claimed invention.

Yamanouchi Pharm. Co., Ltd. v. *Danbury Pharmacal, Inc.*, 231 F.3d 1339, 1343 (CAFC 2000).

Indeed, petitioner's standard is the *definition* of hindsight: it asks whether a practitioner of the art *could have done* what the inventor actually *did* do:

> [A]n obviousness assessment might break an invention into its component parts (A + B + C), then find a prior art reference containing A, another containing B, and another containing C, and on that basis alone declare the invention obvious. This form of hindsight reasoning, using the invention as a roadmap to find its prior art components, would discount the value of combining various existing features or principles in a new way to achieve a new result – often the very definition of invention.

Ruiz & Foundation Anchoring Sys., Inc. v. *A.B. Chance Co.*, 357 F.3d 1270, 1275 (CAFC 2004).

B. Petitioner's Reliance on this Court's Decisions in *Anderson's-Black Rock* and *Sakraida* Is Misplaced.

Petitioner characterizes the court of appeals' suggestion inquiry – which has been applied by dozens of judges in many hundreds of cases over the course of decades – as "a radical experiment by a lower court, an experiment that was undertaken in open defiance of this Court's authority." Pet. Br. 16. See also, *e.g.*, *id.* 19, 28-29, 32. The stridency of petitioner's rhetoric is a common and sure sign of weakness in the substance of its position. The Federal Circuit has not – overtly or covertly – failed to follow this Court's decisions. An assault on the integrity and

fidelity of federal judges to their sworn responsibilities is not a substitute for actual legal argument.

Petitioner is unable to reconcile – and nor does it attempt to – its position with the multi-factor *Graham* inquiry. Petitioner's discussion of *Graham* in its argument section is limited to one paragraph, omitting entirely the factors specified by this Court's decision. Br. 20. *Graham* called for a flexible standard. As the Solicitor General explains, "[t]his Court observed in *Graham* that Section 103(a)'s nonobviousness requirement codifies a 'functional approach.'" S.G. Br. 12 (quoting *Graham*, 383 U.S. at 3-4). The statute "does not dictate an inflexible formula for making the legal determination whether an invention as a whole would have been 'obvious.'" *Id.* at 13. According to the Solicitor General, *Graham* calls for "a highly contextual judgment." S.G. Br. 10. The Federal Circuit's standard, in turn, is designed "to address an issue of law not readily amenable to bright-line rules, as [the judges of that court] recall and are guided by the wisdom of the Supreme Court in striving for a 'practical test of patentability.'" *Alza*, 2006 U.S. App. LEXIS 22616, at *11 (quoting *Graham*, 383 U.S. at 17). Nor does petitioner have a coherent explanation for why this Court in *Adams* looked to whether there was any suggestion to combine the prior art in the manner claimed by the battery patent in that case.

Petitioner instead asserts that its proposed "capability" standard is compelled by two post-*Graham* decisions that refer to the "synergy" of a combination of prior art. Preliminarily, it bears noting that petitioner's reliance on a "synergy" standard to support its proposed "capability" test is illogical. A skilled practitioner of an art may be perfectly "capable" of assembling prior art that has a "synergistic" effect. Conversely, where the ordinary skill in the art is low, there are many "non-synergistic" combinations that a practitioner would not ordinarily be "capable" of assembling.

In any event, for the reasons given by several of petitioner's own *amici*, including notably the Solicitor General, petitioner misdescribes this Court's precedents. In the passages cited by petitioner, this Court simply "noted that a different result might

obtain if the combination produced a 'new or different function' or produced a 'synergistic result,' but the Court *did not* hold that either such consideration provided a definitive test for obviousness." S.G. Br. 14 (emphasis added). Put another way, the existence of "synergy" is one means of demonstrating that a person of ordinary skill in the art would not have been motivated to combine the prior art. If two pieces of prior art maintain the same function in the new invention as in the old, it is relatively more likely that it would be obvious to combine the two.

Petitioner relies on this Court's statement in *Anderson's-Black Rock* v. *Pavement Salvage Co.*, 396 U.S. 57, 61 (1969), that the patentee had not made the argument that the "combination of elements * * * result[ed] in an effect greater than the sum of the several effects taken separately." In fact, *Anderson's-Black Rock* explained that "the question of patentability of the combination turns on the meaning of 35 U.S.C. § 103 which the Court reviewed in the *Graham* case." 396 U.S. at 61-62. The Court then quoted the factors set forth in *Graham* and reiterated its "*admonish[ment]* that 'strict observance' of those requirements is necessary." *Id.* at 62 (emphasis added). *Anderson's-Black Rock* thus "explicitly endors[es] *Graham*'s reasoning." S.G. Br. 14. As Judge Rich put the matter with typical directness, "Anyone citing *Black Rock* as holding or even implying that synergism or a synergistic effect is essential to patentability is just plain crazy—or at least not a good lawyer." *Escaping the Tyranny of Words*, 14 FED. CIR. B.J. at 210.

Petitioner also relies on *Sakraida* v. *Ag Pro*, 425 U.S. 273, 282 (1976), in which this Court rejected the patentee's argument that the invention was non-obvious because it could "be characterized as synergistic." In fact, the Court ' adhered to the *Graham* framework in *Sakraida*." S.G. Br. 14. The Court reiterated the *Graham* factors, explaining that "[t]he ultimate test of patent validity is one of law, but resolution of the obviousness issue necessarily entails several basic factual inquiries." 425 U.S. at 280. In the language cited by petitioner, this Court merely responded to the court of appeals' conclusion in that case (citing *Sakraida*) that the invention "does achieve a synergistic result"

by stating that "[w]e cannot agree that the combination * * * can properly be characterized as synergistic." *Id.* at 282. "That is all it said. It simply expressed disagreement with the lower court's view that there was a synergistic result. It did not say there must be one." Rich, *Escaping the Tyranny of Words*, 14 FED. C[illegible] B.J. at 211.[11]

Nor is there any inconsistency between the Federal Circuit's standard and this Court's conclusion that the particular patents in *Anderson's-Black Rock* and *Sakraida* were obvious. The patent in *Anderson's-Black Rock* addressed a device for joining strips of asphalt. The patent mounted a heater on a paving machine. The heater softened the edge of adjoining asphalt strips, allowing multiple strips to be joined smoothly. The prior art included both paving machines and the use of a heater to soften asphalt. 396 U.S. at 58-59. The patentee did not claim any benefit to the location of the heater; "[i]t is hung on the paver merely because that is a convenient place for it when heating the longitudinal joint of the pavement." *Id.* at 59. "[T]he presence of the radiant-heat burner in the same machine with the other elements is

---

[11] Of note, two obviousness cases decided subsequent to *Anderson's-Black Rock* both cited *Graham*; neither mentioned "synergism." *Dann* v. *Johnston*, 425 U.S. 219 (1976); *Deepsouth Packing* v. *Laitran Corp.*, 406 U.S. 518 (1972). The defendant and its *amici* in *Dann* argued for reversal under the "synergy" standard. Br. for Pet., *Dann* 29.

Petitioner contends that in *Anderson's-Black Rock* and *Calmar* (decided together with *Graham*) this Court found the inventions obvious notwithstanding that the lower court had found no suggestion to combine the prior art. Pet. Br. 21, 23, 24. That is inaccurate. In each of those cases, the lower court had found no suggestion *in the prior art itself*. See *Anderson's-Black Rock*, 474 F.2d at 171 ("None of the *prior art references* proffered by defendant in this case, independently or combined, suggest that plaintiff's novel flooding mechanism was an obvious advancement in the art." (emphasis added)); *Calmar, Inc. v. Cook Chem. Co.*, 336 F.2d 110, 113 (CA8 1964) ("there [was] nothing *in the prior art* suggesting Scoggin's unique combination of these old features"). That is a dramatically different standard than the one applied by the Federal Circuit, which as noted *supra* at 17-20 permits the conclusion of obviousness to be based on inherent as well as express suggestions.

not critical or essential to the functioning of the radiant-heat burner in curing the problem of the cold joint." *Id.* at 60.

The outcome of *Anderson's-Black Rock* is perfectly consistent with the Federal Circuit's standard. The "suggestion" to combine the prior art existed in both the nature of the problem to be solved – which called for softening the asphalt by heat – and the prior art – which already provided the knowledge to do so. As the court of appeals has explained, "No explicit suggestion to combine the prior art references would have been necessary because the invention merely improved the efficiency of the already-known process of laying pavement through the already-known method of merging two sections of asphalt through reheating the earlier laid section—both of which would have been common knowledge of ordinary artisans in the field of laying asphalt." *Dystar*, 2006 WL 2806466, at *12.

The patent in *Sakraida* addressed a system for cleaning animal waste from barns that called for using a tank to dump large volumes of water very quickly, creating a sheet of moving water that moved down a sloped floor. The prior art included water tanks and designs for sloped floors with water distributed through hoses.

As in *Anderson's-Black Rock*, the prior art and the nature of the problem to be solved both suggest the combination. The prior art was all directed at the same problem as confronted the inventor in *Sakraida* – cleaning a barn. Under Federal Circuit precedent, as the court of appeals has explained, "there would have been no need for 'evidence' of motivation to combine a prior art reference with a universally-known physical principle to achieve more powerful and simultaneous sweep of water." *Dystar*, 2006 WL 2806466, at *13.

IV. The Solicitor General's Proposed "Innovation" Standard Would Introduce Considerable Uncertainty and Inconsistency into Patent Determinations.

A principal goal of Congress in enacting the obviousness requirement of Section 103 was to facilitate "uniformity and definiteness." *Graham*, 383 U.S. at 18. That is an important

guiding consideration, for as this Court has explained, uniformity "is essential to promote progress, because it enables efficient investment in innovation." *Festo*, 535 U.S. at 730-31. Section 103 is applied to many tens of thousands of patent applications annually by many hundreds of patent examiners and federal district judges. It is essential that each of those decisionmakers have a common framework that produces predictable results. A standard that instead calls for a gestalt, subjective determination of obviousness inevitably will produce substantially disparate results between examiners and among examiners and courts. The result will be to deter innovation (given doubts about the ability to obtain a patent) and encourage litigation (in an attempt to have the courts second guess patent examiners' findings) and encourage patent infringement (by reducing risk and cheapening its cost). Moreover, one of the primary reasons for creating the Court of Appeals for the Federal Circuit in 1982 was to reduce the disparity among the regional courts of appeals in the way patent cases were decided. If the Court were to adopt a totally subjective, "know it when you see it" test of obviousness, as suggested by petitioner and its *amici*, we would essentially return to the days when the outcome of a patent litigation depended on the judicial officers who tried it and not on the facts and the law. It would also encourage forum shopping to seek judges disposed to a particular invention gestalt.

The longstanding suggestion inquiry has produced a set of objective rules that is, to the extent possible, applied uniformly by patent examiners and courts, and that is well understood by the specialized bar in the field. "With respect to the doctrine of obviousness, it appears that the Federal Circuit has been fulfilling Congress's promise to develop a patent law that reduces uncertainty." Petherbridge & Wagner, *supra* at 45. The same study concludes in particular that the test provides "the Patent Office the roadmap to establishing obviousness":

> Because TSM somewhat objectifies the test for obviousness, it creates a target at which the Patent Office can aim. It further provides a flexible and sweeping linguistic formulation that the Office can use to characterize its findings on

> the question. The finding of TSM *vel non* has been held by the court to be of a factual quality, and therefore relatively immune from reversal.

Id. at 55.

By contrast, the Solicitor General's proposed "innovation" standard promises to produce great inconsistency in the administration of the patent laws. Indeed, the Solicitor General's brief is notable for the fact that, although it argues for overthrowing a standard that has been consistently applied for four decades, it does not articulate how its proposal would be implemented and uniformly applied. The government does not indicate how "innovation" is to be measured, particularly across divergent industries. Remarkably, it does not even attempt to articulate on what basis it believes that the invention in this case is (presumably) not sufficiently innovative to deserve patent protection, or the factors that would go into such a determination.[12] For example, is it an "innovation" to fix the throttle control to the support structure when all the prior art took a contrary approach? In a field -- such as pedal design – that is filled with dozens of patents, what would constitute a genuine patentable innovation, and what proportion of the patents issued under the current suggestion inquiry are sufficiently lacking in innovation that they would properly be invalidated in litigation? In a field of law that depends on certainty, the government has floated a proposal that invites great confusion.

This concern is not merely rhetoric. As discussed *supra* at 31-33, Congress adopted the "obviousness" standard of Section 103(a) precisely to supplant the previous innovation inquiry that the government now asks this Court to again adopt. It did so because it concluded that focusing instead on obviousness would have a "stabilizing effect and minimize great departures" by judges and examiners under the prior invention standard. S. Rep. No. 1979, at 6 (1952); H. Rep. No. 1923, at 7 (1952). See *Dann* v. *Johnston*, 425 U.S. 219, 225-26 (1976).

---

[12] The government examines the invention only with respect to the existing suggestion standard. See *infra* Part V.

The experience under the standard the government proposes was not positive and Congress determined to change it. As described by Judge Rich, the principal author of Section 103, "it should be obvious to any schoolchild that merely calling something an 'invention,' or its creator an 'inventor,' is no standard at all. It is merely a label, indicative of a judicial decision otherwise arrived at." Rich, *Laying the Ghost of the "Invention" Requirement*, 14 FED. CIR. B.J. at 166. Learned Hand aptly described the test "as a fugitive, impalpable, wayward, and vague a phantom as exists in the whole paraphernalia of legal concepts." *Harries* v. *Air King Prods. Co.*, 183 F.2d 158, 162 (CA2 1950); *Lyon* v. *Bausch & Lomb Optical Co.*, 224 F.2d 530, 536 (CA2 1955) ("The variants [on the invention standard] were numberless; and 'invention' became perhaps the most baffling concept in the whole catalogue of judicial efforts to provide postulates for indefinitely varying occasions."). "The imprecision of the 'invention' standard resulted in an inconsistent and unpredictable body of law because it required that the decision of patentability be based ultimately upon the subjective whims of the reviewing court." *Republic Indus., Inc.* v. *Schlage Lock Co.*, 592 F.2d 963, 967 (CA7 1979). See also *Rengo Co. Ltd.* v. *Molins Mach. Co., Inc.*, 657 F.2d 535, 542 n.10 (CA3 1981) ("it seems clear that Congress wished to unify and simplify the multifarious standards that had developed concerning 'invention'"); *Hadco Prods., Inc.* v. *Walter Kidde & Co.*, 462 F.2d 1265, 1269 (CA3 1972) ("With the addition of § 103 to the Patent Act of 1952, the Congress expressed its intent to shift judicial focus in determining the validity of patents by 'emphasiz[ing] nonobviousness as the operative test of the section, rather than the less definite invention language' previously utilized by the courts, which had led to a considerable divergence in decisions.").

In particular, Congress adopted the obviousness inquiry in response to an inconsistency in patenting that arose from "the free rein often exercised *by [patent] examiners* in their use of the concept of 'invention.'" *Ibid.* (emphasis added). The government, by contrast, seeks to introduce into patent law and practice precisely the uncertainty that led Congress to adopt Section 103

in the first instance. The Solicitor General avowedly appears in this Court as an advocate for the PTO. S.G. Br. 1. The first line of inquiry with respect to obviousness is the patent examiners within that office, which has the administrative responsibility to review and resolve patent applications. The Federal Circuit, in turn, reviews rulings of the PTO, currently under the suggestion standard. The PTO, like every administrative entity in the government, would prefer to be subject to less rigorous judicial oversight. So the government has proposed an alternative standard that both (a) is substantively vague and calls for subjective judgments – here, whether the invention reflects an "extraordinary level of innovation" – that are inherently subjective and thus not susceptible to easy reversal, and (b) is procedurally highly deferential to the agency. The government's position thus has little to do with the appropriate strictness of the standard of patentability and everything to do with an agency's attempt to wrestle itself free from what it regards as excessive judicial meddling in its decisionmaking.

The Solicitor General thus openly argues in this case that the Federal Circuit has been unduly rigorous in its review of administrative obviousness findings and urges this Court to direct the Federal Circuit to show greater deference. That central point in the government's brief has *nothing* to do with this case, in which the patent examiner *granted* the patent and the court of appeals' decision embraces the examiner's conclusions. See Pet. App. 5a (stating that examiner's determination may be overcome only with "clear and convincing evidence").

It should be noted, however, that the data regarding the relationship between the PTO and the Federal Circuit contradict the Solicitor General's assertions, which notably do not rest on any empirical foundation. To the extent the PTO is reversed, the suggestion standard is not the cause. "The data indicates that the USPTO, at least at the Federal Circuit level, does not have a particularly difficult time successfully proving a patent claim obvi-

ous." Cotropia, *An Empirical Analysis*, *supra*, at 30.[13] The actual data "stand[s] in sharp contrast to claims that the suggestion test has caused the nonobviousness requirement to lower, particularly in the context of the USPTO. Instead, the suggestion test plays a fairly small role in the court's nonobviousness jurisprudence." *Id.* at 5. According to another extensive study, the suggestion test does not "present a 'substantial obstacle' to the Patent Office when it comes to establishing that claimed subject matter [is] obvious." Petherbridge & Wagner, *supra*, at 54.

The same flexible factors embodied in the "implied suggestion" standard apply to obviousness determinations by the PTO and district courts. See *supra*, at 17-20. And on that basis, the Federal Circuit consistently affirms PTO determinations that an invention is unpatentable because it would be obvious in light of, for example, the problem to be solved or the ordinary skill in the art. See, *e.g.*, *In re Johnston*, 435 F.3d 1381, 1386 (CAFC 2006) (motivation to combine because teachings of each references are in the same field and deal with related subject matter); *In re Inland Steel Co.*, 265 F.3d 1354 (CAFC 2001) (motivation to combine where prior art is directed at same problem); *In re Gartside*, 203 F.3d 1305, 1320 (CAFC 2000) (motivation to combine where prior art directed to same problem); *In re Huang*, 100 F.3d 135, 139 n.5 (CAFC 1996) (motivation to modify the prior art in light of problem to be solved by the invention).[14]

---

[13] The Catropia study revealed that 86.79% of the PTO's obvious findings are affirmed by the Federal Circuit. Catropia, *An Empirical Analysis*, *supra*, at 28-29.

[14] The Solicitor General suggests in passing that it may be appropriate to adopt a presumption of obviousness. Such a presumption could only apply to proceedings before the PTO, because Congress has expressly provided that in litigation the patent is presumed to be valid. 35 U.S.C. 282. The question is accordingly not presented here. The logistical burdens on patent applicants under such a proposal would be enormous, and perhaps insuperable. "[P]roving that an invention is nonobvious would require collecting and addressing a nearly infinite body of prior art, which is virtually impossible." Philippe Signore, *There is Something Fishy About a Presumption of Obviousness*, 84 J. PAT. & TRADE-

The proposals of petitioner and the Solicitor General would also introduce substantial incompatibility between United States and foreign patent regimes. Contra Pet. Br. 50. The European Patent Convention (Art. 52(1)) awards patents for inventions "which involve an inventive step." As explained by the European Patent Office's Technical Board of Appeal, "the point is not whether the skilled person could have arrived at the invention by adapting or modifying the closest prior art, but whether he would have done so because the prior art incited him to do so in the hope of solving the objective technical problem or in expectation of some improvement or change." T 2/83, OJ 6/1984, 265. Canada, which notably issued a patent for the invention in this case, essentially follows the European Patent Office's analysis. See *Hoechst* v. *Halocarban (Ont.), Ltd.*, 2 S.C.R. 929, 944 (1979); *Bayer AG* v. *Apotex, Inc.*, 60 C.P.R. (3d) 58, 81-82 (Ont. G.D. 1995), *aff'd*, 82 C.P.R. (3d) 256 (Ont. C.A. 1998). The most recent jurisprudence from Japan looks to whether there is a motivation to combine. Tokyo IP High Court, Case No. 2005(gyo-ke) 10490 (June 29, 2006), *English summary at* www.asamura.jp/judgment/e_judgment/e_hei17(gyo-ke)10490.html.

V. Although Not Before This Court, the Federal Circuit's Determination that Petitioner Was Not Entitled to Summary Judgment Was Entirely Correct.

The district court in this case granted petitioner summary judgment on its claim that the Engelgau invention was obvious. Engelgau claims an ETC mounted to the support of a pedal system and responsive to a pivot that supports the pedal apparatus. Petitioner's carefully articulated argument, which the district court accepted, was that an ordinary practitioner of the art would have placed the CTS 503 electronic controller on the first pivot

---

MARK OFF. SOC'Y 148, 157 (2002). Such a substantial change in doctrine is accordingly more appropriately addressed legislatively. Congress, for example, considered – but did not adopt – a bill that would have adopted such a presumption for business method patents. Business Method Patent Improvement Act of 2001, *discussed in* Philippe Signore, *supra*, at 149.

pin (54) of the Asano pedal system. See App. 1a, *infra* (Asano illustration); App. 5a, *infra* (petitioner's demonstrative).

The Federal Circuit reversed under its suggestion standard, principally reasoning that the district court had failed to make findings explaining why a practitioner would have combined the prior art identified by petitioner in the manner claimed by Engelgau. The district court had utterly failed to explain why a pedal designer would have put a CTS 503 on the support *of the Asano device*.

The logic of that ruling under the suggestion standard is unassailable. In attempting to invalidate the Engelgau patent, petitioner was required to provide clear and convincing evidence. In seeking summary judgment, petitioner was required to prove that there were no material disputed facts; any such disagreements were to be construed in respondent's favor. Petitioner did not come close to making the required showing, and indeed summary judgment would have been inappropriate under any standard. Petitioner did not show, and the district court did not find, any reason that a pedal designer would have wanted to place an electronic throttle control on the support structure of the Asano device.

Certainly, no designer would use Asano to solve the problem that faced Engelgau: designing a small and compact pedal system, which Engelgau was required to do so that the pedal system would not interfere with the heating duct. Asano, it is undisputed, is a large and complicated pedal system. As in this Court's *Adams* decision, in which various factors discouraged the combination (see *supra* at 24-25), such "a reference that 'teaches away' from a given combination may negate a motivation to modify the prior art to meet the claimed invention." *Ormco*, 2006 U.S. App. LEXIS 22306, at *20.[15]

---

[15] The district court thus erred in deeming it irrelevant that Asano could not have solved the "problem" confronting Engelgau. According to the district court, Engelgau "contains none of the limitations that allegedly make the preferred embodiment of the pedal assembly structurally less complex than the Asano pedal assembly." Pet. App. 42a. That misses the

Nor was there any other reason for a designer to choose Asano. The district court had found an incentive to place an ETC on the support of an adjustable pedal system to solve an entirely different problem: wire chafing. But as the court of appeals explained, that finding is doubly flawed. It both suffers from the same analytical failure (because it does not explain why the designer would use the large and complicated Asano pedal system) and in any event rests on the unsupported assertion that an inventor would perceive a problem with wire chafing in adjustable pedal systems. See generally Pet. App. 8a-9a. Finally, the court of appeals reasoned that even if none of the foregoing were true, the district court had erred by resolving disputed issues of material fact when the only two neutral experts in the case had provided opinions concluding that the design of Engelgau is not obvious. See *id.* at 15a-16a.

It is therefore not surprising that, in this Court, petitioner has chosen not to challenge the court of appeals' evaluation of the summary judgment record in this case. Petitioner elected not to raise the issue in the petition for certiorari or its brief on the merits. Rather, petitioner's argument is that the Federal Circuit's long-settled standard is flawed root and branch and must be overturned outright.[16]

---

relevant point: an inventor faced with the problem confronted by Engelgau would not have turned to the large and complex design of Asano.

[16] Although petitioner complains in a footnote in its recitation of the statement of the case that the settled "clear and convincing evidence" standard is improper, that question is not before this Court, as it is neither encompassed by the question on which certiorari was granted nor otherwise raised in the petition for certiorari. Nor is it necessary to reach that question, given that petitioner has not challenged the court of appeals' application of the suggestion standard to the facts of this case. But in any event, the clear and convincing evidence standard is well founded because the expert patent examiner has considered the question and deemed the invention non-obvious. *Radio Corp. of Am.* v. *Radio Eng'g Labs.*, 293 U.S. 1, 2 (1934) ("clear and cogent evidence" required); *id.* at 7 ("convincing evidence of error") (collecting cases).

The Solicitor General nonetheless seeks to resuscitate the issue. Br. 27-29. But questions not raised by the parties are waived. See *Gilmore* v. *Utah*, 429 U.S. 1012, 1017 n.6 (1976). This Court does not ordinarily reach issues raised only by an *amicus curiae*, see *Kamen* v. *Kemper Fin. Servs.*, 500 U.S. 90, 97 n.4 (1991), and the Solicitor General does not identify any consideration that would justify a contrary approach in this case. Indeed, there is every reason for this Court to adhere to its ordinary practice: this case was decided on summary judgment and the court of appeals simply remanded to the district court for further proceedings on the question whether Engelgau is obvious. This Court consistently seeks to avoid addressing fact-

---

Petitioner separately contends that the clear and convincing standard should not apply in cases, such as this one, in which the defendant seeks to invalidate a patent on the basis of prior art that was not before the patent examiner. For precisely the same reasons, that issue is not presented here. But in any event, petitioner is incorrect because the patent examiner was presented with prior art that has the relevant feature of the art now cited by petitioner. According to petitioner, Asano's unique feature is that it has a pivot that is fixed to the pedal's support bracket. The patent examiner had before him, and specified in the Engelgau patent that he considered, another adjustable pedal system with a fixed pivot: the Rixon '183 system (Patent No. 5,632,183). See App. 6a, *infra* (28, in red). The burden of proof logically is reduced only when the petitioner is relying on "more pertinent" prior art. *Uniroyal* v. *Rudkin-Wiley Corp.*, 837 F.2d 1044, 1050 (CAFC 1988). Otherwise, defendants seeking a declaration of invalidity would always circumvent the clear and convincing evidence standard by citing trivially different prior art in litigation than was cited before the examiner.

In a footnote, petitioner contends that the examiner allowed the patent only because "[r]espondent[] amended [the claim] to recite a pivot whose position remains constant while the pedal arm moves during adjustment, and suggested that no such *type* of adjustable pedal assembly existed in the prior art." Br. 33 n.22. That is irrelevant but in any event incorrect. As just noted, the pivot in Rixon '183 is fixed. Moreover, the examiner's nonobviousness determination turned on the fact that the ETC was fixed, not that the pivot was fixed. That conclusion is incontrovertible because the examiner granted a patent on another claim which does not specify that the pivot is fixed.

bound issues in such an interlocutory posture. See *S. Fla. Water Mgmt. Dist. v. Miccosukee Tribe of Indians*, 541 U.S. 95, 111 (2004); *Bd. Of Trs. v. Fox*, 492 U.S. 469, 474 n.2 (1989).

But the government's argument is not a basis for reversal because it ignores the procedural posture of this case and the conclusions of the court of appeals. The government maintains that Engelgau is invalid in light of a particular combination of the Asano pedal system and an ETC, albeit a different combination than the one that petitioner hypothesizes. That assertion ignores the heart of the court of appeals' reasoning: (i) that the district court made no findings – much less findings reflecting clear and convincing evidence – that a practitioner of the art of pedal design would have placed an ETC on the support of Asano; and (ii) that the one-sided expert testimony renders the question a disputed issue of material fact. The Solicitor General never addresses the essence of the Federal Circuit's reasoning, and in particular offers no explanation for why a designer would select the complicated Asano device.

Equally important, the Solicitor General's new theory of obviousness is no basis for reversing the Federal Circuit for the straightforward reason that it does not render Engelgau obvious. To render a patent obvious, the prior art applied under the defendant's theory must produce the invention in question. In patent parlance, it must teach or suggest the whole invention set forth in the challenged patent. *Stratoflex, Inc.* v. *Aeroquip Corp.*, 713 F.2d 1530 (CAFC 1983). The government's theory simply does not do so.

Petitioner's theory of obviousness was that a designer would have placed an ETC on pivot pin 54 of Asano. It made that very specific argument because, if it were correct, petitioner thought that it would render Engelgau obvious.[17] The Solicitor

---

[17] In fact, it is not correct. The Engelgau patent claims an ETC that is (a) responsive to a pivot that supports the pedal assembly, and (b) that provides an *axis* about which the pedal rotates. Petitioner falsely claims that in Asano, both those functions are served by the first pivot axis, pivot 54. In fact pivot 54 is not responsive to movement of the pedal because it

General's theory of obviousness is different. It contends that a designer would have placed an ETC on the *second* pivot axis of Asano, pivot 60. That is a completely different design than Engelgau. Pin 60 of Asano does not pivotally support the pedal system; it plays no support role at all. Nor does the pedal of Asano rotate around pivot 60, which is attached to the support bracket of Asano only as a convenient place to leave it fixed in place. See App. 1a, *infra* (Asano illustration).

The government thus argues that "a person having ordinary skill in the art * * * would have recognized the advantage of incorporating an electronic sensor in Asano's adjustable gas pedal assembly and placing the electronic sensor *at the very same location as the mechanical linkage* [of the throttle control]." Br. 29 (emphasis added). As the illustration of Asano makes clear, the mechanical linkage cited by the government (58, in blue) attaches to the support at the second pivot axis (60, in green), not at the first pivot axis (54, in red). Contrary to the assertion of the government that its theory is what "[t]he district court correctly concluded" (*ibid.*), petitioner made no such argument and the district court found no such thing. As noted, the theory argued below was that the ETC pivot pin would attach to pivot 54.

The difference between the theories of the government and petitioner is no accident; the engineering principles involved are significant. The government proposes a theory because it recognizes a significant illogic in petitioner's argument. Pivot 54 suffers from the problem that Asano was intended to solve – the constant ratio problem. Even on the assumption that pin 54 of Asano would be made to rotate, but see *supra* at 48 n.17, the rotation of that pivot would vary considerably depending on how far the pedal had been moved fore or aft in the footwell. That is the reason that Asano includes a complicated series of mechanical linkages leading to the second pivot axis (60). No designer would do as petitioner suggests and place an ETC on the first pivot axis of a device that has its *very purpose* to correct the dis-

---

rotates in response to movement of the pedal. To the contrary it is instead a stationary structure. This is a critical difference.

torted information that would be transmitted through that pivot. So the government recognizes that a pedal designer looking at Asano would instead place the ETC on the second pivot (60), which does not suffer from the constant ratio problem.

Particularly relevant for present purposes, the government's theory of obviousness argues against petitioner's own theory and thus demonstrates the wisdom of the court of appeals' conclusion that the case should be remanded for fact-finding. Petitioner argues that it would be "obvious" to place the ETC on pivot 54. The government argues that it would be "obvious" to place the ETC in a different place with very different engineering characteristics. Which is it? In fact, it is neither. The court of appeals correctly concluded that, on the record as it stands, there is no reason that a designer would have selected Asano at all. The assertions of petitioner and the Solicitor General to the contrary are classic hindsight.

But it is in any event not necessary to reach the government's new theory of obviousness. This argument was not presented to the district court or the court of appeals, neither of which had the opportunity to consider it. Addressing this new issue in this posture in this closely watched case would also imply an obligation on the part of the judiciary to search out grounds for deeming patents obvious that are not presented by the parties, a substantial and burdensome departure from ordinary practice. The judgment accordingly should be affirmed.

CONCLUSION

For the foregoing reasons, the judgment of the court of appeals should be affirmed.

Respectfully submitted,

Kenneth C. Bass, III
Robert G. Sterne
STERNE, KESSLER,
GOLDSTEIN & FOX P.L.L.C.
1100 New York Ave., NW
Washington, DC 20005

Rodger D. Young
Steven Susser
David Poirier
YOUNG & SUSSER, P.C.
26200 American Drive
Suite 305
Southfield, MI 48034

Samuel J. Haidle
David M. LaPrairie
HOWARD & HOWARD
ATTORNEYS, P.C.
39400 Woodward Ave.
Suite 101
Bloomfield Hills, MI 48304

Thomas C. Goldstein
(*Counsel of Record*)
Michael A. O'Shea
Garreth A. Sarosi
Christopher R. Pudelski
Sarah C. Rispin
AKIN GUMP STRAUSS
HAUER & FELD, LLP
1333 New Hampshire Ave., NW
Washington, DC 20036
(202) 887-4060

Tracy L. Casadio
Elizabeth H. Rader
AKIN GUMP STRAUSS
HAUER & FELD, LLP
2029 Century Park East
Suite 2400
Los Angeles, CA 90067

APPENDIX

"Asano"
(U.S. Patent 5,010,782 - Fig. 5)

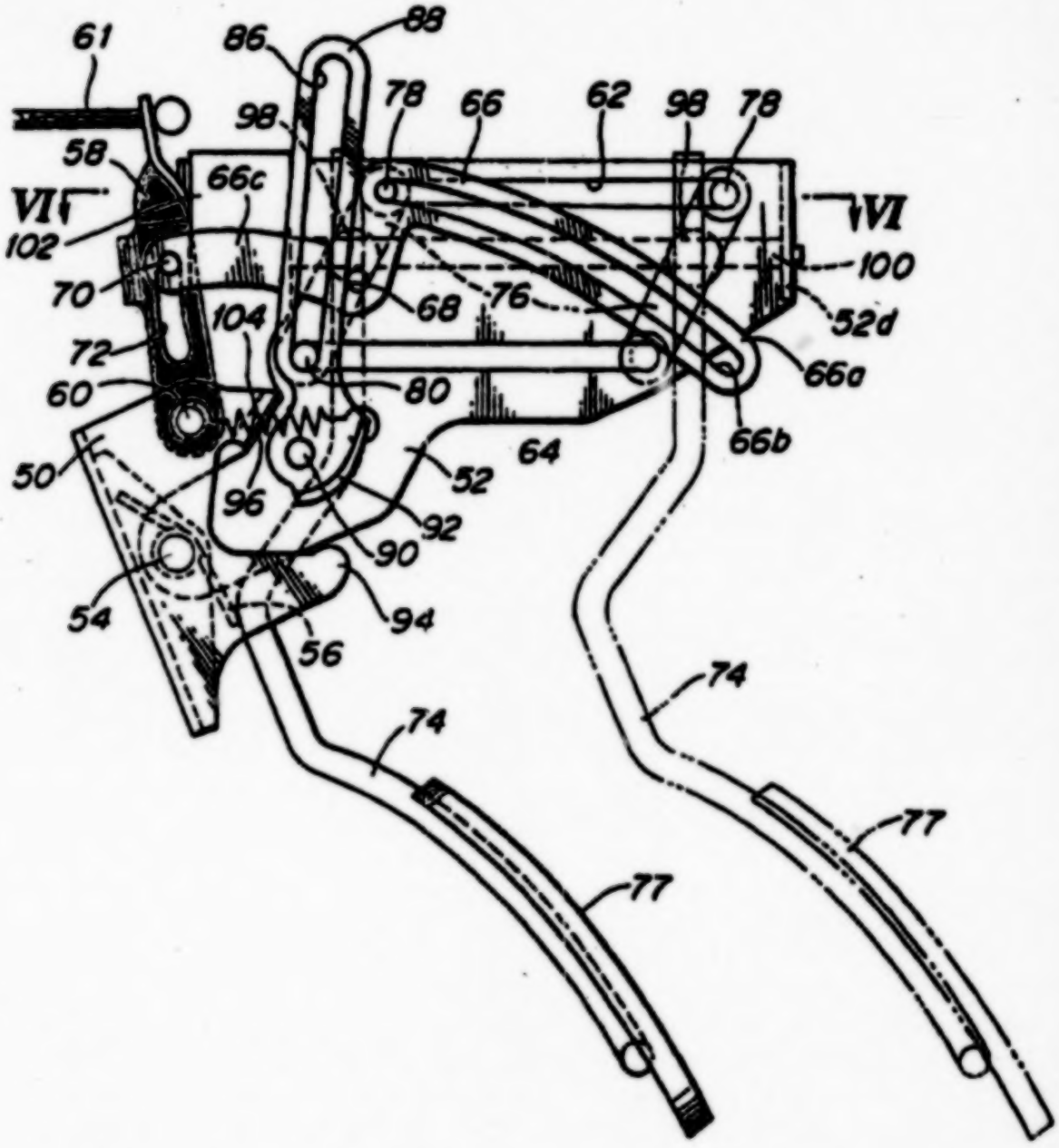

"Rixon '593"

(U.S. Patent 5,819,593 - Fig. 5)

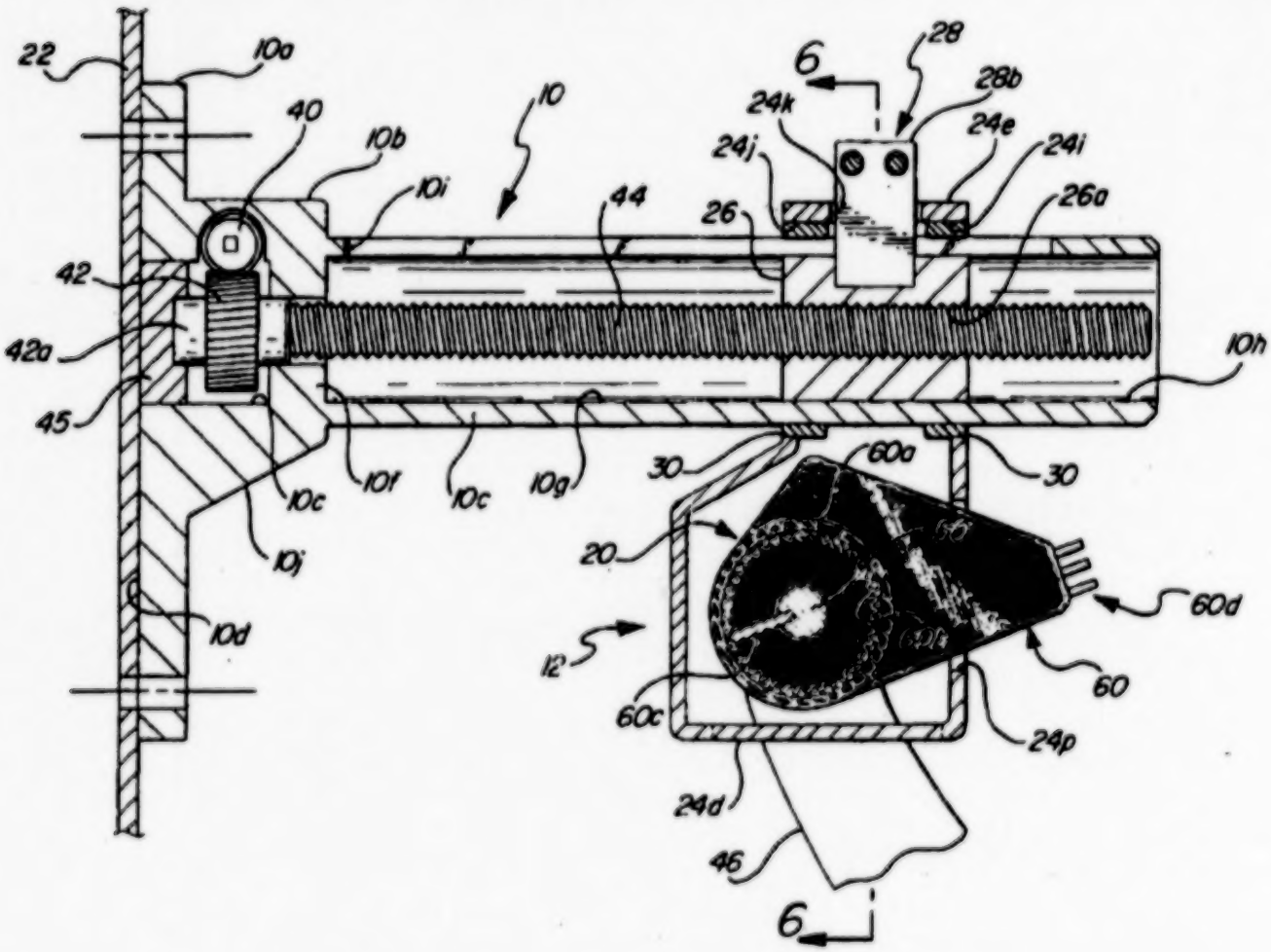

"Engelgau"

(U.S. Patent 6,237,565 - Fig. 2)

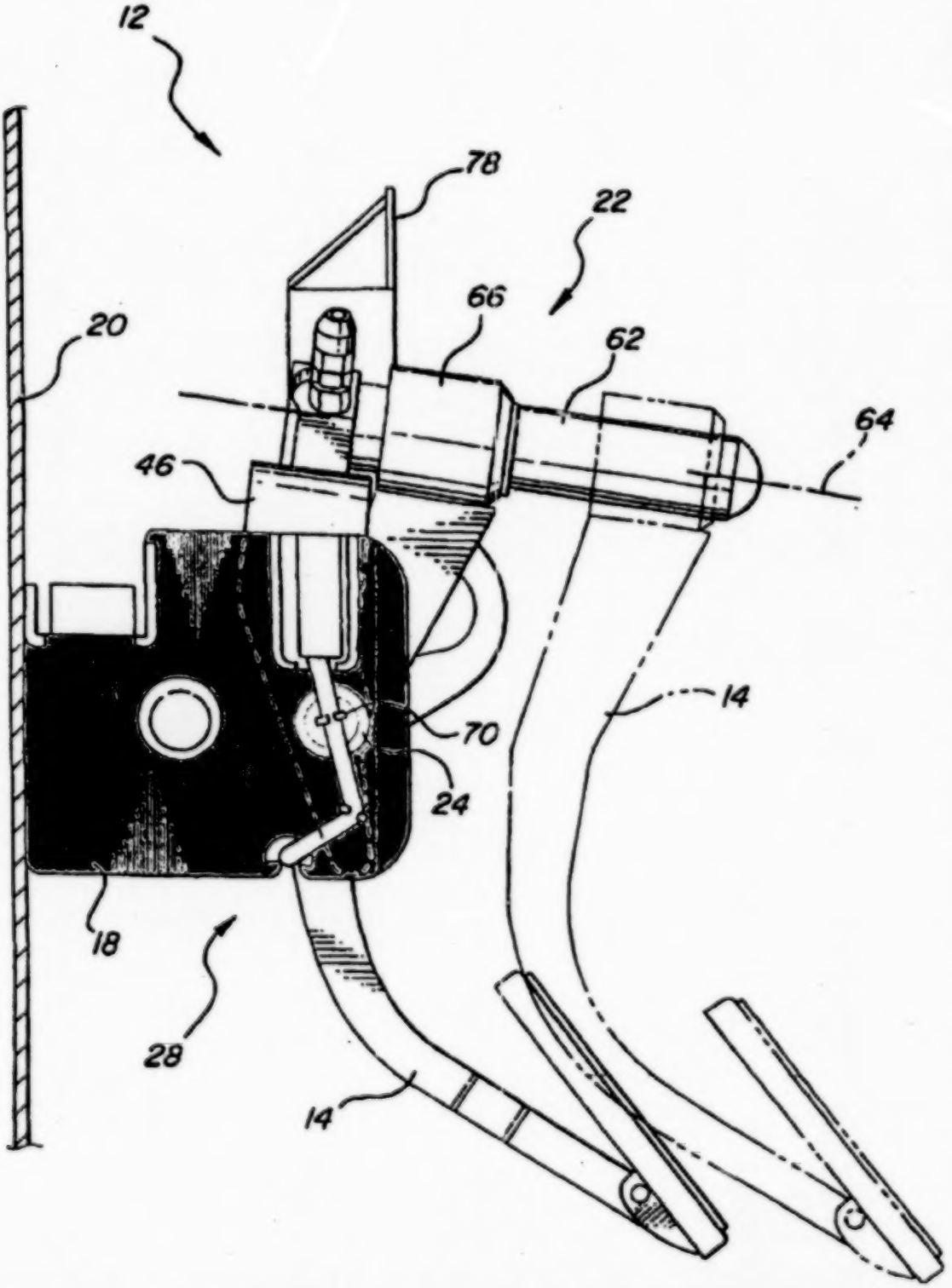

"Engelgau" - Angle View

(U.S. Patent 6,237,565 - Fig. 4)

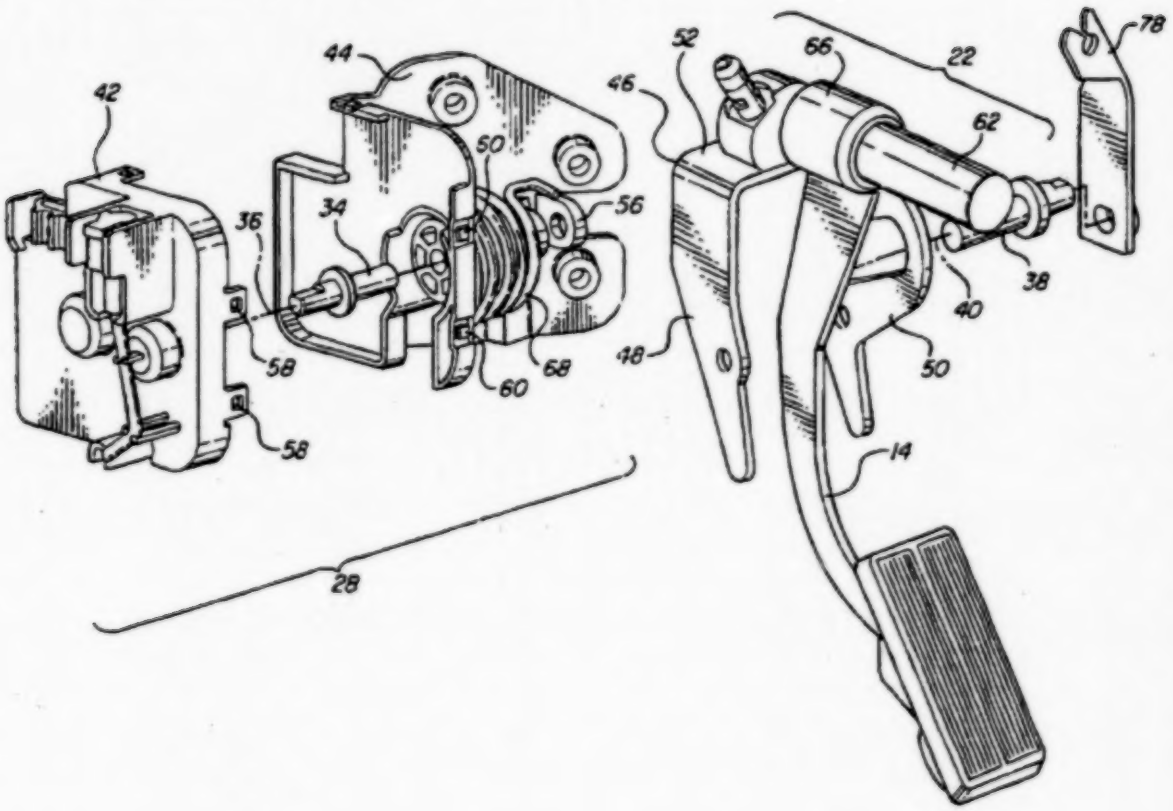

Petitioner's Demonstrative

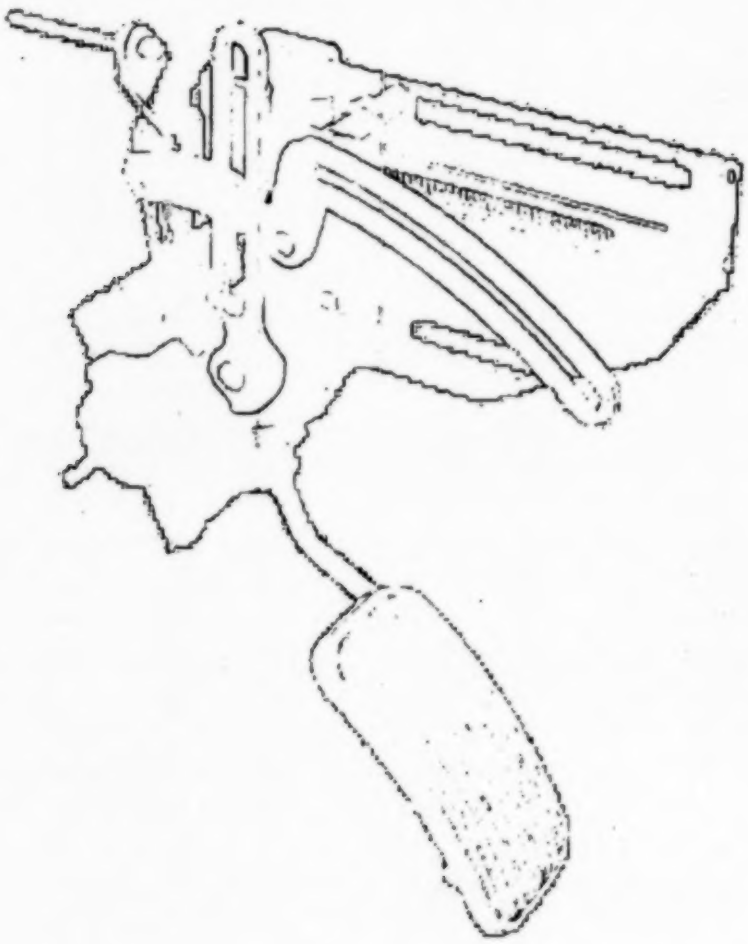

"Rixon '183"

(U.S. Patent 5,632,183 - Fig. 2)

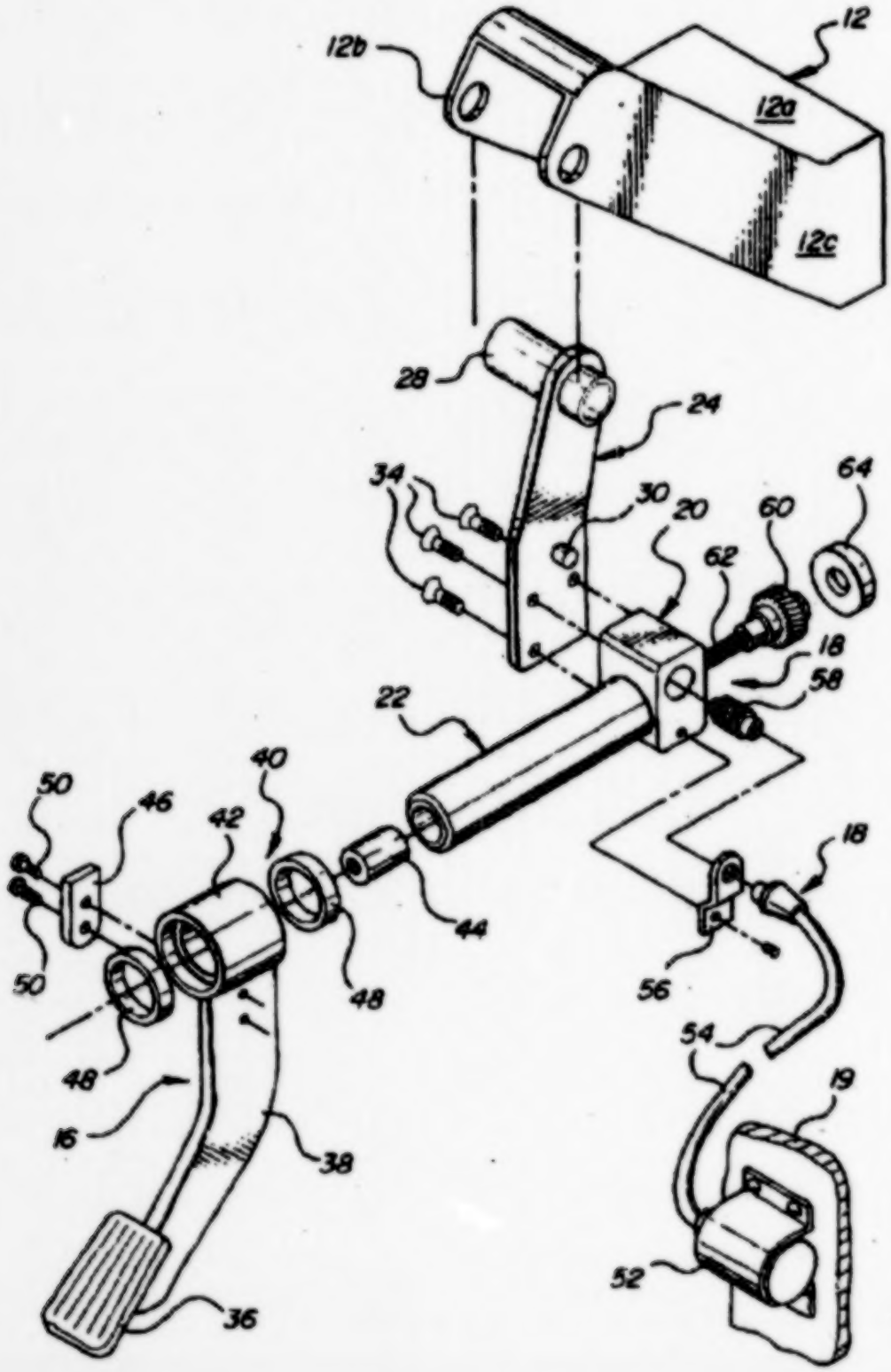

773

51

No. 04-1350

SUPREME COURT, U.S.
FILED
NOV 16 2006
OFFICE OF THE CLERK

IN THE

Supreme Court of the United States

KSR INTERNATIONAL CO.,

Petitioner,

—against—

TELEFLEX INC. and
TECHNOLOGY HOLDING CO.,

Respondents.

ON WRIT OF CERTIORARI TO THE UNITED STATES COURT OF APPEALS FOR THE FEDERAL CIRCUIT

REPLY BRIEF FOR PETITIONER

JAMES W. DABNEY
Counsel of Record
1 New York Plaza
New York, New York 10004
(212) 859-8000

STEPHEN S. RABINOWITZ
HENRY C. LEBOWITZ
MITCHELL E. EPNER
DARCY M. GODDARD
FRIED, FRANK, HARRIS,
SHRIVER & JACOBSON LLP
New York, New York 10004

Attorneys for Petitioner

JOHN F. DUFFY
FRIED, FRANK, HARRIS,
SHRIVER & JACOBSON LLP
Washington, DC 20004
Of Counsel

November 16, 2006

TABLE OF CONTENTS

Page(s)

TABLE OF AUTHORITIES ii

I. THE PROPER REFERENT FOR ANALYSIS IS CLAIM 4 OF THE ENGELGAU PATENT, WHICH DESCRIBES AN ASANO PEDAL COMBINED WITH AN OFF-THE-SHELF ELECTRONIC PEDAL POSITION SENSOR. 4

II. CLAIM 4 OF THE ENGELGAU PATENT IS INVALID AS A MATTER OF LAW 9

A. "Non-Obviousness" Under Section 103(a) Is a Function of Skill and Ingenuity, Not Absence of "Motivation" 12

B. Invalidity Under Section 103(a) May Be Proven by a Preponderance of the Evidence 18

CONCLUSION 20

TABLE OF AUTHORITIES

CASES

Page(s)

Anderson's-Black Rock, Inc. v. Pavement Salvage Co., 396 U.S. 57 (1969) ..... *passim*

Aro Manufacturing Co. v. Convertible Top Replacement Co., 365 U.S. 336 (1961) 4

Chevron, U.S.A., Inc. v. Natural Resources Defense Council, 467 U.S. 837 (1984) 3

Dann v. Johnston, 425 U.S. 219 (1976) 8 n.5, 12

Dickstein v. Seventy Corp., 522 F.2d 1294 (6th Cir. 1975) 19

Dystar Textilfarben, GmbH v. C.H. Patrick Co., 464 F.3d 1356 (Fed. Cir. 2006) 11 n.8

Essex Razor Blade Corp. v. Gillette Safety Razor Co., 299 U.S. 94 (1936) 13 n.10

Goodyear Tire & Rubber Co. v. Ray-O-Vac Co., 321 U.S. 275 (1944) 13 n.10, 17

Graham v. John Deere Co., 383 U.S. 1 (1966) ..... *passim*

Graver Tank & Manufacturing Co. v. Linde Air Products Co., 336 U.S. 271 (1949) 4, 5

Grogan v. Garner, 498 U.S. 279 (1991) 20

Page(s)

Herman & MacLean v. Huddleston,
459 U.S. 375 (1983).....20

Hotchkiss v. Greenwood,
52 U.S. (11 How.) 248 (1851).....*passim*

KP Permanent Make-Up, Inc. v. Lasting Impression I, Inc., 543 U.S. 111 (2004).....20

Lincoln Engineering Co. v. Stewart-Warner Corp.,
303 U.S. 545 (1938).....9

Markman v. Westview Instruments, Inc.,
517 U.S. 370 (1996).....4

Radio Corp. of America v. Radio Engineering Laboratories, Inc., 293 U.S. 1 (1934).....19

Rains v. Niaqua, Inc.,
406 F.2d 275 (2d Cir. 1969).....19

Sakraida v. Ag Pro, Inc.,
425 U.S. 273 (1976).....*passim*

Sinclair & Carroll Co. v. Interchemical Corp.,
325 U.S. 327 (1945).....13 n.10

South Corp. v. United States,
690 F.2d 1368 (Fed. Cir. 1982).....14 n.13

St. Germain v. Brunswick,
135 U.S. 227 (1890).....18

Stratoflex, Inc. v. Aeroquip Corp.,
713 F.2d 1530 (Fed. Cir. 1983).....15

Page(s)

United States v. Adams,
383 U.S. 39 (1966) 13 n.10

FEDERAL STATUTES

35 U.S.C. § 100(a) 10 n.7

35 U.S.C. § 101 ..... 10 & 10 n.7

35 U.S.C. § 103(a) ..... *passim*

35 U.S.C. § 115 ..... 10 n.7, 11

35 U.S.C. § 154(a)(1) 4 n.3

35 U.S.C. § 273(b)(4) 20

35 U.S.C. § 282 ..... *passim*

FEDERAL RULES

Fed. R. Civ. P. 56(c) 9, 18

Fed. R. Civ. P. 56(e) 8, 9

SECONDARY AUTHORITY

Martin J. Adelman, Randall R. Rader, John R. Thomas & Harold C. Wegner, CASES AND MATERIALS ON PATENT LAW (2d ed. 2003) 2, 15

Brief of E. Ernest Goldstein as Amicus Curiae, *Graham v. John Deere Co.*, 383 U.S. 1 (1966) 13 n.11

Page(s)

William M. Landes & Richard A. Posner,
THE ECONOMIC STRUCTURE OF INTELLECTUAL PROPERTY LAW 338 (Harvard 2003).....15, n.14

U.S. Federal Trade Commission,
To Promote Innovation: The Proper Balance of Competition and Patent Law and Policy (2003)..... 19-20

After misstating the Question Presented, the Respondents (i) misstate the District Court's holding, (ii) misstate the factual record of this case, (iii) misstate the arguments of the Solicitor General, (iv) misstate this Court's test of the validity of combination patents, and (v) misstate the judgment relief that can and should be granted to Petitioner in this case. Each of these five points deserves brief initial attention.

First, contrary to Respondents' assertion, it is not true that "the district court held *the patent* invalid." Resp. Br. at 1 (emphasis added). As Petitioner has emphasized (Pet. Br. at 9 & n.8), the District Court held only that *claim 4* of the Engelgau patent is invalid. Reversal of the judgment below would leave intact unasserted claims 1-3 of the Engelgau patent, which describe the alleged invention more specifically than does claim 4.

Second, Respondents' statement of the case is filled with non-record references to "design challenges" that supposedly were faced by Mr. Engelgau. Resp. Br. at 3-4. Besides being improperly presented here for the first time,[1] these non-record references are wholly irrelevant to the validity of claim 4 of the Engelgau patent, whose broad language is in no way limited to adjustable pedal assemblies that provide for any particular "feel," that meet any particular "tolerance," or that fit into any particular vehicle whose "footwell space" is "unusually restricted." *Id.*

Third, the Solicitor General and the PTO have told this Court that claim 4 of the Engelgau patent is invalid and should never have been allowed by the PTO, based on exactly the same theory and combination of references that Petitioner has relied on in this case from the beginning. *See* SG Br. at 27-29 & n.15 ("Petitioner has supplied an animation that helpfully illustrates that point."). A copy of the animation cited in the Solicitor General's Brief is attached as Appendix A to this Reply Brief. Respondents' assertion that the

---

[1] The Solicitor General supported a grant of *certiorari* in this case in part because Respondents' opposition to summary judgment "did not dispute the core factual record relevant to this Court's review of the court of appeals' test." SG Br. at 19 (Petition Stage, filed May 2006).

Solicitor General has purportedly advanced some "new theory of obviousness" (Resp. Br. at 13, 48, 50) is simply wrong.

Fourth, Respondents misstate and mischaracterize Petitioner's position as supposedly advocating "a very restrictive 'synergy' standard." Resp. Br. at 12. In fact, throughout this litigation, Petitioner has cited and relied on this Court's "test of the validity of combination patents." *Sakraida v. Ag Pro, Inc.*, 425 U.S. 273, 282 (1976) (quoting *Anderson's-Black Rock, Inc. v. Pavement Salvage Co.*, 396 U.S. 57, 60 (1969)). *See, e.g.*, Pet. Br. at 43. That "test," sometimes referred to as an "aggregation" rule, is grounded in numerous precedents of this Court spanning more than a century. *See* Pet. Br. at 4-5, 20-23 & n.17. In *Anderson's-Black Rock*, the very question presented was whether "the holding on the matter of aggregations in patents in *Lincoln Engineering Co. v. Stewart-Warner Corp.*, 303 U.S. 545, is still the law."[2] The answer was an emphatic "yes." *See Anderson's-Black Rock*, 396 U.S. at 60-61. Prior to the grant of *certiorari* in this case, it was widely recognized that the Federal Circuit, "[i]n its early decisions, essentially repudiated the holdings of *Anderson's-Black Rock* and *Sakraida*." Martin J. Adelman, et al., CASES & MATERIALS ON PATENT LAW 345 (2d ed. 2003). (This leading patent law casebook is co-authored by Judge Randall R. Rader who currently sits on the Federal Circuit.) Even now Respondents do not attempt to defend the validity of claim 4 of the Engelgau patent under this Court's "test of the validity of combination patents," *Sakraida*, 425 U.S. at 282 (quoting *Anderson's-Black Rock*, 396 U.S. at 60), presumably because the claim is so clearly invalid under that test.

Fifth, Respondents falsely state that Petitioner supposedly "has chosen not to challenge the court of appeals' evaluation of the summary judgment record in this case." Resp. Br. at 46. In fact, Petitioner's opening brief to this Court expressly argued that "[u]nder this Court's precedents, the District Court's award of summary judgment was clearly correct" (Pet. Br. at 16-17), and that the contrary judgment of the Federal Circuit below "should be

---

[2] Petition for a Writ of Certiorari to the United States Court of Appeals for the Fourth Circuit in Case No. 45 (filed Feb. 4, 1969) at 2.

reversed." (*Id.* at 17, 50.) Further, this Court "reviews judgments, not opinions." *Chevron, U.S.A., Inc. v. Natural Res. Def. Council*, 467 U.S. 837, 842 (1984). Under first principles of appellate procedure, to decide this case, the Court "*must* determine whether the Court of Appeals' legal error resulted in an erroneous judgment." *Id.* (emphasis added). This point is plainly reflected throughout Petitioner's briefs, beginning with the very first sentence in the Petition for Certiorari, which requested a "writ of certiorari to review *the judgment* of [the Court of Appeals] entered in this action." Pet. for Cert. at 1 (emphasis added).

It should not escape the Court's attention what the Respondents are trying to do in this Court. By filling their Brief with non-record references and attempting, for the first time, to question a detail of Petitioner's animation evidence that was totally undisputed below, Respondents seek to avoid application of this Court's long-standing precedents to the existing record, which would inevitably lead to outright reversal of the Federal Circuit's judgment and reinstatement of the District Court's grant of summary judgment. If the outcome of this case were a remand, even a remand with a disapproval of the reasoning of the decision below, the message to business would be clear: even where the Solicitor General and PTO have explicitly told this Court, in a 4-year-old litigation, that a patent claim is invalid and was issued in error, a patentee can still prevent summary adjudication of the ultimate legal question of patent validity. Such a result would signal that the process for determining the validity of patent claims in the United States is as highly unpredictable, expensive, and uncertain as ever, and that the holder of even the most dubious of patent claims can effectively threaten to inflict the cost of many years of expensive litigation with uncertain prospects.

As important as are legal tests for determining ultimate questions of patent validity, the *holdings* of this Court *applying* substantive patent legal standards are of even greater importance to litigants and other participants in the U.S. patent system. Precedents and analogies in patent law are as important as in any other area of the law. A holding that particular claimed subject matter does not constitute "non-obvious subject matter" under § 103 gives meaning to the statutory concept in a way that no mere verbal formula can.

"[T]he ultimate question of patent validity is one of law." *Graham v. John Deere Co.*, 383 U.S. 1, 17 (1966). Where, as in this case, a defense of invalidity under § 103(a) rests on an established set of historical facts, specifically, (i) admitted prior art whose contents are undisputed (Pet. Br. at 12), (ii) a stipulated level of skill in the pertinent art (*id.*), and (iii) an undisputed, given quantum of difference between an asserted patent claim and undisputed prior art of record (*id.* at 12-13), a court can and should decide the ultimate question of patent validity as a matter of law, as the District Court did here, and as this Court has done on numerous prior occasions. *See* Pet. Br. at 2-3 & n.1, 4-5 & n.4, 17-27 & nn.14-18, 39 & nn.30-31.

On the record of this case, claim 4 of the Engelgau patent is clearly invalid under § 103(a); the Solicitor General and PTO are both correct in so advising this Court (SG Br. at 27-30); and this Court should so hold as a matter of law. The judgment of the Federal Circuit should be reversed.

Part I below addresses Respondents' various indirections and misstatements of the record. Part II discusses the proper legal analysis.

I. THE PROPER REFERENT FOR ANALYSIS IS CLAIM 4 OF THE ENGELGAU PATENT, WHICH DESCRIBES AN ASANO PEDAL COMBINED WITH AN OFF-THE-SHELF ELECTRONIC PEDAL POSITION SENSOR.

Section 103(a) calls for analysis of "the differences between *the subject matter sought to be patented* and the prior art." (Emphasis added.) This Court has "frequently held that it is the claim which measures the grant to the patentee." *Graver Tank & Mfg. Co. v. Linde Air Prods. Co.*, 336 U.S. 271, 277 (1949)[3]; *accord Markman v. Westview Instruments, Inc.*, 517 U.S. 370, 373 (1996) ("The claim 'define[s] the scope of a patent grant.'") (quoting 3 E. Lipscomb, *Walker on Patents* § 11:1, at 280 (3d ed. 1985)); *Aro*

---

[3] The word "grant" is a term of art in patent law, and refers to the "grant to the patentee" provided for by 35 U.S.C. § 154(a)(1).

Mfg. Co. v. Convertible Top Replacement Co., 365 U.S. 336, 339 (1961) ("[T]he claims made in the patent are the sole measure of the grant.").

"While the cases more often have dealt with efforts to resort to specifications to expand claims, it is clear that the latter fail equally to perform their function as a measure of the grant when they overclaim the invention." *Graver*, 336 U.S. at 277. "When they do so to the point of invalidity and are free from ambiguity which might justify resort to the specifications, . . . they are not to be saved because the latter are less inclusive." *Id.*

Throughout this litigation, Respondents have contended that claim 4 of the Engelgau patent encompasses any and every vehicle control pedal apparatus that falls within the "ordinary and customary meaning" of the claim's words. (C.A. App. 504.) For purposes of Petitioner's motion for summary judgment of invalidity, both lower courts accepted and applied Respondents' own characterization of the scope of claim 4 of the Engelgau patent. (Pet. App. 9a; Pet. App. 38a.)

The referent for validity analysis in this case is thus not "the patent" (Resp. Br. at 1), or the "[t]wo illustrations of Engelgau" cited by Respondents (*id.* at 5), or "the design feature of Engelgau" (*id.* at 7), or "the Engelgau invention" (*id.* at 44), as erroneously asserted by Respondents. Rather, for purposes of § 103(a), "the subject matter sought to be patented" is *all* of the subject matter that falls within "the plain, ordinary, and undisputed language of claim 4" of the Engelgau patent (Pet. App. 38a). *Cf. Graver*, 336 U.S. at 276-77 (reversing and holding patent claims invalid, where claims "were too broad and comprehended more than the invention").

Unlike the "illustrations of Engelgau" cited by Respondents (Resp. Br. at 5), claim 4 of the Engelgau patent describes the alleged invention in only the most general and abstract of terms. The claim recites: (i) "a support (18) adapted to be mounted to a vehicle structure (20)"; (ii) "an adjustable pedal assembly (22) having a pedal arm (14) moveable in fore and aft directions with respect to said support (18)"; (iii) "a pivot (24) for pivotally supporting said adjustable pedal assembly (22)"; and (iv) "an electronic control (28)

attached to said support (18) for controlling a vehicle system." (JSA8 at col. 6, lines 18-28.)

The Engelgau patent explicitly states that the recited "adjustable pedal assembly 22" may "be *any* of *various* adjustable pedal assemblies known in the art" (Pet. Br. at 9; JSA6, col. 2, lines 55-56; emphasis added). The Engelgau patent further states that the recited "electronic control (28)" can be "*any* of *various* electronic throttle control mechanisms known in the art" (Pet. Br. at 9; JSA6 col. 3, lines 22-24; emphasis added).

In other words, as both lower courts held, claim 4 of the Engelgau patent is so broadly and abstractly worded as to describe (i) the exact type of "adjustable pedal assembly" that is disclosed in Figure 5 of U.S. Patent No. 5,010,782 to Asano entitled "Position Adjustable Pedal Assembly" ("Asano"; *see* JSA219-232),[4] combined with (ii) an off-the-shelf, modular electronic pedal position sensor (JA88a-90a at ¶¶ 12-19; JSA63-71), including a CTS 503 Series sensor that was specifically designed (a) to engage the rotating pivot shaft of any gas pedal (JA87a, 90a at ¶¶ 10, 19), and (b) to be mounted to whatever support structure carried the gas pedal pivot shaft (JA88a at ¶¶ 12-13; JA89a-91a at ¶¶ 15-21).

Respondents' opposition to summary judgment did not controvert Petitioner's affidavit evidence, given by a witness having extensive experience in the field of automotive pedal design (JA85a-86a), that "[c]onventional, off-the-shelf position sensors that were on sale in the United States as of November 20, 1996 . . . could have been fitted to the pivot (54) and support bracket (50) disclosed in Figure 5 of the Asano '782 Patent without materially altering the '782 Patent pedal, in exactly the same way as the position sensor incorporated in the 1994 GM ETC Pedal is attached to the pivot shaft and support bracket in that pedal assembly" (JA96a ¶ 36).

---

[4] *See* Pet. App. 9a (Asano "disclosed all of the structural limitations of claim 4 with the exception of the electronic control"); Pet. App. 40a ("[T]he Court finds that Asano teaches every limitation contained in claim 4, with the exception of the limitation referring to an electronic pedal position sensor.").

Respondents also did not—and even now do not—dispute that long prior to the date when Mr. Engelgau made his alleged invention (Pet. Br. at 8), it was a "standard technique" to couple a pedal position sensor to a rotatable pedal pivot shaft (JA91a ¶ 21). During the prosecution of the Engelgau patent, the PTO took the position that the idea of attaching a pedal position sensor to the support bracket of an accelerator pedal was "old and well known in the art" and could not be a basis for patenting an adjustable pedal assembly (JSA131, *quoted in* Pet. App. 45a). Respondents acquiesced in the PTO's position. Pet. App. 45a.

In support of its motion for summary judgment, Petitioner submitted two expert declarations (JA84a-99a, JA101a-114a) and computer animation evidence (JA97a ¶ 41, JA103a-104a ¶¶ 4-6, JSA81; *see* Appendix A hereto) demonstrating how claim 4 of the Engelgau patent was so broadly and abstractly worded as to describe subject matter that was technologically trivial: an Asano pedal adapted to work in a modern vehicle having an electronic throttle control, the adaptation consisting of attaching a CTS 503 Series pedal position sensor to an Asano pedal support bracket and coupling the sensor to a slightly lengthened Asano pedal pivot 54 (shown in green in Appendix A), in exactly the same way as such a sensor had been attached to a 1994 GM ETC pedal support bracket and coupled with that pedal's pivot. The accuracy of Petitioner's experts' description of the combination of an Asano pedal and a CTS 503 Series pedal position sensor, including as depicted in the computer animation, was not disputed by Respondents in either of the lower courts.

Represented by new counsel in this Court, Respondents assert for the first time that the modified Asano pedal depicted in Petitioner's animation "cannot work" because the "pivot 54" disclosed in Figure 5 of the Asano patent supposedly "does not rotate with depression of the pedal" and so, supposedly, "cannot be used to actuate" the depicted electronic control. Resp. Br. 6 at n.5, 48-49 n.17. Respondents' new argument is procedurally defaulted, without support in the record, and wrong.

Procedurally, if Respondents had wished to contend in the District Court that the "pivot 54" disclosed in the Asano patent had to be a non-rotatable, "stationary structure" (Resp. Br. at 48-49

n.17), Respondents could have avoided summary judgment on that basis only by means of an evidentiary submission that met the standard of Federal Rule of Civil Procedure 56(e). They did not do so. Not one of the three declarations submitted by Respondents in opposition to summary judgment (JSA141-143, JSA204-207, JSA208-210) so much as mentioned the "pivot 54" disclosed in the Asano patent. Still less did Respondents' opposition to summary judgment include evidence that a person "with an undergraduate degree in mechanical engineering or an equivalent amount of industry experience who has familiarity with pedal control systems for vehicles" (Pet. App. 36a)[5] would have interpreted the Asano patent disclosure as requiring that the disclosed "pivot 54" be a non-rotatable, "stationary structure" (Resp. Br. at 49 n.17). The absence of such evidence is hardly surprising, since on its face, the Asano patent broadly characterizes the disclosed adjustable pedal assembly as comprising "a lever" (e.g., lever 52) that is connected to "a stationary bracket" (e.g., bracket 50) for "pivotal movement relative to said stationary bracket about a first pivot *axis*" (e.g., the axis of pivot 54; *see* JSA231 at col. 9, lines 55-57; emphasis added). A pivot shaft can of course rotate about its own axis.

Similarly unsupported are Respondents' assertions, made for the first time in this Court, that the Asano "Pivot 54" purportedly "suffers" in some unexplained way from a "constant ratio problem" (Resp. Br. at 49), so that deploying a pedal position sensor as depicted in Appendix A hereto would somehow result in "distorted" "information" being "transmitted through that pivot" (*id.* at 48-49). Besides lacking a shred of record support and being improperly raised for the first time in this Court, these pseudo-expert assertions do not even make sense. The Federal Circuit noted that "constant ratio" is a concept related to "the force required to depress the pedal" (Pet. App. 13a n.3), not anything associated with information

---

[5] "In making the determination of 'obviousness,' it is important to remember that the criterion is measured not in terms of what would be obvious to a layman, but rather what would be obvious to one 'reasonably skilled in [the applicable] art.'" *Dann v. Johnston*, 425 U.S. 219, 229 (1976) (quoting *Graham v. John Deere Co.*, 383 U.S. 1, 37 (1966)).

conveyed by depressing a pedal. Respondents' bare assertion to the contrary, made for the first time in a Brief to this Court, is simply no basis on which summary judgment can properly be withheld or delayed in this 4-year-old case. *See* Fed. R. Civ. P. 56(c), (e).

II. CLAIM 4 OF THE ENGELGAU PATENT IS INVALID AS A MATTER OF LAW.

As the Solicitor General and the PTO have both correctly stated, claim 4 of the Engelgau patent is so broadly worded as to describe "nothing more than a combination of previously known components that 'simply arranges old elements with each performing the same function that it had been known to perform.'" SG Br. at 28 (quoting *Sakraida v. Ag Pro, Inc.*, 425 U.S. 273, 282 (1976)). Under a long and unbroken line of this Court's precedents (*see* Pet. Br. at 20-23 & n.17), such a combination inherently lacks "that degree of skill and ingenuity which constitute essential elements of every invention." *Sakraida*, 425 U.S. at 279 (quoting *Hotchkiss v. Greenwood*, 52 U.S. (11 How.) 248, 267 (1851)). *See also Anderson's-Black Rock, Inc. v. Pavement Salvage Co.*, 396 U.S. 57, 63 (1969) ("more than that is needed for invention").

The long-established "test of the validity of combination patents," *Sakraida*, 425 U.S. at 282 (quoting *Anderson's-Black Rock*, 396 U.S. at 60), has been applied by this Court to determine the validity of patent claims in numerous cases (*see* Pet. Br. at 4-5 & n.4, 20-23 & n.17), and also prevails in Europe (*id.* at 50 n.38). The test embodies a practical judgment, grounded in extensive experience, that as a matter of law, the statutory "person having ordinary skill in the art" (35 U.S.C. § 103(a)) is deemed capable of assembling or rearranging "old elements with each performing the same function it had been known to perform," *Sakraida*, 425 U.S. at 282, and knows what a "mere aggregation" of pre-existing components will comprise, *Lincoln Eng'g Co. v. Stewart-Warner Corp.*, 303 U.S. 545, 549 (1938).

Respondents presented no evidence below, and even now make no argument, that as of the claimed invention date of February 14, 1998, adapting an Asano pedal to actuate an electronic throttle control, as illustrated in Appendix A hereto, was a problem whose solution would have required more than "ordinary skill in the art."

35 U.S.C. § 103(a). Instead, Respondents contend that claim 4 of the Engelgau patent may define a patentable "invention" *no matter how little skill* might have been required to make subject matter falling within the terms of that claim.

The key to understanding Respondents' argument is the radical, unstated premise on which it is based: that § 103 purportedly does not state a "condition for patentability" that a patent *applicant* must satisfy before a patent can properly be *granted*, but rather purportedly states a condition for *challenges* to patentability that the PTO or an accused infringer must satisfy before a claim to patent protection can properly be *denied*. *See* Pet. Br. at 17, 40-42. This upside down view of § 103(a) is openly acknowledged in the Brief of the American Intellectual Property Law Association (AIPLA), which the Respondents describe as "a professional organization with a genuine interest in the application of a balanced standard." Resp. Br. at 10.[6] AIPLA asserts that Sections 101 and 102 of the Patent Act purportedly "*presume entitlement* to a patent" and, purportedly, "Section 103 functions only to limit this *entitlement*." AIPLA Br. at 7 n.10 (emphasis added). Under this view of § 103(a), a patent applicant is supposedly *entitled* to patent *any* claimed "invention" that is "new and useful" (35 U.S.C. § 101) and "is not identically disclosed or described as set forth in section 102" (35 U.S.C. § 103(a)), unless the PTO or an accused infringer can satisfy the Federal Circuit teaching-suggestion-motivation test.[7]

---

[6] It is by no means clear why patent bar groups would have a systematic interest in a "balanced" standard of patentability, in view of the enormous fees that litigation of invalid patent claims can generate. *See* Pet Br. at 35 & n.25.

[7] In fact, contrary to Respondents' and its amici's suggestion, patent protection in the United States is limited by statute to subject matter that constitutes an "invention or discovery," 35 U.S.C. § 100(a); a patent applicant must swear to a belief that he or she is an "inventor," *id.* § 115; and the PTO must examine any "alleged new invention" (*id.* § 131) to determine if it meets "the conditions and requirements of this title," *id.* § 101, one of which is "the § 103 condition." *Graham*, 383 U.S. at 17.

The so-called "teaching-suggestion-motivation test" (Pet. App. 8a) is predicated upon, and enforces, the "entitlement" interpretation of § 103(a) that the Federal Circuit adopted shortly after its creation in 1982. *See* Pet. Br. at 28-29. As a "test" of whether the PTO or a court can properly *deny* a supposed "entitlement" to patent protection, the so-called "teaching-suggestion-motivation test" purports to force the issuance and upholding of patent claims based on an applicant's subjective statement of belief that he or she was "the original and first inventor of the process, machine, manufacture, or composition of matter, or improvement thereof, for which he [or she] solicits a patent," 35 U.S.C. § 115, no matter how uninformed or baseless such a stated subjective belief might be.[8]

---

[8] Respondents' and their amici's characterization of Federal Circuit precedent as providing an "objective" standard for evaluating patent validity (Resp. Br. at 39) is wildly inaccurate. First, as noted above, the "teaching-suggestion-motivation test" presupposes that an applicant's purely subjective, uninformed belief is sufficient to establish that claimed subject matter constitutes "non-obvious subject matter." 35 U.S.C. § 103(a). Only challenges to the validity of patent claims are made subject to the so-called "objective rules" cited by Respondents (Resp. Br. at 39). Second, as described *infra*, the "teaching-suggestion-motivation test" presupposes that a patent applicant's purely subjective perception of the "problem" that he or she faced when making an alleged invention purportedly operates to limit a court's authority to declare patent claims invalid under § 103(a). Third, the "teaching-suggestion-motivation test" purports to strip courts of their traditional role in determining "the ultimate question of patent validity," *Graham*, 383 U.S. at 17, and to convert that legal question into a purported "fact" question for determination by lay juries. *See* Pet. Br. at 5-6, 34-38. Finally, since *certiorari* was granted in this case, the Federal Circuit has taken to saying that "[o]ur suggestion test is in actuality quite flexible," *Dystar Textilfarben, GmbH v. C.H. Patrick Co.*, 464 F.3d 1356, 1357 (Fed. Cir. 2006), and "implicit motivation to combine" may exist in numerous and diverse "situations," *id.* at 1368. It would be difficult to imagine a "fact" less susceptible to "objective" determination than the outcome of a swearing contest among experts over the existence or non-existence of "implicit" "motivations" that a hypothetical person might have had in the context of a fictional contrived, subjectively defined problem-solving exercise.

Hence in this case, Respondents argue that claim 4 of the Engelgau patent supposedly *cannot* be held invalid under § 103(a), no matter how trivial might be the differences between the prior art and the subject matter described by claim 4 of the Engelgau patent, unless Petitioner can satisfy the Federal Circuit "teaching-suggestion-motivation test" (Pet. App. 8a) with respect to the subjectively defined "problem" that Mr. Engelgau identified in his patent application (Pet. App. 4a, 12a-13a). Respondents' argument to this Court well illustrates how the Federal Circuit "motivation" inquiry stands in irreconcilable conflict with the objective, skill-based analysis of claimed subject matter that § 103(a) and this Court's precedents require.

A. "Non-Obviousness" Under Section 103(a) Is a Function of Skill and Ingenuity, Not Absence of "Motivation"

The statutory concept of "non-obvious subject matter" refers to subject matter that exhibits "that degree of skill and ingenuity which constitute essential elements of every invention." *Sakraida v. Ag Pro, Inc.*, 425 U.S. 273, 279 (1976) (quoting *Hotchkiss v. Greenwood*, 52 U.S. (11 How.) 248, 267 (1851)). *See also Dann v. Johnston*, 425 U.S. 219, 225 (1976) ("As a judicial test, 'invention' —*i.e.*, 'an exercise of the inventive faculty,' *McClain v. Ortmayer*, 141 U.S. 419, 427 (1891)—has long been regarded as an absolute prerequisite to patentability"); *Anderson's-Black Rock, Inc. v. Pavement Salvage Co.*, 396 U.S. 57, 63 (1969) ("more than that is needed for invention"). The degree of *skill* needed to solve an *objectively defined problem*,[9] not the absence of *motivation* to make

---

[9] The relevant "problem" for purposes of validity analysis under § 103(a) is defined objectively by reference to "the prior art" and "the subject matter sought to be patented," not by reference to the "problem" a given applicant might have subjectively perceived that he or she faced at the time an alleged invention was made. A patent applicant may not be aware of the closest prior art, or may describe an alleged invention using claim words that are so broad as to leave little or no difference between the claimed subject matter and the prior art.

particular claimed subject matter, has been the benchmark of patent validity analysis in this Court for more than 150 years.[10]

Contrary to Respondents' suggestion, the legal standard set forth in *Hotchkiss* was not "rejected" (Resp. Br. at 33), but to the contrary was *codified* by § 103. *Graham*, 383 U.S. at 17. *See* Pet. Br. at 3. Respondents' and their amici's heavy reliance on a practitioner article written by the late Federal Circuit Judge Rich (Resp. Br. at 16, 32, 33, 41), in which the author argues that § 103(a) purportedly abrogated the entire body of this Court's pre-1952 precedents applying *Hotchkiss*, is very misplaced: the radical views expressed in that article were presented to this Court in *Graham*,[11] and were emphatically *rejected* by this Court in *Graham*. 383 U.S. at 16-19.

---

[10] *E.g.*, *Graham v. John Deere Co.*, 383 U.S. 1, 24-25 (1966) (in view of prior art, ordinarily skilled person would have immediately seen claimed subject matter as means of achieving desired "free-flexing" objective; patent claims held invalid); *United States v. Adams*, 383 U.S. 39, 42-52 (1966) (in view of prior art, ordinarily skilled person would not have seen claimed subject matter as means of achieving desired water-activated constant-voltage battery; patent claims held valid); *Sinclair & Carroll Co. v. Interchemical Corp.*, 325 U.S. 327, 333-35 (1945) (in view of prior art, ordinarily skilled person would have been capable of devising claimed ink composition as means of achieving desired drying properties; patent claims held invalid); *Goodyear Tire & Rubber Co. v. Ray-O-Vac Co.*, 321 U.S. 275, 279 (1944) (in view of prior art and secondary considerations, ordinarily skilled person would not have seen claimed subject matter as means of achieving desired leak proof battery; patent claims held valid); *Essex Razor Blade Corp. v. Gillette Safety Razor Co.*, 299 U.S. 94, 98 (1936) (in view of prior art, claimed non-circular opening in razor blade was a "choice . . . between alternative means obvious to any mechanic"; patent claims held invalid).

[11] Appendix A to the Brief Amicus Curiae of E. Ernest Goldstein, *Graham v. John Deere Co.*, 383 U.S. 1 (1966), was a copy of a speech by the late Judge Rich entitled "The Vague Concept of 'Invention' as Replaced by Sec. 103 of the 1952 Patent Act." On page 17a of that Appendix, Judge Rich criticized lawyers who had "persuaded a number of courts that it [§ 103] made no change whatever but was 'mere codification.'" That was,

In *Graham* itself and in all of this Court's post-*Graham* decisions, the Court has cited and applied *Hotchkiss* and other pre-codification precedents (Pet. Br. at 20 n.16), and has reiterated that the "standard" of the *Hotchkiss* case "was enacted in 1952 . . . in 35 U.S.C. § 103." *Sakraida*, 425 U.S. at 279. Any possible doubt as to the continuing vitality, post-codification, of the test of validity of combination patents was resolved in *Anderson's-Black Rock*, wherein this Court granted *certiorari* for the very purpose of deciding whether "the holding on the matter of aggregations in patents in *Lincoln Engineering Co. v. Stewart-Warner Corp.*, 303 U.S. 545, is still the law."[12] The answer was "yes." *Anderson's-Black Rock*, 396 U.S. at 60-61.

Respondents acknowledge (Resp. Br. at 14) that the so-called "teaching-suggestion-motivation test" originates not in any decision of this Court, but in decisions of the former Court of Customs and Patent Appeals ("CCPA") that long antedated this Court's *Graham* decision. Back when PTO decisions were subject to review by the CCPA, this Court "observed a notorious difference between the standards applied by the Patent Office and by the courts." *Graham*, 383 U.S. at 18. Yet as one of its first official acts in 1982, the Federal Circuit bound itself to follow the entire body of CCPA case law[13] and repudiated this Court's precedents applying "the test of

---

(..continued)

however, exactly how this court interpreted § 103 in *Graham*. *See* 383 U.S. at 17 ("[T]he section was intended merely as a codification of judicial precedents embracing the *Hotchkiss* condition."). *Graham*'s holding that § 103 did not change "the general level of innovation necessary to sustain patentability," *Graham*, 383 U.S. at 4, but merely codified "judicial precedents embracing the *Hotchkiss* condition," *id.* at 17, was a view shared by the overwhelming majority of the Courts of Appeals at the time. *See* Efforts to Establish a Statutory Standard of Invention, Study No. 7, Subcommittee on Patents, Trademarks, and Copyrights, 85th Cong., 1st Sess. (Committee Print, 1958), *cited in Graham*, 383 U.S. at 17 n.9.

[12] Petition for a Writ of Certiorari to the United States Court of Appeals for the Fourth Circuit in Case No. 45 (filed Feb. 4, 1969) at 2.

[13] *South Corp. v. United States*, 690 F.2d 1368, 1369 (Fed. Cir. 1982) (en banc) ("[T]he holdings of our predecessor courts, the United States Court

validity of combination patents." *Sakraida*, 425 U.S. at 282 (quoting *Anderson's-Black Rock*, 396 U.S. at 60). *See Stratoflex, Inc. v. Aeroquip Corp.*, 713 F.2d 1530, 1539 (Fed. Cir. 1983) ("Reference to 'combination' patents is, moreover, *meaningless*.") (emphasis added). *See also* Pet. Br. at 5, 27-28. Notably, the *Stratoflex* panel cited the very same practitioner article by the late Judge Rich on which Respondents and their amici rely so heavily in this case. 713 F.2d at 1539 n.6.

The first years of the Federal Circuit coincided with a spectacular increase in the percentage of patents held valid in federal court litigation[14] as the Federal Circuit, "[i]n its early decisions, essentially repudiated the holdings of *Anderson's-Black Rock* and *Sakraida*." Martin J. Adelman, et al., CASES & MATERIALS ON PATENT LAW 345 (2d ed. 2003). Contrary to Respondents' suggestion (Resp. Br. at 14-15), no well-counseled

---

(..continued)

of Claims and the United States Court of Customs and Patent Appeals, announced by those courts before the close of business September 30, 1982, shall be binding as precedent in this court").

[14] *See* William M. Landes & Richard A. Posner, THE ECONOMIC STRUCTURE OF INTELLECTUAL PROPERTY LAW 338 (Harvard 2003) (noting that, "in the first five years of the new court the percentage of cases in which the validity of a challenged patent was upheld increased enormously over the pre-Federal Circuit era," going from 35 percent to "a weighted average of 67 percent for the first ten years of the Federal Circuit"). Respondents' citation of purported statistics concerning recent Federal Circuit outcomes (Resp. Br. at 29-30, 43) is wholly non-probative. It is well known that in a static legal context, litigated outcomes will tend toward a 50 percent success rate as litigants choose to bring, settle, or not bring cases with knowledge of the legal standards that will probably be applied. *See* G. Priest & B. Klein, *The Selection of Disputes for Litigation*, 13 J. Legal Stud. 1 (1984). Where statistical success rates deviate from the 50 percent benchmark, the deviation is probative of differential incentives to litigate but does not necessarily convey any information about the stringency of the law. Thus, for example, federal prosecutors' traditionally high rates of success do not necessarily indicate that the law is biased against criminal defendants.

participant in the United States patent system could reasonably rely on one lower court's inappropriate and widely recognized rejection of this Court's precedents. *See* Pet Br. at 30-32 (citing authorities).

Further, as the present case exemplifies, patents typically include multiple claims characterizing disclosed subject matter with varying degrees of specificity. The invalidity of a claim that leaves too little difference between its scope and prior art has no necessary impact on the validity of other, narrower claims made in the same patent. *See* 35 U.S.C. § 282. Respondents' suggestion that reaffirmation of this Court's patent precedents would be "*exceptionally* disruptive" (Resp. Br. at 14; emphasis in original), and even "earth-shattering" (*id.* at 15), is belied by the facts of this very case: reversal of the Federal Circuit's judgment in this case would leave intact three of the four claims made in the Engelgau patent plus the additional eighteen (18) claims that Respondents made in the "parent" of the Engelgau patent, U.S. Patent No. 6,109,241 (*see* JSA1, line 63), each of which claims describes the same alleged "invention" with varying degrees of specificity.

The facts of this case also expose the deeply flawed nature of the "teaching-suggestion-motivation test." Respondents concede (Resp. Br. at 2) that the Asano patent is part of "the prior art" (35 U.S.C. § 103(a)) to the Engelgau patent. Yet in the next breath, Respondents contend that in order to base an invalidity challenge on the Asano patent, Petitioner supposedly had to present "clear and convincing evidence" (Pet. App. 5a, 14a n.4) that a hypothetical "person having ordinary skill in the art" (35 U.S.C. § 103(a)), "faced with the problem confronted by Engelgau" (Resp. Br. at 45-46 n.15), "would have *selected* the Asano pedal from the prior art" (Resp. Br. at 8; emphasis added) and thus "would have *wanted to* place an electronic throttle control on the support structure of the Asano device" (*id.* at 45; emphasis added). Respondents assert that "Asano is a large and cumbersome pedal system, and there was no reason a pedal designer would turn to it" (*id.* at 13). *See also id.* at 45 ("[N]o designer would use Asano to solve the problem that faced Engelgau.") Therefore, the theory goes, Respondents can properly patent the combination of Asano and a pedal position sensor.

As thus illustrated by Respondents' own argument to this Court, the Federal Circuit "teaching-suggestion-motivation test"

(Pet. App. 8a) purports to make a contestable issue of "fact," and subject to jury trial (Pet. Br. at 17 n.13, 35-38), the question whether an admitted prior art reference can be used as the *starting point* in an invalidity analysis under § 103(a). It would be difficult to imagine a greater source of legal uncertainty and instability: a circular, judge-made "test" that purports to make the *premise* of a patent validity inquiry dependent on the inquiry's *outcome*.

Contrary to Respondents' argument, § 103(a) requires that the patentability of claimed subject matter be assessed against "the prior art," not merely against *that portion* of the prior art that a lay jury might be convinced, in litigation, a hypothetical "person having ordinary skill in the art," tasked with solving a *particular applicant's* "problem," might have been "motivated" to "turn to" within the field of an alleged invention (Resp. Br. at 13-14). The subjective perceptions and constraints that Mr. Engelgau allegedly faced when making his alleged "invention" (e.g., "the heating duct on the F350," Resp. Br. at 4) simply do not limit "the prior art" against which the validity of claim 4 of the Engelgau patent must be measured, and are no measure of the degree of skill that was needed to make at least some subject matter that falls within the broad language of that claim.

Evidence of "motivation" may, in an appropriate case, be circumstantial evidence of the degree of skill that was required to conceive of particular claimed subject matter. For example, the existence of "motivation" to make claimed subject matter, coupled with a failure of other skilled artisans to make claimed subject matter over a significant period of time, may "give light to the circumstances surrounding the origin of the subject matter sought to be patented," *Graham*, 383 U.S. at 17-18, and so may, "in a close case, tip the scales in favor of patentability." *Goodyear Tire & Rubber Co. v. Ray-O-Vac Co.*, 321 U.S. 275, 279 (1944). *See* Pet. Br. at 39. But in this case, Respondents presented no evidence of "long-felt need or failure of others" to make subject matter falling within the scope of claim 4 of the Engelgau patent. Pet. App. 48a.

This Court's precedents also make clear that what Respondents criticize as so-called "inappropriate hindsight analysis" (Resp. Br. at 12), is not a "proposal" of Petitioner (*id.*), but is instead the long-established law of the United States. For example, in *St. Germain v.*

Brunswick, 135 U.S. 227 (1890), the Court invalidated a patent claim drawn to a revolving billiard cue rack. After noting that revolving tables and casters had been used in other applications, the Court held (*id.* at 231; emphasis added):

> We think that competent knowledge and skill in his calling on the part of an intelligent mechanic *would have enabled him, on request*, to construct the revolving billiard cue-rack in question, without calling the inventive faculty into play.

So here, based on the undisputed evidence of record, a person having ordinary skill in the art of the Engelgau patent, if requested to adapt an Asano pedal to actuate an electronic throttle control, clearly would have been capable of doing so "without calling the inventive faculty into play." *Id.* Whether such a person would have had hypothetical "motivation" to modify an Asano pedal (e.g., because his or her employer owned the Asano pedal design and bid on a particular vehicle program) is wholly extraneous and irrelevant to the skill-based patent validity analysis that § 103(a) and this Court's precedents require.

The preemptive effect of admitted prior art is an aspect of "the ultimate question of patent validity" which is "one of law," *Graham*, 383 U.S. at 17, and properly resolvable on a motion for summary judgment. Respondents' "motivation" argument concerning the Asano patent is just that, a legal argument about the preemptive effect of an admitted prior art reference. It raises no "genuine issue as to any material fact." Fed. R. Civ. P. 56(c).

B. Invalidity Under Section 103(a) May Be Proven by a Preponderance of the Evidence

Petitioner agrees with the Solicitor General (SG Br. at 27 n.13) that the undisputed evidence of record establishes the invalidity of claim 4 of the Engelgau patent as a matter of law, irrespective of what substantive evidentiary burden is applied in this case. Nevertheless, since Respondents have relied so heavily on the substantive evidentiary burden that purportedly applies to this case (Resp. Br. at 7, 13, 42, 45, 46-47 n.16, 48), that issue is discussed briefly here.

35 U.S.C. § 282 provides in part: "The burden of establishing invalidity of a patent or any claim thereof shall rest on the party asserting such invalidity." The statute says nothing whatever about "clear and convincing evidence." In numerous cases (e.g., Pet. Br. at 3-5 & n.1, 18-27 & nn.14-17, 39 & n.19), this Court has determined the merits of patent invalidity defenses without subjecting such defenses to a "clear and convincing evidence" burden of proof.

Prior to the creation of the Federal Circuit, regional Circuits had held, following this Court's precedents, that in the "usual" patent case, "a preponderance of the evidence is sufficient to establish invalidity." *Dickstein v. Seventy Corp.*, 522 F.2d 1294, 1297 (6th Cir. 1975); *accord Rains v. Niaqua, Inc.*, 406 F.2d 275, 278 (2d Cir. 1969) ("[I]n the usual case a preponderance of the evidence determines the issue"). The contrary position of the Federal Circuit below (Pet. App. at 5a, 14a n.4) traces to dicta in a 1983 Federal Circuit panel decision that gave no reasoning and cited no authority whatsoever (Pet Br. at 10 n.10).

Respondents cite *Radio Corp. of America v. Radio Engineering Laboratories, Inc.*, 293 U.S. 1 (1934), for the broad proposition that "the clear and convincing evidence standard is well founded because the expert patent examiner has considered the question and deemed the invention non-obvious" (Resp. Br. at 46 n.16). In fact, *Radio Corp.* involved an attempt to re-litigate an issue of inventorship that had previously been determined in a contested adversarial proceeding among the rival claimants. 293 U.S. at 3-6. Such a situation could not be further removed from a case like the present one, where the asserted patent was procured *ex parte* and the facts relied upon to establish invalidity (e.g., the disclosure of the Asano patent) were never the subject of any prior administrative or judicial consideration.

Issued patent claims are "presumed valid." 35 U.S.C. § 282. But this presumption has nothing to do with substantive evidentiary burdens and cannot reasonably be read as calling for a blanket imposition of a "clear and convincing evidence" burden of proof with respect to any and all historical facts that might be presented in support of any and every defense of invalidity under 35 U.S.C. § 282(2). *See* U.S. Federal Trade Comm'n, *To Promote Innovation:*

The Proper Balance of Competition & Patent & Policy, chap. 5, at 28 (2003) ("[T]here is no persuasive reason why the level of that burden should be clear and convincing evidence.").[15]

"Because the preponderance of the evidence standard results in a roughly equal allocation of the risk of error between litigants, we presume that this standard is applicable in civil actions between private litigants unless 'particularly important individual interests or rights are at stake.'" *Grogan v. Garner*, 498 U.S. 279, 286 (1991) (quoting *Herman & MacLean v. Huddleston*, 459 U.S. 375, 389 (1983)).

Congress clearly knows how to specify a "clear and convincing evidence" burden of proof when that is its intention. *See, e.g.*, 35 U.S.C. § 273(b)(4) ("A person asserting the defense under this section shall have the burden of establishing the defense by clear and convincing evidence."). It clearly did not do so in 35 U.S.C. § 282. *Cf. KP Permanent Make-Up, Inc. v. Lasting Impression I, Inc.*, 543 U.S. 111, 118 (2004) (where Congress uses language in one section of a statute but not in another, the omission is presumed to be intentional).

CONCLUSION

For the reasons set forth above and in Petitioner's Opening Brief, the Court should reverse the judgment of the Federal Circuit.

---

[15] Contrary to Respondents' suggestion (Resp. Br. at 46-47 n.16) the burden of proof applicable to historical facts—the probability that a fact is true—is an entirely distinct concept from the probability that a legal conclusion (e.g., patent invalidity) follows from established historical facts. Questions of law are argued, not "proved." Thus, regardless of whether the invalidity of claim 4 of the Engelgau patent follows more directly from the disclosure of the Asano patent than from the "Rixon '183 system" cited by Respondents (*id.*), the burden of proving historical facts in a patent case should not depart from the usual preponderance of the evidence standard in the absence of an explicit legislative command, as exists for example in 35 U.S.C. § 273(b)(4) and various other federal statutes.

Respectfully submitted,

James W. Dabney
Counsel of Record
1 New York Plaza
New York, New York 10004
(212) 859-8000

Stephen S. Rabinowitz
Henry C. Lebowitz
Mitchell E. Epner
Darcy M. Goddard
FRIED, FRANK, HARRIS,
SHRIVER & JACOBSON LLP
New York, New York 10004

Attorneys for Petitioner

John F. Duffy
FRIED, FRANK, HARRIS,
SHRIVER & JACOBSON
LLP
Washington, D.C. 20004

November 16, 2006

FILED
JUN 6 - 2006
OFFICE OF THE C
SUPREME COURT,

8

No. 04-1350

IN THE

Supreme Court of the United States

KSR International Co.,

Petitioner,

v.

Teleflex, Inc. et al.

On Petition for a Writ of Certiorari
to the United States Court of Appeals
for the Federal Circuit

SUPPLEMENTAL BRIEF FOR THE RESPONDENTS

Thomas C. Goldstein
AKIN GUMP STRAUSS HAUER &
FELD LLP
1333 New Hampshire Ave., NW
Washington, DC 20036

Rodger D. Young
(Counsel of Record)
Steven Susser
David Poirier
YOUNG & SUSSER, P.C.
26200 American Drive
Suite 305
Southfield, MI 48034
(248) 353-8620

June 6, 2006

WILSON-EPES PRINTING CO., INC. – (202) 789-0096 – WASHINGTON, D. C. 20001

TABLE OF CONTENTS

TABLE OF CONTENTS i
TABLE OF AUTHORITIES ii
SUPPLEMENTAL BRIEF FOR THE RESPONDENTS 1
A. The Federal Circuit's Current Obviousness Jurisprudence Is Fully in Line with the Solicitor General's Reading of This Court's Precedent. 2
B. This Case Is a Singularly Poor Vehicle to Consider the Proper Scope of Obviousness Law. 6
CONCLUSION 10

TABLE OF AUTHORITIES

Cases

Cardiac Pacemakers, Inc. v. *St. Jude Med., Inc.*, 381 F.3d 1371 (CAFC 2004) 6
Cross Medical Prods., Inc. v. *Medtronic Sofamor Danek*, 424 F.3d 1293 (CAFC 2005) 3, 5
Eolas Tech. v. *Microsoft Corp.*, 399 F.3d 1325 (CAFC 2005) 5
Freedman Seating Co. v. *American Seating Co.*, 420 F.3d 1350 (CAFC 2005) 5
Group One, Ltd. v. *Hallmark Cards, Inc.*, 407 F.3d 1297 (CAFC 2005) 6
In re Battiston, 139 Fed. Appx. 281 (CAFC 2005) 4
In re Beasley, 117 Fed. Appx. 739 (CAFC 2004) 5
In re Bigio, 381 F.3d 1320 (CAFC 2004) 4
In re Dembiczak, 175 F.3d 994 (CAFC 1999) 4
In re Fujimura, 130 Fed. Appx. 465 (CAFC 2005) 4
In re Fulton, 391 F.3d 1195 (CAFC 2004) 4
In re Harris, 409 F.3d 1339 (CAFC 2005) 4
In re Johnston, 435 F.3d 1381 (CAFC 2006) 4
In re Kahn, 441 F.3d 977 (CAFC 2006) 3
In re Kumar, 418 F.3d 1361 (CAFC 2005) 5
In re Lee, 277 F.3d 1338 (CAFC 2002) 4
In re Morgan, 87 Fed. Appx. 746 (CAFC 2004) 5
In re Nylen, 97 Fed. Appx. 293 (CAFC 2004) 5
In re Scroggie, No. 05-1370, 2006 U.S. App. LEXIS 6169 (Mar. 13, 2006) 5
In re Sibia Neurosciences, Inc., 156 Fed. Appx. 314 (2005) .. 4
In re Thomas, 151 Fed. Appx. 930 (CAFC 2005) 4
In re Watts, 354 F.3d 1362 (CAFC 2004) 5
Iron Grip Barbell Co. v. *USA Sports*, 392 F.3d 1317 (CAFC 2004) 5

Isco Int'l v. *Conductus, Inc.*,
123 Fed. Appx. 974 (CAFC 2005) 5
Jore Corp. v. *Kouvato, Inc.*,
117 Fed. Appx. 761 (CAFC 2005) 5
Knoll Pharm. Co. v. *Teva Pharms. USA, Inc.*,
367 F.3d 1381 (CAFC 2004) 7
Koito Mfg. Co. v. *Turn-Key-Tech, LLC*,
381 F.3d 1142 (CAFC 2004) 6
Medpointe Healthcare v. *Hi-Tech Pharmacal*,
115 Fed. Appx. 76 (CAFC 2004) 5
Merck & Co. v. *Teva Pharm.*, 395 F.3d 1364 (CAFC 2005) . 5
National Steel Car v. *Canadian Pac. Ry.*,
357 F.3d 1319 (CAFC 2004) 5
No. 01-1791, *FATA Aluminum* v. *Vulcan Eng'g Co.*,
537 U.S. 814 (2002) 1
Norian Corp. v. *Stryker Corp.*, 363 F.3d 321 (CAFC 2004).. 5
Princeton Biochemicals v. *Beckman Coulter, Inc.*,
411 F.3d 1332 (CAFC 2005) 5
Ruiz v. *A.B. Chance Co.*, 357 F.3d 1270 (CAFC 2004) 5
Scimed Life Sys. v. *Johnson & Johnson*,
87 Fed. Appx. 729 (CAFC 2004) 5
Syntex LLC v. *Apotex*, 407 F.3d 1371 (CAFC 2005) 5
Typeright Keyboard Corp. v. *Microsoft Corp.*,
374 F.3d 1151 (CAFC 2004) 6

Other Authorities

CVSG Br., *Regal Cinemas* v. *Stewmon*,
cert. denied, 542 U.S. 937 (2004) (No. 03-641) 8
CVSG Br., *Dura Pharms., Inc.* v. *Broudo*,
cert. granted, 544 U.S. 336 (2005) (No. 03-932) 8
CVSG Br., *Zapata Hermas Sucesores, S.A.* v.
Hearthside Baking Co., cert. denied, ...
540 U.S. 1068 (2003) (No. 02-1318) 8
CVSG Br., *Higbee Co.* v. *Chapman*, cert. denied,
542 U.S. 945 (2004) (No. 02-1646) 8

CVSG Br., *Honeywell Int'l, Inc.* v. *Hamilton Sundstrand Corp.*, cert. denied, 125 S. Ct. 2928 (2005) (No. 04-293) 8

CVSG Br., *Andrx Pharms., Inc.* v. *Kroger Co.*, cert. denied, 543 U.S. 939 (2004) (No. 03-779) 8

CVSG Br., *Comstock Resources, Inc.* v. *Kennard*, cert. denied, 125 S. Ct. 2957 (2005) (No. 04-165) 8

SUPPLEMENTAL BRIEF FOR THE RESPONDENTS

This Court has previously denied certiorari on the question presented an extraordinary seven times, permitting the Federal Circuit's jurisprudence to evolve in the light of that court's growing experience and special expertise.[1] That course was sound. The Solicitor General's brief expresses the view of his client, the Patent and Trademark Office (PTO), that Federal Circuit decisions from several years ago (see S.G. Br. 14 n.6) imposed too onerous a standard for finding patents invalid as obvious. But the Federal Circuit's case law is substantially different today from the period that gave rise to any such concerns. The government's brief is notably silent with respect to the avalanche of Federal Circuit case law on this issue over the past three years. These more recent decisions belie the government's assertion that the court of appeals currently applies a rigid and inflexible approach that is hostile to findings of obviousness. But even if this Court were to conclude that it should intervene to alter the course of the Federal Circuit's obviousness jurisprudence, this interlocutory case would be, for numerous reasons, a terrible vehicle in which to do so.

Certiorari should accordingly be denied here as it has been so many times in the past with respect to the question presented. If the Federal Circuit later reverses course, and employs too rigorous an obviousness standard, the Solicitor General will no doubt file an appropriate petition for certiorari from a ruling of that court reversing a finding of obviousness by the Board of Patent Appeals and Interferences. With respect to this case at the very least, the Court should await the development of a record on remand on the question of obviousness.

---

[1] In addition to the cases cited in the brief in opposition (at 20-21 & n.7), the Court in October 2002 denied a petition on the question filed by David Frederick. No. 01-1791, *FATA Aluminum* v. *Vulcan Eng'g Co.*, 537 U.S. 814 (2002).

A. The Federal Circuit's Current Obviousness Jurisprudence Is Fully in Line with the Solicitor General's Reading of This Court's Precedent.

The Solicitor General identifies two supposed flaws in the Federal Circuit's obviousness jurisprudence. Neither of those assertions accurately characterizes that court's current case law.

1. The Solicitor General describes the correct test for finding obviousness under this Court's precedent as follows:

> The question of nonobviousness is ultimately one of law, but it turns on "several basic factual inquiries." This Court has identified four such inquiries: (1) "the scope and content of the prior art"; (2) "differences between the prior art and the claims at issue"; (3) "the level of ordinary skill in the pertinent art"; and (4) "secondary considerations," such as "commercial success," that might provide "indicia of obviousness or nonobviousness."

S.G. Br. 3-4 (citing *Graham* v. *John Deere Co.*, 383 U.S. 1, 17-18 (1996)). The court of appeals in this case said the following:

> While obviousness is ultimately a legal determination, it is based on several underlying issues of fact, namely: (1) the scope and content of the prior art; (2) the level of skill of a person of ordinary skill in the art; (3) the differences between the claimed invention and the teachings of the prior art; and (4) the extent of any objective indicia of non-obviousness. *See Graham*, 383 U.S. at 17-18.

Pet. App. 6a. The rule described by the Solicitor General and applied by the unpublished opinion in this case are thus *the same*.

The Solicitor General maintains that there nonetheless is a difference because the Federal Circuit fails to show sufficient flexibility in applying its rule. Though the government

repeats that broad assertion seven times, it is just that: an assertion. The government is unable to provide a single citation in support. Two recent Federal Circuit decisions illustrate that the Solicitor General's characterization of that court's precedent does not reflect the evolving state of the case law. See *In re Kahn*, 441 F.3d 977 (2006); *Cross Medical Prods., Inc.* v. *Medtronic Sofamor Danek, Inc.*, 424 F.3d 1293 (2005). These decisions recognize that the nominally required "suggestion, teaching, or motivation" to combine prior art may be found "implicitly." In *Kahn*, the court affirmed the PTO's finding of obviousness, explaining at great length that a "teaching, suggestion, or motivation" can be found "implicitly" based on *precisely* the factors that the Solicitor General says are relevant: "what the combined teachings, knowledge of one of ordinary skill in the art, and the nature of the problem to be solved as a whole would have suggested to those of ordinary skill in the art." 441 F.3d at 987-88. In *Cross Medical*, the court of appeals applied the "implicit" obviousness standard to reverse a district court ruling that a patent was not obvious, explaining that obviousness could be found on the basis of a "problem [that] was within the general knowledge of those of ordinary skill in the art," 424 F.3d at 1322, even if the patent is not directed at "the identical problem addressed in [the] prior art," *id.* at 1323. No fair distinction can be drawn between the rule proposed by the Solicitor General and the flexible standard articulated by the Federal Circuit in these more recent decisions and adhered to in this case.

In a single paragraph (at 14-15), the Solicitor General acknowledges that the Federal Circuit's precedent provides that "the teaching, suggestion, or motivation 'may be found explicitly or implicitly.'" But the government maintains that this "seemingly helpful observation * * * has not, in practice, substantially reduced the burden that its test imposes." *Id.* 15. How many of the numerous published Federal Circuit decisions from the past several years on this issue does the Solicitor General discuss (or even cite) in support of his characterization of the Federal Circuit's "practice"? Zero. In a foot-

note (*id.* 15 n.7), the Solicitor General cites two older decisions, neither of which involved any assertion that obviousness should be found implicitly; the issue simply did not arise in either decision. See *In re Lee*, 277 F.3d 1338 (2002); *In re Dembiczak*, 175 F.3d 994 (1999). The government's only remaining argument is that the unpublished decision in this case erroneously rejects a finding of "implicit" obviousness on the ground that a person of ordinary knowledge and experience "would not be implicitly motivated" to combine the prior art in the manner described by respondent's patent. S.G. Br. 15. That is inaccurate: the court of appeals merely held that the conflicts in the summary judgment record precluded a finding of obviousness and remanded for further proceedings. Pet. App. 16a-17a; *infra* at 6-7.

2. The Solicitor General also asserts that the Federal Circuit's jurisprudence is erroneous because it supposedly unduly disfavors obviousness determinations with the consequence that "it grants patent applicants unjustified rewards for disclosing non-innovative subject matter, and it forecloses competitors from using the public storehouse of knowledge that should be freely available to all." S.G. Br. 16. The Solicitor General cites no Federal Circuit decision in support of those assertions and the objective evidence is to the contrary.

Respondents have reviewed the Federal Circuit's obviousness jurisprudence for the period in which this case has been on appeal – from January 2004 until now. In that time, the court of appeals affirmed twelve findings by the PTO that patents were invalid as obvious.[2] It reversed only twice,

---

[2] *In re Kahn*, 441 F.3d 977 (2006); *In re Johnston*, 435 F.3d 1381 (2006); *In re Sibia Neurosciences, Inc.*, 156 Fed. Appx. 314 (2005); *In re Thomas*, 151 Fed. Appx. 930 (2005); *In re Battiston*, 139 Fed. Appx. 281 (2005); *In re Harris*, 409 F.3d 1339 (2005); *In re Fujimura*, 130 Fed. Appx. 465 (2005); *In re Fulton*, 391 F.3d 1195 (2004); *In re Bigio*, 381 F.3d 1320 (2004); *In re Nylen*, 97 Fed. Appx. 293 (2004); *In re Morgan*, 87 Fed. Appx. 746 (2004); *In re Watts*, 354 F.3d 1362 (2004).

never ordering a finding of non-obviousness but instead remanding in both cases to permit the PTO to make an obviousness determination on a proper record.[3]

With respect to district courts, the Federal Circuit either affirmed district court findings of obviousness or reversed findings of non-obviousness in fourteen cases.[4] Including this case, it reversed obviousness determinations only five times; in four of those, it remanded for further proceedings on obvi-

---

[3] In one, the court vacated the Board's decision and remanded the case to provide the patent applicant with the opportunity to respond to new data, when the Board "found facts not found by the examiner" and then did not provide the patent applicant an opportunity to respond to its findings. *In re Kumar*, 418 F.3d 1361, 1368 (2005). In the other, the court determined that the Board's decision failed the "substantial evidence" standard of review applied to the factual aspects of patent proceedings. *In re Beasley*, 117 Fed. Appx. 739 (2004). In one other case, the court reversed and remanded, but did so because it rejected the Board's claim construction. *In re Scroggie*, No. 05-1370, 2006 U.S. App. LEXIS 6169 (Mar. 13, 2006).

[4] In six cases, the court of appeals affirmed district court finding of obviousness. *Princeton Biochemicals* v. *Beckman Coulter, Inc.*, 411 F.3d 1332 (2005); *Iron Grip Barbell Co.* v. *USA Sports*, 392 F.3d 1317 (2004); *Norian Corp.* v. *Stryker Corp.*, 363 F.3d 321 (2004); *Ruiz* v. *A.B. Chance Co.*, 357 F.3d 1270 (2004); *Isco Int'l* v. *Conductus, Inc.*, 123 Fed. Appx. 974 (2005); *Scimed Life Sys.* v. *Johnson & Johnson*, 87 Fed. Appx. 729 (2004). In eight cases, the court of appeals reversed district court findings of non-obviousness, sometimes finding obviousness as a matter of law and other times remanding. *Merck & Co.* v. *Teva Pharm.*, 395 F.3d 1364 (2005); *Jore Corp.* v. *Kouvato, Inc.*, 117 Fed. Appx. 761 (2005); *Cross Medical Prods.* v. *Medtronic Sofamor Danek, Inc.*, 424 F.3d 1293 (2005); *Freedman Seating Co.* v. *American Seating Co.*, 420 F.3d 1350 (2005); *Syntex LLC* v. *Apotex*, 407 F.3d 1371 (2005); *Eolas Tech.* v. *Microsoft Corp.*, 399 F.3d 1325 (2005); *National Steel Car* v. *Canadian Pac. Ry.*, 357 F.3d 1319 (2004); *Medpointe Healthcare* v. *Hi-Tech Pharmacal*, 115 Fed. Appx. 76 (2004).

ousness.[5] In the fifth case, the court reinstated a jury verdict that had been overridden by the district court.[6]

The Federal Circuit's combined jurisprudence over the past two-and-a-half years thus includes twenty-six rulings favoring obviousness findings, compared with six rulings overturning those determinations (even then recognizing that obviousness could be found on a fuller record), and one case holding that a patent is non-obvious (and there only because the jury had made such a finding). That record fully answers the Solicitor General's bald assertion that the court of appeals is hostile to findings that patents are invalid as obvious.

B. This Case Is a Singularly Poor Vehicle to Consider the Proper Scope of Obviousness Law.

Even if this Court concluded, contrary to the foregoing, that the Question Presented merited review, this case would be a singularly poor vehicle in which to grant certiorari for three distinct reasons. Any of these would be a sufficient basis for denying certiorari; together they make out an overwhelming case against review.

1. The question of obviousness arose in this case on petitioner's motion for summary judgment. Petitioner was accordingly required to prove that there were "no genuine issues of material fact." Pet. App. 4a. Significantly, "[b]ecause patents are presumed valid," petitioner was required to satisfy not merely the usual burdens of proof but instead "prove by *clear and convincing evidence* that [the patent] cannot reasonably be held to be nonobvious." *Id.* at 5a (quoting *Knoll Pharm. Co.* v. *Teva Pharms. USA, Inc.*, 367 F.3d 1381, 1383

---

[5] *Group One, Ltd.* v. *Hallmark Cards, Inc.*, 407 F.3d 1297 (2005); *Koito Mfg. Co.* v. *Turn-Key-Tech, LLC*, 381 F.3d 1142 (2004); *Typeright Keyboard Corp.* v. *Microsoft Corp.*, 374 F.3d 1151 (2004); *Knoll Pharm. Co.* v. *Teva Pharms. USA, Inc.*, 367 F.3d 1381 (2004).

[6] *Cardiac Pacemakers, Inc.* v. *St. Jude Med., Inc.*, 381 F.3d 1371 (2004).

(2004)) (emphasis added). That is an exceedingly difficult burden and petitioner did not come close to satisfying it. Petitioner submitted only the affidavit of one of its own self-interested employees, which did not even "go to the ultimate issue of motivation to combine prior art." Pet. App. 14a. Respondents, by contrast, put forward the affidavits of two independent experts who concluded that respondents' invention was novel. *Id.* 15a-16a.

The panel accordingly reversed and remanded the district court's judgment in this case not merely because the trial court applied an incorrect standard in evaluating the question of obviousness (the question raised by the petition), but also because it was "improper for [the] district court to make credibility determinations." Pet. App. 16a. "Therefore, by crediting KSR's expert declarant and discrediting the two declarants offered by Teleflex, *the district court erred as a matter of law.*" *Ibid.* (emphasis added).

2. This case is a poor vehicle for the further, related reason that it is interlocutory. The court of appeals "remanded the case 'for further proceedings on the issue of obviousness.'" S.G. Br. 9. Ordinarily, the fact that a case is interlocutory is a sufficient basis to deny certiorari, as other questions of federal law meriting this Court's review may be decided in the further proceedings. But here the basis for denying review is far stronger than in the mine-run case. The proceedings on remand involve building a record with respect to the *very question* on which certiorari is sought and with respect to which there are at this point only three affidavits. Still more important, the proceedings on remand are essential to provide a factual foundation to address the test apparently advanced by the Solicitor General – *viz.*, that the obviousness determination should rest on a common-sens "totality of the circumstances" evaluation of the evidence. In this case, at this early stage, a record on those issues has not been compiled.

This is not a controversial point. Respondents have reviewed every case in which this Court called for the views of the Solicitor General from the 2003 Term forward. Seven of those cases were interlocutory. In six, the government raised that fact as a basis for denying certiorari. Indeed, the Solicitor General's briefs in three of those cases have a *separate section* devoted to the proposition that "[i]n light of the current interlocutory posture of this case, the Court should not grant certiorari." CVSG Br. 8, *Comstock Resources, Inc.* v. *Kennard*, cert. denied, 125 S. Ct. 2957 (2005) (No. 04-165).[7] This Court denied certiorari in every one. In the single case in which the government recommended granting certiorari notwithstanding the case's interlocutory posture, the proceedings on remand were on a *different issue* than the question presented, which had been finally resolved in the case, and which was the subject of an important circuit conflict. CVSG Br. 15, *Dura Pharms., Inc.* v. *Broudo*, cert. granted, 544 U.S. 336 (2005) (No. 03-932). This case, of course, is very different, as the very question on remand is whether the patent is invalid on obviousness grounds and no conflict exists.

Indeed, even if one accepts that the Solicitor General's rule differs from the current Federal Circuit test, the difference would not change the judgment. The case still inevitably would have to be remanded to the district court for development of an appropriate record to apply that standard. Even if this Court agreed with the government on the appropriate

---

[7] See also CVSG Br. 18, *Zapata Hermas Sucesores, S.A.* v. *Hearthside Baking Co.*, cert. denied, 540 U.S. 1068 (2003) (No. 02-1318); CVSG Br. 19, *Higbee Co.* v. *Chapman*, cert. denied, 542 U.S. 945 (2004) (No. 02-1646). The point is made, albeit less dramatically than through a separate section, in the following briefs as well: CVSG Br. 7, *Andrx Pharms., Inc.* v. *Kroger Co.*, cert. denied, 543 U.S. 939 (2004) (No. 03-779); CVSG Br. 20, *Honeywell Int'l, Inc.* v. *Hamilton Sundstrand Corp.*, cert. denied, 125 S. Ct. 2928 (2005) (No. 04-293); CVSG Br. 1, 19, *Regal Cinemas* v. *Stewmon*, cert. denied, 542 U.S. 937 (2004) (No. 03-641).

legal standard, any opinion that it could issue in this case would accordingly be singularly uninformative for the lower courts. As discussed *supra*, the panel opinion already expressly embraces all of the factors that the Solicitor General argues this Court should apply. The Court would essentially be left in the position of affirming the unpublished disposition in this case, but including a generalized directive that the lower courts should find more patents obvious. Such an admonition, issued outside of the context of a record to which this Court can apply it, would not substantially advance the goal of providing clarity in this area of the law.

3. This case is also a poor vehicle because the case simply does not present, and thus does not give this Court the opportunity to address, one of the government's principal objections to the Federal Circuit's obviousness jurisprudence. The Solicitor General emphasizes (at 17) the PTO's complaint that Federal Circuit precedent "unduly restricts the ability of PTO to reject obvious patent applications." The Solicitor General maintains that "[w]hen PTO applies its technical expertise and reasonably articulates why a patent claim is obvious under Section 103(a), that determination is entitled to deference." *Ibid.* But the PTO *granted* the patent in this case. As a consequence, no challenge to the PTO's findings arises. The government's argument demonstrates that it would be more appropriate to grant certiorari in one of the many cases the Federal Circuit hears on direct appeal from the Board of Patent Appeals and Inferences. See *supra* at 4 n.2. Of note, the Solicitor General on behalf of the Board and PTO is able to petition for certiorari from an adverse ruling of the Federal Circuit in such a case.[8]

---

[8] In any event, here too the government is not describing the current state of Federal Circuit case law. The *Kahn* decision explains that the required findings are minimal: "rejections on obviousness grounds cannot be sustained by mere conclusory statements; instead, there must be some articulated reasoning with some rational underpinning." 441 F.3d at 988. Findings by the PTO are

CONCLUSION

For the foregoing reasons, the petition for a writ of certiorari should be denied.

Respectfully submitted,

Thomas C. Goldstein
AKIN GUMP STRAUSS
HAUER & FELD LLP
1333 New Hampshire Ave., NW
Washington, DC 20036

Rodger D. Young
(Counsel of Record)
Steven Susser
David Poirier
YOUNG & SUSSER, P.C.
26200 American Drive
Suite 305
Southfield, MI 48034
(248) 353-8620

June 6, 2006

---

sustained so long as "a reasonable mind might accept the evidence as adequate"; the question is whether there is more "than a 'mere scintilla' of evidence from which a reasonable mind could find a motivation to combine." *Id.* at 985, 989.

859

(50)

No. 04-1350

FILED
OCT 31 2006
OFFICE OF THE CLERK
SUPREME COURT, U.S.

IN THE

Supreme Court of the United States

KSR INTERNATIONAL CO.,
Petitioner,

v.

TELEFLEX INC. ET AL.,
Respondents.

On Writ of Certiorari
to the United States Court of Appeals
for the Federal Circuit

SUPPLEMENTAL BRIEF FOR THE RESPONDENTS

Kenneth C. Bass, III
Robert G. Sterne
STERNE, KESSLER,
GOLDSTEIN & FOX P.L.L.C.
1100 New York Ave., NW
Washington, DC 20005

Rodger D. Young
Steven Susser
David Poirier
YOUNG & SUSSER, P.C.
26200 American Drive
Suite 305
Southfield, MI 48034

Thomas C. Goldstein
(*Counsel of Record*)
Michael A. O'Shea
Garreth A. Sarosi
Christopher R. Pudelski
Sarah C. Rispin
AKIN GUMP STRAUSS
HAUER & FELD, LLP
1333 New Hampshire Ave., NW
Washington, DC 20036
(202) 887-4060

(Add'l counsel on inside cover)

October 31, 2006

WILSON-EPES PRINTING CO., INC. – (202) 789-0096 – WASHINGTON, D.C. 20001

ADDITIONAL COUNSEL TO RESPONDENTS

Samuel J. Haidle
David M. LaPrairie
HOWARD & HOWARD
ATTORNEYS, P.C.
39400 Woodward Ave.
Suite 101
Bloomfield Hills, MI 48304

Tracy L. Casadio
Elizabeth H. Rader
AKIN GUMP STRAUSS
HAUER & FELD, LLP
2029 Century Park East
Suite 2400
Los Angeles, CA 90067-3012

SUPPLEMENTAL BRIEF FOR THE RESPONDENTS

Pursuant to Supreme Court Rule 25.5, respondents respectfully submit this Supplemental Brief to address intervening materials that were not available in time to be included in respondents' Brief on the Merits. Specifically, contemporaneously with respondents' merits brief, more than twenty briefs *amici curiae* were filed supporting respondent. Inevitably, the briefs of respondents' *amici*, like petitioner's *amici*, overlap in significant respects. But in contrast to petitioner, which is able to use its Reply Brief to provide this Court with a guide to the most important points made by the briefs of its supporting *amici*, respondents can only do so through this non-argumentative Supplemental Brief. A listing of the abbreviations for the *amicus curiae* briefs appears as an Appendix.

BRIEFING IN SUPPORT OF THE EXISTING SUGGESTION STANDARD

The suggestion standard is a flexible inquiry that considers a broad range of factors:

AIPLA 13-15, 20-23; B&L Profs 2-12; DC Bar 9-12; Fallbrook 12-15; Ford, 8-12

The suggestion standard follows from this Court's precedents:

3M 21-25; AIPLA 8-12; PhRMA 12-15

The suggestion standard is consistent with § 103 of the Patent Act:

B&L Profs 13-20; FCBA 12-13; IPO 3-6

The suggestion standard addresses the inventive choice in which preexisting prior art is "merely" combined in novel ways:

Fallbrook 3-5; Michelin 16-17; PhRMA 22-25

The suggestion standard is more fair, predictable, and administrable than alternatives:

empirical studies: B&L Profs 28; Tessera 11-12
perspective of academics: B&L Profs 26-30; C&B Profs 6-7
perspective of industry: 3M 9-12; BIO 18-21, 26-30; NYIPLA 22-23
perspective of practicing lawyers: ABA 8-9
perspective of PTO: Benson 3-5; IPLAC 4-6

The suggestion standard is necessary to address hindsight bias:

3M 12-16, 26; Altitude 17-19; B&L Profs 21-25; NYIPLA 16-19

The suggestion standard creates a factual record that facilitates appellate review:

3M 11; Universities 18

BRIEFING RESPONDING TO PROPOSED ALTERNATIVE STANDARDS FOR DETERMINING OBVIOUSNESS

The Petitioner's "capability" standard:

is inconsistent with this Court's precedents: Altitude 23-24; Michelin 21-24; PhRMA 22-25
is inconsistent with § 103: Fallbrook 6-7; Michelin 22; PhRMA 25
improperly invites hindsight analysis: B&L Profs 24
would weaken patent protections and innovation: Altitude 24; PhRMA 22-25
would effectively repeal the presumption of validity for issued patents embodied in 35 U.S.C. § 282: Altitude 27

The Petitioner's "synergy" standard:

is inconsistent with this Court's precedents: AIPLA 26-28; IPO 12-14; Michelin 17-21

is inconsistent with § 103: C&B Profs 10-11; IPO 14-15; Michelin 15-17; PhRMA 26-30

is unworkable and fails to provide adequate guidance to participants in the patent system: AIPLA 27-28; BIO 25; C&B Profs 12-14

improperly invites hindsight analysis: Tessera 14-15

would weaken patent protections and innovation: C&B Profs 14-16; Fallbrook 3-5, 9-10; IPO 14

would effectively repeal the presumption of validity for issued patents embodied in 35 U.S.C. § 282: Fallbrook 6; Tessera 13-14; Universities 18-20

The Solicitor General's "extraordinary innovation" standard:

is inconsistent with this Court's precedents: 3M 26; BIO 23 n.8

is inconsistent with § 103: AIPLA 28-29; Fallbrook 6-7; IPO 15

is unworkable and fails to provide adequate guidance to participants in the patent system: 3M 26

effectively repeal the presumption of validity for issued patents embodied in 35 U.S.C. § 282: AIPLA 29

Changing the prevailing suggestion standard would destabilize the patent system:

general industry: 3M 16-18; Fallbrook 7-12

specific industries: BIO 5-10, 26-30; Michelin 25-28; Tessera 16-29

OTHER ARGUMENTS RAISED BY *AMICI CURIAE*

Background to the history and purpose of § 103 of the Patent Act:

BIO 11-15; NYIPLA 4-12; PhRMA 5-8

The Federal Circuit and its predecessor have consistently applied the suggestion standard for over 60 years:

Altitude 20; FCBA 14; Tessera 4-6

The suggestion standard is a product of the Federal Circuit's unique role in implementing this Court's decision in *Graham*:

FPLC 18-21

To the extent that the well-settled suggestion standard requires revision, Congress is the appropriate body to make any significant changes:

ABA 9-10; Thomason 12-17; TPL 5

To the extent that patent law has problems, the suggestion standard is not responsible for them:

Altitude 28-30; Ford 15-16; Hollaar 12-20

Under established standards of appellate review, the Federal Circuit properly reversed the district court's summary judgment order:

Thomason 7-12; UIA 9-12, 17-20

CONCLUSION

The judgment of the court of appeals should be affirmed.

Respectfully submitted,

Kenneth C. Bass, III
Robert G. Sterne
STERNE, KESSLER, GOLDSTEIN & FOX P.L.L.C.
1100 New York Ave., NW
Washington, DC 20005

Rodger D. Young
Steven Susser
David Poirier
YOUNG & SUSSER, P.C.
26200 American Drive
Suite 305
Southfield, MI 48034

Samuel J. Haidle
David M. LaPrairie
HOWARD & HOWARD ATTORNEYS, P.C.
39400 Woodward Ave.
Suite 101
Bloomfield Hills, MI 48304

Thomas C. Goldstein
(*Counsel of Record*)
Michael A. O'Shea
Garreth A. Sarosi
Christopher R. Pudelski
Sarah C. Rispin
AKIN GUMP STRAUSS HAUER & FELD, LLP
1333 New Hampshire Ave., NW
Washington, DC 20036
(202) 887-4060

Tracy L. Casadio
Elizabeth H. Rader
AKIN GUMP STRAUSS HAUER & FELD, LLP
2029 Century Park East
Suite 2400
Los Angeles, CA 90067-3012

APPENDIX

ABBREVIATIONS FOR *AMICI CURIAE* BRIEFS

3M = 3M Co. et al.

ABA = American Bar Association

AIPLA = American Intellectual Property Law Association

Altitude = Altitude Capital Partners et al.

B&L Profs = Business and Law Professors

Benson = Christopher R. Benson et al.

BIO = Biotechnology Industry Organization

C&B Profs = Chemistry and Bioengineering Professors

DC Bar = Bar Association of the District of Columbia – Patent, Trademark & Copyright Section

Fallbrook = Fallbrook Technologies, Inc. et al.

FCBA = Federal Circuit Bar Association

Ford = Ford Motor Co. & DaimlerChrysler Corp.

FPLC = Franklin Pierce Law Center, Intellectual Property Amicus Clinic

Hollaar = Professor Lee A. Hollaar

IPLAC = Intellectual Property Law Association of Chicago

IPO = Intellectual Property Owners Association

Michelin = Michelin North America, Inc. et al.

NYIPLA = New York Intellectual Property Law Association

PhRMA = Pharmaceutical Research and Manufacturers of America

Tessera = Tessera, Inc. et al.

Thomason = Lee Thomason

TPL = Technology Properties Ltd.

UIA = United Inventors Association

Universities = Wisconsin Alumni Research Foundation et al.

553c

Supreme Court, U.S.
FILED
AUG 2 2 2006
OFFICE OF THE CLERK

(54)

No. 04-1350

In the Supreme Court of the United States

KSR INTERNATIONAL CO., PETITIONER

v.

TELEFLEX INC., ET AL.

ON WRIT OF CERTIORARI
TO THE UNITED STATES COURT OF APPEALS
FOR THE FEDERAL CIRCUIT

BRIEF FOR THE UNITED STATES AS AMICUS CURIAE SUPPORTING PETITIONER

PAUL D. CLEMENT
Solicitor General
Counsel of Record

PETER D. KEISLER
Assistant Attorney General

THOMAS G. HUNGAR
Deputy Solicitor General

JEFFREY P. MINEAR
Assistant to the Solicitor General

ANTHONY J. STEINMEYER
ANTHONY A. YANG
Attorneys

Department of Justice
Washington, D.C. 20530-0001
(202) 514-2217

JAMES A. TOUPIN
General Counsel

JOHN M. WHEALAN
Deputy General Counsel and Solicitor

WILLIAM G. JENKS
ROBERT J. MCMANUS
Associate Solicitors
United States Patent and Trademark Office
Alexandria, Va. 22313

QUESTION PRESENTED

Whether a claimed invention can be "obvious," and therefore unpatentable under 35 U.S.C. 103(a), without proof of some "teaching, suggestion, or motivation" to modify or combine the prior art in the manner claimed.

TABLE OF CONTENTS

Page

Interest of the United States 1
Statement 2
A. The Patent Act's requirement of nonobviousness ... 3
B. The subject matter at issue 4
C. The proceedings below 6
Summary of argument 9
Argument:
The Federal Circuit has prescribed a flawed test for ascertaining whether a claimed invention is obvious 11
A. This Court's decisions establish the proper framework for evaluating whether a claimed invention is "obvious" within the meaning of the Patent Act 11
B. The Federal Circuit's teaching-suggestion-motivation test should not be the exclusive means of establishing obviousness 16
C. This Court should reaffirm its sound approach to evaluating obviousness and apply it to this case 24
Conclusion 30

TABLE OF AUTHORITIES

Cases:

Adams v. *Bellaire Stamping Co.*, 141 U.S. 539 (1981) .. 28
Ag Pro, Inc. v. *Sakraida*, 474 F.2d 167 (5th Cir. 1937), rev'd, 425 U.S. 273 (1976) 11, 14, 15, 17, 28
American Hoist & Derrick Co. v. *Sowa & Sons, Inc.*, 725 F.2d 1350 (Fed. Cir. 1984) 27
Anderson's-Black Rock, Inc. v. *Pavement Salvage Co.*, 396 U.S. 57 (1969) 12, 14, 15, 28, 29

Cases—Continued: Page

Berg, In re, 320 F.3d 1310 (Fed. Cir. 2003) 27
Bonito Boats, Inc. v. *Thunder Craft Boats, Inc.*, 489 U.S. 141 (1989) 3, 4, 11, 22
Brown & Williamson Tobacco Corp. v. *Philip Morris, Inc.*, 229 F.3d 1120 (Fed. Cir. 2000) 18
Calmer, Inc. v. *Cook Chem. Co.*, 336 F.2d 110 (8th Cir. 1964), rev'd *sub nom. Graham* v. *John Deere Co.*, 383 U.S. 1 (1966) 17
Chicago Rawhide Mfg. Co. v. *Crane Packing Co.*, 523 F.2d 452 (7th Cir. 1975) 27
Deuel, In re, 51 F.3d 1552 (Fed. Cir. 1995) 29
Dembiczak, In re, 175 F.3d 994 (Fed. Cir. 1999) 16, 18, 23
Graham v. *Connor*, 490 U.S. 386 (1989) 21
Graham v. *John Deere Co.*, 383 U.S. 1 (1966) ..... *passim*
Great Atl. & Pac. Tea Co. v. *Supermarket Equip. Corp.*, 340 U.S. 147 (1950) 12
Hailes v. *Van Wormer*, 87 U.S. (20 Wall.) 353 (1873) .. 28
Hotchkiss v. *Greenwood*, 52 U.S. (11 How.) 248 (1851) 3, 12
Johnston, In re, 502 F.2d 765 (C.C.P.A. 1974), rev'd, *sub nom.* 425 U.S. 219 (1976) 12, 14, 17
Kahn, In re, 441 F.3d 977 (Cir. 2006) 17
Kotzab, In re, 217 F.3d 1365 (Fed. Cir. 2000) 8, 18
Laboratory Corp. of Am. Holdings v. *Metabolite Labs., Inc.*, 126 S. Ct. 2921 (2006) 25
Lincoln Eng'g Co. v. *Stewart-Warner Corp.*, 303 U.S. 545 (1938) 14, 28

Cases–Continued: Page

Maryland v. *Garrison*, 480 U.S. 79 (1987) 21

McGinley v. *Franklin Sports, Inc.*, 262 F.3d 1339 (Fed. Cir. 2001) 18

O'Farrell, In re, 853 F.2d 894 (Fed. Cir. 1988) 29

Pfaff v. *Wells Elecs., Inc.*, 525 U.S. 55 (1998) 11

Radio Corp. of Am. v. *Radio Eng'g Labs., Inc.*, 293 U.S. 1 (1934) 27

Reckendorfer v. *Faber*, 92 U.S. 347 (1876) 28

Rompilla v. *Beard*, 125 S. Ct. 2456 (2005) 21

Rouffet, In re, 149 F.3d 1350 (Fed. Cir. 1998) 16, 18, 20, 26

Ruiz v. *A.B. Chance Co.*, 234 F.3d 654 (Fed. Cir. 2000) 16

Sang-Su Lee, In re, 277 F.3d 1338 (Fed. Cir. 2002) 18, 26

Strickland v. *Washington*, 466 U.S. 668 (1984) 21

Toledo Pressed Steel Co. v. *Standard Parts, Inc.*, 307 U.S. 350 (1939) 28

United States v. *Adams*, 383 U.S. 39 (1966) 15, 17, 28

Warner-Jenkinson Co. v. *Hilton Davis Chem. Co.*, 520 U.S. 17 (1997) 26

Winner Int'l Royalty Corp. v. *Wang*, 202 F.3d 1340 (Fed. Cir. 2000) 18

Zurko, In re, 258 F.3d 1379 (Fed. Cir. 2001) 26

Constitution, Treaty and statutes:

U.S. Const., Art. I, § 8, Cl. 8 (Patent Clause) 1, 3, 11

Agreement on Trade-Related Aspects of Intellectual Property Rights, Dec. 15, 1993, 33 I.L.M. 81 2

Statutes—Continued: Page

Patent Act of 1952, ch. 950, 66 Stat. 792 (35 U.S.C. 1 *et seq.*):
35 U.S.C. 100 *et seq.* 3
35 U.S.C. 100-103 3
35 U.S.C. 103(a) ..... *passim*
35 U.S.C. 282 27

Miscellaneous:

John F. Duffy, *Rethinking the Prospect Theory of Patents*, 71 U. Chi L. Rev. 439 (2004) 19

FTC, *To Promote Innovation: The Proper Balance of Competition and Patent Law and Policy* (2003) <www.ftc.gov/os/2003/10/innovationrpt.pdf> . 2, 23, 25

<http://www.demonstratives.com/animations/intellectual_property/ksr/asano.avi> 29

William M. Landes & Richard A. Posner, *The Economic Structure of Intellectual Property Law* (2003) 20

Robert P. Merges & John F. Duffy, *Patent Law and Policy: Cases and Materials* (3d ed. 2002) 20

National Research Council of the National Academies, *A Patent System for the 21st Century* (Stephen A. Merrill et al. eds. 2004) <http://www.nap.edu/html/patentsystem/0309089107.pdf> 19

Miscellaneous—Continued: Page

Office of the Att'y Gen., U.S. Dep't of Justice, *Report of the Department of Justice's Task Force on Intellectual Property* (Oct. 2004) <http://www.usdoj. gov/olp/ip_task_force _report.pdf> 2

David Schumann, *Obviousness with Business Methods*, 56 U. Miami L. Rev. 727 (2002) 20

John R. Thomas, *Formalism at the Federal Circuit*, 52 Am. U. L. Rev. 771 (2003) 19

U.S. Dep't of Justice & FTC, *Antitrust Guidelines for the Licensing of Intellectual Property* (Apr. 6, 1995), *reprinted in* 4 Trade Reg. Rep. (CCH) ¶ 20,733 (1995) <http://www.usdoj.gov/atr/public/guidelines/0558.pdf> 2

In the Supreme Court of the United States

No. 04-1350

KSR INTERNATIONAL CO., PETITIONER

v.

TELEFLEX INC., ET AL.

ON WRIT OF CERTIORARI
TO THE UNITED STATES COURT OF APPEALS
FOR THE FEDERAL CIRCUIT

BRIEF FOR THE UNITED STATES AS AMICUS CURIAE SUPPORTING PETITIONER

INTEREST OF THE UNITED STATES

The United States has a vital interest, encompassing a variety of perspectives, in the proper articulation of the standards governing the issuance and validity of patents. Pursuant to the Patent Clause of the Constitution (Art. I, § 8, Cl. 8), Congress has charged the United States Patent and Trademark Office (PTO), an agency in the Department of Commerce, with responsibility for examining patent applications, issuing patents, and advising the President on domestic and international issues of patent policy. See 35 U.S.C. 1 *et seq.* The United States is regularly engaged in litigation over the validity and scope of patents, sometimes as a patent holder but more commonly as a defendant in infringement actions. The United States has also entered into international agreements that address patent rights. See,

e.g., Agreement on Trade-Related Aspects of Intellectual Property Rights, Dec. 15, 1993, 33 I.L.M. 81. Furthermore, because the standards for issuance and validity of patents may directly affect competition and innovation in the marketplace, this case implicates questions of concern to both the Federal Trade Commission (FTC) and the Antitrust Division of the United States Department of Justice.[1]

STATEMENT

Petitioner KSR International Co. is a Canadian company that markets foot-operated throttle controls—*i.e.*, gas pedals—for passenger cars and light trucks. Pet. App. 20a. Respondents Teleflex Inc. and its subsidiary Technology Holding Co. sued KSR in the United States District Court for the Eastern District of Michigan for patent infringement, alleging that two of KSR's adjustable gas pedal systems literally infringe Claim 4 of their U.S. Patent No. 6,237,565 B1 (the Engelgau patent). *Id.* at 1a-2a, 20a, 23a-24a. The district court granted KSR's motion for summary judgment, concluding that Claim 4 of the Engelgau patent is obvious within the meaning of Section 103(a) of the Patent Act of 1952, 35 U.S.C. 103(a), and therefore invalid. See Pet. App. 18a-49a. The Federal Circuit vacated the grant of summary judgment, concluding that the district court incorrectly applied its "teaching-suggestion-motivation" test in determining that Claim 4 would have been obvious to a person of ordinary skill in the art. *Id.* at 1a-17a.

---

[1] See generally, FTC, *To Promote Innovation: The Proper Balance of Competition and Patent Law and Policy* (Oct. 2003) (FTC Report) <http://www.ftc.gov/os/2003/10/innovationrpt.pdf>; Office of the Att'y Gen., U.S. Dep't of Justice, *Report of the Department of Justice's Task Force on Intellectual Property* (Oct. 2004) <http://www.usdoj.gov/olp/ip_task_force_report.pdf>; U.S. Dep't of Justice & FTC, *Antitrust Guidelines for the Licensing of Intellectual Property* (Apr. 6, 1995) (*Licensing Guidelines*), *reprinted in* 4 Trade Reg. Rep. (CCH) ¶ 20,733 (1995) <http://www.usdoj.gov/atr/public/guidelines/0558.pdf>.

A. The Patent Act's Requirement Of Nonobviousness

The Patent Clause of the Constitution vests Congress with authority "[t]o promote the Progress of Science and useful Arts by securing for limited Times to * * * Inventors the exclusive Right to their * * * Discoveries." U.S. Const. Art. I, § 8, Cl. 8. Congress has implemented the Patent Clause through statutory enactments, commonly known as the Patent Acts, that have set out the conditions for securing a patent and that strike "a careful balance between the need to promote innovation and the recognition that imitation and refinement through imitation are both necessary to invention itself and the very lifeblood of a competitive economy." *Bonito Boats, Inc.* v. *Thunder Craft Boats, Inc.*, 489 U.S. 141, 146 (1989); see Gov't Cert. Br. 2 n.1 (citing past statutes).

The Patent Act of 1952, as amended, provides the current law governing the issuance and validity of patents. See 35 U.S.C. 100 *et seq.* Sections 101 through 103 (35 U.S.C. 101-103) provide, as a general matter, that "patentability is dependent upon three explicit conditions: novelty and utility as articulated in § 101 and § 102, and non-obviousness * * *, as set out in § 103." *Graham* v. *John Deere Co.*, 383 U.S. 1, 12 (1966); see *Bonito Boats*, 489 U.S. at 146-151, 156-157. Because "each of [these conditions] must be satisfied," only those new and useful inventions that would not have been "obvious" at the time of their discovery exhibit the "level of innovation necessary to sustain patentability." *Graham*, 383 U.S. at 4, 17.

Congress enacted Section 103(a) to codify the principle, which this Court first recognized in *Hotchkiss* v. *Greenwood*, 52 U.S. (11 How.) 248 (1851), that a new and useful device does not qualify for a patent unless it embodies a "degree of skill and ingenuity" beyond that of "an ordinary mechanic acquainted with the business." *Id.* at 267. See *Graham*, 383 U.S. at 11-18. Section 103(a) states that a claimed invention is not eligible for a patent

> if the differences between the subject matter sought to be patented and the prior art are such that the subject matter as a whole would have been obvious at the time the invention was made to a person having ordinary skill in the art to which said subject matter pertains.

35 U.S.C. 103(a). "The nonobviousness requirement extends the field of unpatentable material beyond that which is known to the public under § 102, to include that which could readily be deduced from publicly available material by a person of ordinary skill in the pertinent field of endeavor." *Bonito Boats*, 489 U.S. at 150 (citing *Graham*, 383 U.S. at 15).

The question of nonobviousness is ultimately one of law, but it turns on "several basic factual inquiries." *Graham*, 383 U.S. at 17. This Court has identified several such inquiries: (1) "the scope and content of the prior art"; (2) "differences between the prior art and the claims at issue"; and (3) "the level of ordinary skill in the pertinent art." *Ibid.* In addition, the Court has stated that "secondary considerations," such as "commercial success" or "long felt but unsolved needs," might provide "indicia of obviousness or nonobviousness." *Id.* at 17-18.

B. The Subject Matter At Issue

The technology at issue in this case is relatively simple and its evolution is straightforward. Before the 1970s, the driver of an automobile typically controlled the vehicle's speed by pressing a foot-operated gas pedal, which was bolted at a fixed location within the footwell of the vehicle interior. The pedal would act as a lever, rotate around a pivot point, and pull a cable or mechanical linkage to actuate the engine throttle. See Pet. App. 20a-21a. In the 1970s, automobile manufacturers began offering adjustable pedal assemblies, designed to accommodate drivers of different heights, that enabled a driver to adjust the pedal position forward and backward within the footwell. *Id.* at 19a-20a; see C.A. App.

1568 (U.S. Patent No. 5,010,782, Col. 1, ll. 14-27 (Asano patent)).[2]

In the 1990s, automobile manufacturers sold increasing numbers of vehicles in the United States that employed computer-controlled engines and electronic throttle controls. See Pet. App. 21a, 41a. The manufacturers of gas pedal assemblies adapted their non-adjustable assemblies by attaching an electronic sensor to the pedal, in place of the mechanical linkage, to determine the pedal position and transmit a corresponding electronic signal to the throttle. See *id.* at 21a. The designs of that era reveal configurations for non-adjustable pedals, mounted on the wall of the footwell, in which the electronic pedal position sensor is actuated by the pedal pivot and is located on a stationary wall bracket to which the pedal and its pivot connect. See *id.* at 33a-35a.[3]

---

[2] The driver's adjustment of the pedal position could alter the mechanical "lever[age]" at the pedal pad, by changing the distance between the pad and the pedal pivot, and it could consequently require the driver to apply a different amount of force when operating the pedal. See C.A. App. 1568 (Asano patent, Col. 1, ll. 28-45). The 1989 Asano design addressed that problem by attaching the adjustable pedal assembly to a fixed pivot point located on a stationary bracket in the footwell. See *id.* at 1562, 1565-1567 (Asano patent, Fig. 5-8); Pet. App. 32a-33a. That design then utilized mechanical linkages to preserve a constant force ratio and counteract the effect of adjusting the distance between the pedal pad and pedal pivot. See C.A. App. 1568, 1570-1571 (Asano patent, Col. 1, ll. 48-65; Col. 2, ll. 15-23; Col. 8, l. 63 - Col. 9, l. 4); Pet. App. 12a-13a & n.3. Not all adjustable pedal assemblies seek to address that constant force problem. See, *e.g.*, C.A. App. 1490-1491 (U.S. Patent No. 5,632,183, Col. 1, ll. 35-38, 52-54, Col. 2, ll. 13-15, Col. 4, ll. 26-29 (Rixon '183 patent)).

[3] U.S. Patent No. 5,385,068 (White patent) (C.A. App. 717-723) is illustrative. The White patent, which was filed in 1992, discloses a modular electronic pedal position sensor similar to a sensor later installed in certain 1994 Chevrolet pick-up trucks. That sensor, known as a CTS 503 Series position sensor, was designed to be mounted on the pedal pivot of a gas pedal and included a fitting that allowed the sensor

Respondents' Engelgau patent—the patent at issue in this case—reveals an adjustable pedal apparatus that combines an adjustable gas pedal assembly with an electronic pedal position sensor. The electronic sensor, which measures the pedal position at the pivot, is attached to the support bracket that connects the pedal assembly to the wall of the footwell. Pet. App. 2a, 26a. The patent explains that the pedal assembly "can be any of various adjustable pedal assemblies" and the electronic pedal position sensor can be any such sensor "known in the art." C.A. App. 38-39 (Engelgau patent, Col. 2, ll. 54-56; Col. 3, ll. 22-24).

Claim 4, which is set out verbatim at Pet. App. 3a, describes an apparatus composed of: (1) a support mounted to the vehicle structure; (2) an adjustable pedal assembly with a pedal arm that moves fore and aft with respect to the support; (3) a pivot located on the support to which the pedal assembly is attached; and (4) an electronic pedal position sensor attached to the support. *Id.* at 3a, 25a-26a. Claim 4 further describes that the electronic pedal position sensor is responsive to the pivot, the position of which remains constant with pedal arm adjustments. *Id.* at 3a, 26a.

C. The Proceedings Below

KSR supplies a major automobile manufacturer with adjustable gas pedal assemblies for use with electronically controlled throttles in certain truck lines. Respondents, who compete with KSR, brought this suit alleging that KSR's pedal assemblies infringed three of respondents' patents. As

---

to engage the pedal pivot shaft on different makes and models of vehicle gas pedal assemblies. See Pet. App. 32a; C.A. App. 1051-1053 (Willemsen Decl. paras. 12-19). The sensor was mounted on the pedal support bracket in Chevrolet trucks and determined the pedal's position from the movement of the pedal pivot shaft. *Id.* at 1052-1053, 1077 (Willemsen Decl. paras. 16-17, 19 & Exh. 8). See also, *e.g.*, U.S. Patent Nos. 4,958,607 (Lundberg patent), 5,233,882 (Byram patent), 5,241,936 (Byler patent) (C.A. App. 708-716), 5,887,488 (Riggle patent).

a result of a series of motions and stipulations, the parties focused their dispute on whether KSR's pedal assemblies infringed Claim 4 of the Engelgau patent. The parties filed cross-motions for summary judgment, and the district court granted judgment for KSR on the ground that respondents' claimed invention would have been obvious to a person of ordinary skill in the art and that claim 4 of the Engelgau patent was therefore invalid. See Pet. App. 18a-24a.

The district court reached that conclusion based on the four-part inquiry that this Court set out in *Graham*, *supra*. See 383 U.S. at 17-18. It first determined that all of the elements of Claim 4 were revealed in the prior art because the Asano patent (which the patent applicant did not present to the PTO) taught each element except Claim 4's reference to the use of an electronic pedal position sensor, which other prior art references taught. See Pet. App. 28a-35a. The district court then determined that a person of ordinary skill in the art would have had college training in mechanical engineering and experience in the field of pedal assemblies. *Id.* at 35a-36a. The court next found that there was "little difference between the teachings of the prior art and claims of the patent-in-suit," and it further found that a person skilled in the art would readily "combine a pivotally mounted adjustable pedal assembly [the Asano patent] with an off-the-shelf modular pedal position sensor to solve the problem" that the Engelgau patent addressed. *Id.* at 39a, 44a. The court also evaluated, as a "secondary consideration," respondents' claim of commercial success, but the court concluded that the consideration was "insufficient to overcome [KSR's] clear and convincing evidence of obviousness." *Id.* at 48a.

In analyzing whether it would have been obvious to a person of ordinary skill to combine the Asano patent with an electronic pedal position sensor, the district court applied the Federal Circuit's "teaching-suggestion-motivation test." See Pet. App. 8a, 40a-46a. Under that test, a claimed invention that combined elements already present in the prior art would

not have been obvious at the time of invention unless there was a teaching, suggestion, or motivation in the prior art that would have led a person of ordinary skill to combine the prior art references in the manner claimed. See *id.* at 40a-41a. The district court found that a person of ordinary skill would have been motivated to combine pre-existing adjustable pedal assemblies with co-existing electronic pedal position sensors and to avoid known problems with other pedal assemblies. *Id.* at 42a-43a. The court observed that the prior art references were closely related, others in the field had made similar combinations, and the patent examiner, who did not have the benefit of the Asano reference, had recognized similar combinations as obvious. *Id.* at 43a-46a.

The court of appeals reversed on the ground that the district court had incorrectly applied the teaching-suggestion-motivation test. Pet. App. 1a-17a. The court of appeals stated that its test required the district court to make factual findings showing the "specific understanding or principle within the knowledge of the skilled artisan that would have motivated one with no knowledge of [the] invention to make the combination" in "the particular manner claimed by claim 4 of the [Engelgau] patent." *Id.* at 11a-12a (quoting *In re Kotzab*, 217 F.3d 1365, 1371 (Fed. Cir. 2000)); see *id.* at 16a. In other words, the court of appeals ruled that the district court could not find the Engelgau patent invalid as obvious without "specific findings as to a suggestion or motivation to attach an electronic control to the support bracket of the Asano assembly." *Id.* at 12a.

The court of appeals concluded that the Asano patent failed to provide such motivation because it addressed "the constant pedal force problem" in adjustable pedal assemblies, see note 2, *supra*, whereas the Engelgau patent purported to disclose a "smaller, less complex, and less expensive electronic pedal assembly." Pet. App. 12a-13a. The court of appeals also stated that the prior art references that taught the importance of avoiding movement of the pedal position sen-

sor's wiring in non-adjustable pedal assemblies likewise were insufficient because they did not address the problem of wire chafing in "an adjustable pedal assembly" and did "not necessarily go to the issue of motivation to attach the electronic control on the support bracket." *Id.* at 13a.

The court of appeals concluded that KSR's other evidence describing the prior use of electronic pedal position sensors failed "to make out a *prima facie* case of obviousness." Pet. App. 14a. The court acknowledged that the evidence demonstrated a motivation to combine an electronic pedal position sensor with an adjustable pedal assembly and showed that such a sensor "'could have been' mounted on the support bracket of a pedal assembly," but the court concluded that it failed to show a particular "motivation to attach the electronic control to the support bracket." *Id.* at 14a-15a. The court of appeals accordingly concluded that genuine issues of material fact existed concerning "whether a person of ordinary skill in the art would have been motivated * * * to attach an electronic control to the support structure of the [Asano] pedal assembly." *Id.* at 16a-17a. It therefore vacated the district court's judgment and remanded the case "for further proceedings on the issue of obviousness, and, if necessary, proceedings on the issues of infringement and damages." *Id.* at 17a.

SUMMARY OF ARGUMENT

This Court's decision in *Graham* v. *John Deere Co.*, 383 U.S. 1 (1966), sets out the framework for determining whether a claimed invention is nonobvious within the meaning of Section 103(a) of the Patent Act of 1952, 35 U.S.C. 103(a). Under that decision, a court must determine, as questions of fact, the content of the prior art, the differences between the prior art and the inventor's claims, and the level of ordinary skill in the art. The court must then make a legal judgment whether a person of ordinary skill in the field would have found the claimed invention obvious. This Court has applied the *Graham* framework in a variety of contexts to resolve the core

issue: Whether the claimed invention manifests the extraordinary level of innovation that justifies the award of congressionally prescribed rights to exclude others from practicing the invention.

The Federal Circuit has incorrectly supplanted the *Graham* framework by adopting the mandatory teaching-suggestion-motivation test. That test improperly transforms one legitimate means of establishing obviousness—proof that the prior art provided a teaching, suggestion, or motivation for combining separate prior art references—into an inflexible requirement for what should remain a highly contextual judgment. The test, which places unjustified constraints on the necessary exercise of discerning judgment, inappropriately broadens the category of nonobvious and therefore patentable inventions. At the same time, it underestimates the capacity of courts and patent examiners to avoid improper reliance on hindsight. The test exacts a heavy cost in the form of unwarranted extension of patent protection to obvious subject matter.

This Court should restore the proper content of the nonobviousness analysis by refocusing the inquiry on the key question that the *Graham* framework addresses: whether the claimed invention manifests the extraordinary level of innovation, beyond the capabilities of a person having ordinary skill in the art, that warrants the award of a patent. When the PTO or a court reviews a claimed invention that consists of a combination of known art, each should be permitted to conclude—without a mandatory showing of a "teaching, suggestion, or motivation" to combine the known features—that the combination is within the grasp of a person of ordinary skill and therefore obvious. Under a correct application of *Graham*, the court of appeals' judgment should be reversed.

ARGUMENT

THE FEDERAL CIRCUIT HAS PRESCRIBED A FLAWED TEST FOR ASCERTAINING WHETHER A CLAIMED INVENTION IS OBVIOUS

A. This Court's Decisions Establish The Proper Framework For Evaluating Whether A Claimed Invention Is "Obvious" Within The Meaning Of The Patent Act

The Patent Clause authorizes Congress "[t]o promote the Progress of * * * useful Arts, by securing for limited Times to * * * Inventors the exclusive Right to their * * * Discoveries." U.S. Const. Art. I, § 8, Cl. 8. As this Court has explained, "[i]nnovation, advancement, and things which add to the sum of useful knowledge are inherent requisites in a patent system which by constitutional command must 'promote the Progress of . . . useful Arts." *Graham* v. *John Deere Co.*, 383 U.S. 1, 6 (1966). The patent system thus "represents a carefully crafted bargain that encourages both the creation and public disclosure of new and useful advances in technology, in return for an exclusive monopoly for a limited period of time." *Pfaff* v. *Wells Elecs., Inc.*, 525 U.S. 55, 63 (1998) (citing *Bonito Boats, Inc.* v. *Thunder Craft Boats, Inc.*, 489 U.S. 141, 150-151 (1989)). That bargain's effectiveness in inducing creative effort and disclosure depends on "a backdrop of free competition in the exploitation of unpatented designs and innovations." *Bonito Boats*, 489 U.S. at 151.

Section 103(a)'s nonobviousness requirement performs a fundamental role in ensuring that "free exploitation of ideas will be the rule, to which the protection of a federal patent is the exception." 489 U.S. at 151. It embodies the understanding that "concepts within the public grasp, or those so obvious that they readily could be, are the tools of creation available for all." *Id.* at 156. This Court, in a series of decisions beginning with *Graham*, *supra*, and continuing through *Sakraida*

v. *Ag Pro, Inc.*, 425 U.S. 273 (1976), has articulated and applied the key principles that govern the nonobviousness inquiry.

1. This Court observed in *Graham* that Section 103(a)'s nonobviousness requirement codifies a "functional approach," traceable to *Hotchkiss* v. *Greenwood*, 52 U.S. (11 How.) 248 (1851), for defining the "general level of innovation necessary to sustain patentability." See *Graham*, 383 U.S. at 3-4, 11-12. That approach proceeds from the perspective of a "hypothetical person" having ordinary skill in the relevant art, *Dann* v. *Johnston*, 425 U.S. 219, 229 (1976), and turns on whether the claimed invention "as a whole" would have been obvious at the time in light of the "differences between the subject matter sought to be patented and the prior art." 35 U.S.C. 103(a).

The "ultimate question" of patent validity under Section 103(a) is a question of law. *Graham*, 383 U.S. at 17. It rests on a legal judgment, informed by relevant facts, of whether the hypothetical person having ordinary skill in the art would have found the invention as a whole "obvious." Section 103(a) itself identifies three "central factors relevant to any inquiry into obviousness" (*Johnston*, 425 U.S. at 226): the scope and content of the prior art, the differences between the prior art and the claims at issue, and the level of ordinary skill in the pertinent art. See *Graham*, 383 U.S. at 17. Other "secondary considerations" —including a long-felt and unfulfilled need for the invention, the prior failures of others, and the commercial success of the invention—may also provide "indicia" supporting the legal conclusion of "obviousness or nonobviousness," *id.* at 17-18, 35-36, but those considerations will not render an obvious invention patentable. *Anderson's-Black Rock, Inc.* v. *Pavement Salvage Co.*, 396 U.S. 57, 61 (1969) (citing *Great Atl. & Pac. Tea Co.* v. *Supermarket Equip. Corp.*, 340 U.S. 147, 153 (1950)).

In specifying nonobviousness as a condition of patentability, Section 103(a) codifies the Court's historic approach to evaluating whether a claimed invention is sufficiently inno-

vative to warrant a patent, *Graham*, 383 U.S. at 17, but it does not dictate an inflexible formula for making the legal determination whether an invention as a whole would have been "obvious." While the Court identified in its *Graham* decision the framework for analysis and the relevant considerations, it observed that the application of Section 103(a) would continue to depend on the "given factual context," that the inquiry is comparable to that involving similar fact-dependant legal judgments such as "negligence and scienter," and that further refinements "should be amenable to a case-by-case development." *Id.* at 18.

2. This Court's decisions from *Graham* forward reflect the understanding that courts must apply Section 103(a) "realistically" as a "practical test of patentability." See 383 U.S. at 17. The Court has accordingly declined to embrace rigid categorical rules that would hamstring the courts or the PTO—which has "the primary responsibility for sifting out unpatentable material" (*id.* at 18)—when making individualized determinations of obviousness. Instead, the Court has consistently evaluated whether the claimed invention is obvious based on a case-by-case assessment whether the claimed innovation reflects an advancement beyond what would be expected from the exercise of ordinary skill in the relevant field at the time of the claimed invention.

For example, in *Graham* and its companion cases (*Calmer, Inc.* v. *Cook Chemical Co.*, and *Colgate-Palmolive Co.* v. *Cook Chemical Co.*), the Court ruled that a claimed invention of a plow improvement and a claimed invention of a container cap were obvious. See 383 U.S. at 24-26, 32-37. In each instance, the Court identified the prior art, the differences between that art and the claimed inventions, and the level of ordinary skill in the relevant fields. Equipped with that information, the Court ruled that the claimed inventions were obvious, concluding that the claimed innovation in chisel plow design "presents no operative mechanical distinctions" (*id.* at 26) and that the container cap innovation taught "no patentable differ-

ence above the prior art" (*id.* at 35). In neither case did the Court find it necessary to make any "specific findings showing a teaching, suggestion, or motivation to combine prior art teachings in the particular manner claimed by the patent at issue" (Pet. App. 16a).

The Court followed the same approach, explicitly endorsing *Graham*'s reasoning, in *Anderson's-Black Rock, Inc.*, 396 U.S. at 59-63. The Court ruled that a paving machine that combined elements already known in the prior art was not patentable under Section 103(a) because the combination, "though perhaps a matter of great convenience," was "reasonably obvious to one with ordinary skill in the art." *Id.* at 60. The Court noted that a different result might obtain if the combination produced a "new or different function," *ibid.* (quoting *Lincoln Eng'g Co.* v. *Stewart-Warner Corp.*, 303 U.S. 545, 549 (1938)), or produced a "synergistic result," *id.* at 61, but the Court did not hold that either such consideration provided a definitive test for nonobviousness.

The Court also employed the *Graham* framework without further embellishment in *Dann* v. *Johnston*, 425 U.S. 219 (1976). The Court ruled there that a claimed invention of a computerized system for managing bank accounts, which built upon the teachings of the prior art, was obvious. *Id.* at 225. Once again, the Court did not require any "specific findings showing a teaching, suggestion, or motivation to combine prior art" (Pet. App. 16a). Indeed, the Court recognized that "[t]here may be differences between respondent's invention and the state of the prior art." 425 U.S. at 229. The Court based its decision on a determination that "[t]he gap between the prior art and respondent's system is simply not so great as to render the system nonobvious to one reasonably skilled in the art." *Id.* at 230.

The Court also adhered to the *Graham* framework in *Sakraida* v. *Ag Pro, Inc.*, 425 U.S. 273 (1976), ruling that a claimed invention of a method for cleaning dairy barns was obvious. The Court made no inquiry into any teaching, sug-

gestion, or motivation from the prior art. Rather, it concluded that the claimed invention "simply arranges old elements with each performing the same function it had been known to perform" and that "this particular use of the assembly of old elements would be obvious to any person skilled in the art of mechanical application." *Id.* at 282. The Court noted that the invention did not produce a "new or different function," *ibid.* (quoting *Anderson's-Black Rock*, 396 U.S. at 60), or produce a "synergistic" result, *ibid.*, " although perhaps producing a more striking result than in previous combinations," *ibid.* The Court concluded that "[s]uch combinations are not patentable under standards appropriate for a combination patent." *Ibid.*

Finally, in the only post-*Graham* decision in which the Court has specifically ruled that a claimed invention is nonobvious, *United States* v. *Adams*, 383 U.S. 39 (1966), the Court did so without suggesting that the mere absence of any teaching, suggestion, or motivation from the prior art would be sufficient to overcome obviousness objections. See *id.* at 51-52. The Court ruled that the invention at issue—a water-activated, constant-voltage battery—was nonobvious, even though it combined elements that were "well known in the prior art" (*id.* at 51), because it demonstrated innovation beyond the level of ordinary skill in the art. The Court explained that the battery performed in a way that was "unexpected" and "far surpassed then-existing wet batteries" (*ibid.*); the teachings of the prior art would have "deter[red] any investigation" into the inventor's combination (*id.* at 52); and "noted experts expressed disbelief in it" (*ibid.*).

In sum, the Court's decisions, from *Graham* through *Sakraida*, require courts to make the legal judgment whether a claimed invention is nonobvious based on a determination whether it advances the relevant art beyond what a person of ordinary skill, presented with the same problem that confronted the inventor, could have achieved at the time of the invention. Those decisions do not embrace a rigid rule that a

claimed invention is nonobvious in the absence of "specific findings showing a teaching, suggestion, or motivation to combine prior art teachings in the particular manner claimed by the patent at issue" (Pet. App. 16a).

B. The Federal Circuit's Teaching-Suggestion-Motivation Test Should Not Be The Exclusive Means Of Establishing Obviousness

The Federal Circuit has altered this Court's *Graham* framework by engrafting a teaching-suggestion-motivation test "to prevent a hindsight-based obviousness analysis." *Ruiz* v. *A.B. Chance Co.*, 234 F.3d 654, 664 (Fed. Cir. 2000); see, *e.g.*, Pet. App. 6a-7a; *In re Dembiczak*, 175 F.3d 994 (Fed. Cir. 1999); *In re Rouffet*, 149 F.3d 1350 (Fed. Cir. 1998). The court of appeals has reasoned that the test is necessary because "[c]ombining prior art references without evidence of such a suggestion, teaching, or motivation simply takes the inventor's disclosure as a blueprint for piecing together the prior art to defeat patentability—the essence of hindsight." Pet. App. 7a (quoting *Dembiczak*, 175 F.3d at 999). As this Court's decision in *Adams* confirms, however, that criticism is unwarranted. Courts are fully capable of distinguishing between obvious and nonobvious inventions without undue influence from the claimed invention itself. And the Federal Circuit's mandatory test, however well intentioned, has proved to be unnecessary, misguided, and counterproductive. It should not be adopted as the exclusive method for establishing obviousness.

1. This Court's decisions from *Graham* through *Sakraida* demonstrate that the Federal Circuit's rigid prophylactic test is not needed to implement Section 103(a)'s nonobviousness requirement. This Court has repeatedly made obviousness determinations without requiring "specific findings showing a teaching, suggestion, or motivation to combine prior art teachings in the particular manner claimed by the patent at issue." Pet. App. 16a. There is no reason to reconsider those

decisions and no basis for the Federal Circuit's categorical test.[4]

2. Under the *Graham* framework, it is certainly true that a claimed invention consisting of a combination of prior art may be rejected as obvious based upon a showing of a teaching, suggestion, or motivation to combine the prior art. See, *e.g.*, *Adams*, 383 U.S. at 47 (discussing why the prior art does not teach or suggest the patented combination). The Federal Circuit's test is flawed because it erroneously elevates that particular method of demonstrating obviousness to the *exclusive* means for doing so. The inflexible constraints that the Federal Circuit has imposed through its teaching-suggestion-motivation test prevent the exercise of discerning judgment in making what is necessarily a highly variable inquiry.[5]

---

[4] The Court's failure to employ such a test is not just happenstance. The Court has had the opportunity, but has repeatedly declined, to embrace similar formulations of a "suggestion" test. See *In re Johnston*, 502 F.2d 765, 772 (C.C.P.A. 1974) (concluding that the patent was nonobvious because the prior art is "not suggestive of the subject matter of the appealed claims"), rev'd, 425 U.S. 219 (1976); *Ag Pro, Inc.* v. *Sakraida*, 474 F.2d 167, 171 (5th Cir. 1973) (stating "references may not be combined to anticipate the patented claim unless they suggest to one with ordinary skill in the art doing what the applicant has claimed"), rev'd, 425 U.S. 273 (1976); *Calmer, Inc.* v. *Cook Chem. Co.*, 336 F.2d 110, 113 (8th Cir. 1964) (stating that the invention is nonobvious because "there is nothing in the prior art suggesting Scoggin's unique combination of these old features"), rev'd *sub nom. Graham* v. *John Deere Co.*, 383 U.S. 1 (1966).

[5] After this Court called for the views of the United States in this case, the Federal Circuit stated that its teaching-suggestion-motivation test "is consistent with governing obviousness law," citing Section 103(a) and this Court's decisions in *Johnston* and *Graham*. See *In re Kahn*, 441 F.3d 977, 987 (Fed. Cir. 2006). But the *Kahn* decision does not acknowledge the key difference: This Court's decisions nowhere suggest that a court or the PTO *must* make the *specific findings* that the Federal Circuit requires. To the contrary, this Court has consistently ruled that a claimed invention may be obvious based on the small

The Federal Circuit in this case unambiguously reaffirmed its oft-stated view that:

> When obviousness is based on the teaching of multiple prior art references, the movant *must* also establish some "suggestion, teaching, or motivation" that would have led a person of ordinary skill in the art to combine the relevant prior art teachings *in the manner claimed*.

Pet. App. 6a (citations omitted; emphasis added); *id.* at 7a, 11a-12a, 16a.[6] That court also reiterated its requirement of a "specific" and "particular" showing in each and every case. *Ibid.*[7]

---

difference between the prior art and what the inventor claimed, without any mention of teaching, suggestion, or motivation. See pp. 13-16, *supra*.

[6] See, *e.g.*, *McGinley* v. *Franklin Sports, Inc.*, 262 F.3d 1339, 1351(Fed. Cir. 2001) ("the central question is whether there is reason to combine [the] references"); *Brown & Williamson Tobacco Corp.* v. *Philip Morris, Inc.*, 229 F.3d 1120, 1124-1125 (Fed. Cir. 2000) ("a showing of a suggestion, teaching, or motivation to combine the prior art references is an 'essential evidentiary component of an obviousness holding'"); see also, *e.g.*, *In re Sang-Su Lee*, 277 F.3d 1338, 1342-1343 (Fed. Cir. 2002); *In re Kotzab*, 217 F.3d 1365, 1370-1371 (Fed. Cir. 2000); *Winner Int'l Royalty Corp.* v. *Wang*, 202 F.3d 1340, 1348-1349 (Fed. Cir. 2000); *In re Rouffet*, 149 F.3d 1350, 1357 (Fed. Cir. 1998).

[7] See, *e.g.*, *Sang-Su Lee*, 277 F.3d at 1343 ("The need for specificity pervades this authority."); *Kotzab*, 217 F.3d at 1371 ("particular findings must be made"); *Dembiczak*, 175 F.3d at 999 (there must be "actual evidence" revealing a "clear and particular" reason to select and combine the elements). The Federal Circuit has repeatedly stated that "'[c]ommon knowledge and common sense,' even if assumed to derive from the [PTO's] expertise, do not substitute" for evidence of a "specific hint or suggestion" to combine prior art. See *In re Sang-Su Lee*, 277 F.3d at 1344-1345. Thus, even when prior art is closely analogous to the invention at issue, the court has required evidence showing a particular suggestion or motivation to combine the prior art to create the invention. See *Dembiczak*, 175 F.3d at 1000.

The Federal Circuit's test is problematic because the factual showing that it requires may be difficult or impossible to make, even though the combination would have been obvious to a person having ordinary skill in the art. For example, a claimed invention may consist of a combination of known elements that, although novel, would be readily apparent to a person of ordinary skill in the art. But there may be no affirmative evidence of a "teaching, suggestion, or motivation" to assemble the combination in the manner claimed, because the combination is sufficiently obvious to persons skilled in the art that no one would have had need or incentive to record the trivial extension of the art.[8] The absence of such information is likely to be most pronounced in new or rapidly expanding technological fields that create sudden economic incentives to adopt or apply existing knowledge in new but readily conceivable combinations. In such circumstances, the first person to perceive the potential commercial advantage of applying existing knowledge and techniques to the new field will often be entitled to a patent under the Federal Circuit's approach, even when implementation of the patented approach would have been a simple and obvious matter for persons possessing the relevant technical skills and presented with the same problem.[9]

---

[8] See National Research Council of the National Academies, *A Patent System for the 21st Century* 90 (Stephen A. Merrill et al. eds. 2004) <http://www.nap.edu/html/patentsystem/0309089107.pdf> ("[S]cientists, artisans, and creative people generally speaking strive to publish non-obvious information. So if it is obvious to those of skill in the art to combine references, it is unlikely that they will publish such information."); see also John R. Thomas, *Formalism at the Federal Circuit*, 52 Am. U. L. Rev. 771, 801-802 (2003).

[9] See John F. Duffy, *Rethinking the Prospect Theory of Patents*, 71 U. Chi. L. Rev. 439, 504-505 (2004) (describing how an unexpected technological development, such as the rise of Internet commerce, can trigger patent applications for "new but obvious" ideas); David Schumann, *Obviousness with Business Methods*, 56 U. Miami L. Rev. 727,

3. The Federal Circuit has attempted to ameliorate the difficulty of producing affirmative evidence of a teaching, suggestion or motivation by instructing that it may be found "explicitly or implicitly"

> 1) in the prior art references themselves; 2) in the knowledge of those of ordinary skill in the art that certain references, or disclosures in those references, are of special interest or importance in the field; or 3) from the nature of the problem to be solved, "leading inventors to look to references relating to possible solutions to that problem."

Pet. App. 6a (citations omitted). As applied by the Federal Circuit, however, the test has often proven difficult to satisfy by "implicit" means, particularly in view of the court's stringent requirement that *specific* evidence be introduced. *E.g.*, *Rouffet*, 149 F.3d at 1359. And to the extent that the test could be satisfied by an entirely "implicit" teaching, suggestion, or motivation from any of those sources, it would add nothing meaningful to the *Graham* framework. Moreover, while a test requiring explicit teachings, suggestions, or motivations at least would streamline the inquiry (at the substantial cost of overprotecting obvious patents), a test that could be satisfied by entirely implicit means would make summary judgment more difficult to obtain. See p. 22, *infra*. In either event, the Federal Circuit's test provides potentially confusing and complicated evidentiary hurdles and detracts from a focus on the statutory concern for nonobviousness vel non.

4. The Federal Circuit's perspective on the problem of hindsight is itself problematic. This Court cautioned in *Graham* against "read[ing] into the prior art the teachings of the invention in issue." 383 U.S. at 36. The Court did not per-

---

731-732 (2002); see also William M. Landes & Richard A. Posner, *The Economic Structure of Intellectual Property Law* 304 (2003); Robert P. Merges & John F. Duffy, *Patent Law and Policy: Cases and Materials* 655 (3d ed. 2002).

ceive, however, any need for extraordinary showings of obviousness to avoid that danger. The Federal Circuit's rigid test underestimates the capacity of courts and the PTO to avoid the influence of hindsight. Retrospective analysis is not unique to patent law, but regularly arises in a wide variety of contexts, including the determination of the competency of counsel in criminal proceedings, see, *e.g.*, *Rompilla* v. *Beard*, 125 S. Ct. 2456, 2462 (2005), reasonable use of force by police officers, see, *e.g.*, *Graham* v. *Connor*, 490 U.S. 386, 396 (1989), and probable cause, see, *e.g.*, *Maryland* v. *Garrison*, 480 U.S. 79, 85 (1987). In those situations, as in *Graham*, the Court has consistently recognized that decisionmakers can avoid the improper influence of hindsight by maintaining conscious awareness of its potentially distorting influence in the decisionmaking process.[10] Courts routinely find, for example, an absence of probable cause in cases in which the police in fact find substantial quantities of contraband in a search. There is no reason to think that courts in patent cases cannot be similarly discerning.

5. The Federal Circuit's flawed teaching-suggestion-motivation test imposes significant burdens on the patent system. That test results in unnecessary proceedings and burdensome evidentiary inquiries, often ending in an erroneous extension of patent protection to obvious subject matter. This case aptly illustrates those problems. The district court found that the Asano patent revealed all of the elements of Claim 4 of the Engelgau patent except the mounting of a pivot-actuated elec-

---

[10] See *Rompilla*, 125 S. Ct. at 2456 ("hindsight is discounted by pegging adequacy to 'counsel's perspective at the time' investigative decisions were made" (quoting *Strickland* v. *Washington*, 466 U.S. 668, 689 (1984)); *Connor*, 490 U.S. at 396 ("'reasonableness' of a particular use of force must be judged from the perspective of a reasonable officer on the scene, rather than with the 20/20 vision of hindsight"); *Maryland*, 480 U.S. at 85 ("we must judge the constitutionality of [the officers'] conduct in light of the information available to them at the time they acted").

tronic sensor on the adjustable pedal assembly support structure, and it concluded that the claim was obvious because other manufacturers had mounted such sensors on non-adjustable pedal assembly support structures. See Pet. App. 42a-44a. The court of appeals nevertheless concluded that a mechanical engineer with experience in pedal assembly, faced with the problem of mounting an electronic sensor on an adjustable pedal assembly, would not be implicitly motivated to transfer to that context the known technique for mounting the electronic sensor on the support structure of non-adjustable assemblies. See *id.* at 11a-13a; see also 13a-15a (rejecting the district court's alternative bases for finding a teaching, suggestion, or motivation to combine the elements).

Under the court of appeals' decision, the district court would need to conduct additional proceedings to determine whether Claim 4 of the Engelgau patent is obvious. Those proceedings would include a trial to determine, among other things, "whether a person of ordinary skill in the art would have been motivated, at the time the invention was made, to attach an electronic control to the support structure of the pedal assembly disclosed by the Asano patent." Pet. App. 16a-17a. Those costly proceedings are unnecessary. The district court convincingly explained that the combination of known elements would have been obvious to a mechanical engineer confronted with the task of developing an electronically controlled adjustable pedal. *Id.* at 40a-46a. The Federal Circuit's test nevertheless prevents summary resolution of the issue, potentially grants respondents an undeserved windfall, and prevents the public from freely employing what should be "tools of creation available to all." *Bonito Boats*, 489 U.S. at 156.

The Federal Circuit's test also hampers the PTO's administrative process by unduly restricting the ability of patent examiners to reject obvious patent applications without an extensive search for evidence of a teaching, suggestion, or motivation. Congress vested the PTO with "primary respon-

sibility for sifting out unpatentable material." *Graham*, 383 U.S. at 18. That responsibility, which requires technical expertise drawn from a wide variety of disciplines, places extraordinary burdens on patent examiners, particularly in light of the *ex parte* nature of patent examinations and the high volume of patent applications.[11] The Federal Circuit's test prevents the PTO from promptly rejecting claimed inventions on obviousness grounds. See generally FTC, *To Promote Innovation: The Proper Balance of Competition and Patent Law and Policy* ch. 4, at 9-15 (Oct. 2003), *available at* <www.ftc.gov/os/2003/10/ innovationrpt.pdf>. That test has forced the PTO to expend considerable resources searching, often without success, for a "suggestion, teaching, or motivation" to justify the rejection of patent claims for combinations that one might expect "would have been obvious at the time the invention was made to a person having ordinary skill in the art." 35 U.S.C. 103(a).[12]

In sum, the Federal Circuit's teaching-suggestion-motivation test, while a well-intentioned attempt to provide further refinement of the *Graham* framework, has proved unsatisfactory from a wide variety of perspectives. This Court should not adopt that flawed categorical test as the exclusive means of determining whether a claimed invention consisting of a

---

[11] In fiscal year 2005 alone, the PTO (which employs approximately 4,500 patent examiners) received more than 400,000 patent applications. Congress intended that Section 103(a) would play a crucial role in filtering out non-innovative applications and focusing the examination efforts on substantial claims.

[12] See, *e.g.*, *Dembiczak*, 175 F.3d at 1000-1001 (ruling that the claimed invention of a lawn trash bag having a Halloween pumpkin design is not prima facie obvious in the absence of a suggestion to combine a normal trash bag with references describing pumpkin designs on paper bags). See also, *e.g.*, Pat. No. 6,368,227 C1 (method of swinging on a swing); Pat. No. 6,266,652 (patent for Internet auction system).

combination of known elements satisfies Section 103(a)'s criterion for patentability.

C. This Court Should Reaffirm Its Sound Approach To Evaluating Obviousness And Apply It To This Case

This Court recognized in *Graham* that the concept of nonobviousness "is not a question upon which there is likely to be uniformity of thought in every given factual context." 383 U.S. at 18. The Court also observed, however, that the difficulties "are comparable to those encountered daily by the courts in such frames of reference as negligence and scienter, and should be amenable to a case-by-case development." *Ibid.* The Court understood that the *Graham* framework might be refined based on the insights gained through experience. The Federal Circuit's misguided appendage of its teaching-suggestion-motivation test, however, has distorted the proper analysis. This Court should restore its sound articulation of Section 103(a)'s nonobviousness standard by reiterating the *Graham* framework and applying it to this case.

1. The Court recognized in *Graham* that the fundamental inquiry under Section 103(a) is whether a claimed invention is sufficiently innovative—in the sense that it reflects an advance beyond the grasp of "a person having ordinary skill in the art" (35 U.S.C. 103(a))—to warrant the award of a temporary right to exclude others from practicing the invention. See 383 U.S. at 12-18. As the Court further explained in *Graham*, Section 103(a) directs that the inquiry should proceed by ascertaining the relevant prior art, identifying the differences between that art and the invention, and determining whether those differences would have been apparent to the person of "ordinary skill" possessing knowledge of all the prior art. See *id.* at 17-18. If the differences would not have been "obvious" to one of ordinary skill—in other words, they would have required *extraordinary* skill—then the inventor has satisfied Section 103(a)'s nonobviousness requirement. See *ibid.*

This Court's decisions make clear that the nonobviousness inquiry ultimately depends heavily on an assessment of the expected capabilities, insights, and ingenuity of the hypothetical person having "ordinary skill in the art to which said subject matter pertains." 35 U.S.C. 103(a). See pp. 13-15, *supra*. That assessment plays a crucial role in moderating the tension between an overly strict nonobviousness standard, which may diminish the patent system's incentives for beneficial research and discovery, and an overly lax nonobviousness standard, which may detrimentally prevent unrestricted exploitation of unremarkable adaptations. See, *e.g.*, FTC, *supra*, ch. 4, at 4-6; *id.* at 11-12 (citing testimony of PTO Deputy Commissioner Stephen G. Kunin); see also *Laboratory Corp. of Am. Holdings* v. *Metabolite Labs., Inc.*, 126 S. Ct. 2921, 2922-2923 (2006) (Breyer, J., dissenting).

The Federal Circuit's test—which focuses attention exclusively on a search for teachings, suggestions, and motivations in the prior art—has misdirected the analysis away from that central inquiry. The Federal Circuit's test effectively assumes that the person of ordinary skill has little capability to combine prior art in the absence of specific teachings or suggestions. The Federal Circuit's systemic diminishment of the role of the person of ordinary skill and its miserly assessment of that person's capabilities has distorted the *Graham* framework. The Court should reiterate that the role of the hypothetical person of ordinary skill is critical in the nonobviousness inquiry and that the person is understood to have "an ability to combine and modify prior art references that is consistent with the creativity and problem-solving skills that in fact are characteristic of those having ordinary skill in the art." FTC, *supra*, ch. 4, at 15.

2. This Court also emphasized in *Graham* that "the primary responsibility for sifting out unpatentable material lies in the Patent Office." 383 U.S. at 18. The PTO's patent examiners possess specialized knowledge in particular technical fields that places them in an advantageous position to assess

the capabilities of the hypothetical "person having ordinary skill in the art." The Federal Circuit's diminishment of the role of the "person having ordinary skill" has correspondingly devalued the PTO's central role in determining whether a claimed invention is patentable. In particular, the Federal Circuit has repeatedly admonished the PTO's Board of Patent Appeals and patent examiners not to rely on "basic knowledge" or "common sense" in finding that combinations of prior art would be within the capabilities of persons having ordinary skill. See, *e.g.*, *In re Sang-Su Lee*, 277 F.3d 1338, 1344-1345 (2002); *In re Zurko*, 258 F.3d 1379, 1386 (Fed. Cir. 2001). The Federal Circuit requires that, "even when the level of skill in the art is high, the Board must identify specifically the principle, known to one of ordinary skill, that suggests the claimed combination." *Rouffet*, 149 F.3d at 1359. That requirement inexorably compels the PTO to grant patents for claimed inventions that, under a proper application of *Graham*, would be obvious. See note 12, *supra*.

This Court should reiterate that, when the PTO applies its technical expertise and reasonably articulates why a patent claim is obvious under Section 103(a), that determination is entitled to deference reflecting "the primacy of the PTO in ensuring that the claims allowed cover only subject matter that is properly patentable." *Warner-Jenkinson Co.* v. *Hilton Davis Chem. Co.*, 520 U.S. 17, 33-34 (1997). The obviousness inquiry should not require the PTO to conduct an unnecessary search for evidence showing a particular suggestion, teaching, or motivation to make insubstantially innovative combinations of elements that are known in the prior art. The PTO should instead be allowed to bring to bear its full expertise— including its reckoning of the basic knowledge and common sense possessed by persons in particular fields of endeavor— when making the predictive judgment whether an invention would have been obvious to a person of ordinary skill in the art. The patent applicant should bear the burden of proving PTO's Board and examiners wrong. Cf. *In re Berg*, 320 F.3d 1310,

1315 (Fed. Cir. 2003) (the findings of patent examiners and administrative patent judges "can establish a prima facie case of obviousness").

3. When—as in *Graham* and in this case—an alleged infringer challenges the validity of an issued patent on obviousness grounds, a court must reassess the validity of a patent. A patent is entitled to a presumption of validity, see 35 U.S.C. 282, and the courts have long spoken in terms of subjecting challengers to a high burden of persuasion. See, *e.g.*, *Radio Corp. of Am.* v. *Radio Eng'g Labs., Inc.*, 293 U.S. 1 (1934). The *Graham* framework should be applied with those principles in mind, but those principles should not stand as an obstacle to invalidation of obvious subject matter. That is particularly true here, because the presumption of validity has less force when the crucial prior art was not presented to the PTO.[13]

The district court correctly concluded in this case that Claim 4 of the Engelgau patent is obvious as a matter of law. That court fastidiously applied the *Graham* analysis by describing the prior art, Pet. App. 28a-35a, ascertaining the level of ordinary skill, *id.* at 35a-36a, and identifying the differences between the prior art and the claimed invention, *id.*

---

[13] The lower courts have taken different approaches to the question whether an alleged infringer must establish invalidity by "clear and convincing evidence" when that infringer has produced pertinent prior art that the patent applicant did not place before the PTO. Compare *American Hoist & Derrick Co.* v. *Sowa & Sons, Inc.*, 725 F.2d 1350, 1360 (Fed. Cir. 1984) (Rich, J.) (the evidentiary burden is constant but the new evidence may "carry more weight"), with *Chicago Rawhide Mfg. Co.* v. *Crane Packing Co.*, 523 F.2d 452, 458 & n.14 (7th Cir. 1975) (Stevens, J.) ("The basis for the requirement that invalidity be established by clear and convincing evidence is largely, if not wholly, dissipated when pertinent prior art is shown not to have been considered by the [PTO]."). See FTC, *supra*, ch. 5, at 26-28. Because there is no dispute in this case over any material fact, there is no need to resolve here any issues regarding the proper standard of proof.

at 36a-40a. The court correctly recognized that the claimed invention simply involved a combination of elements from the prior art, *id.* at 40, and it therefore focused on whether the claimed improvement over the prior art—combining an adjustable gas pedal assembly with an electronic sensor in the manner disclosed in Claim 4—would have been obvious to the person of ordinary skill. Bound by the Federal Circuit's precedents, the district court analyzed the issue through the lens of the teaching-suggestion-motivation test. Nevertheless, its explanation provides ample basis for affirmance under the *Graham* framework. See *id.* at 40a-46a.

The claimed invention is nothing more than a combination of previously known components that "simply arranges old elements with each performing the same function it had been known to perform." *Sakraida*, 425 U.S. at 282. This Court's post-*Graham* decisions indicate that such combinations would have been obvious to a mechanic of ordinary skill in the absence of some additional distinctive factor, such as the creation of a "new or different function," *Anderson's-Black-Rock*, 396 U.S. at 60, a "synergistic result," *id.* at 61, or proof that the prior art "deter[red] any investigation into such a combination," *Adams*, 383 U.S. at 52.[14]

Respondent argued below that the particular placement of the electronic sensor on the adjustable gas pedal assembly's support bracket provided the distinctive inventive feature. See Pet. App. 41a-42a. But as the district court explained, the prior art—specifically the Asano patent, which respondents had not provided to the PTO—revealed the placement of a mechanical throttle control on an adjustable

---

[14] The Court's pre-*Graham* decisions support that presumption as well. See, *e.g.*, *Toledo Pressed Steel Co.* v. *Standard Parts, Inc.*, 307 U.S. 350, 356 (1939); *Lincoln Eng'g Co.* v. *Stewart-Waner Corp.*, 303 U.S. 545, 549 (1938); *Adams* v. *Bellaire Stamping Co.*, 141 U.S. 539, 542 (1891); *Reckendorfer* v. *Faber*, 92 U.S. 347, 357 (1876); *Hailes* v. *Van Wormer*, 87 U.S. (20 Wall.) 353, 368 (1873).

gas pedal assembly's support bracket. See *id.* at 32a-33a; 39a-40a. In addition, the prior art revealed that manufacturers of gas pedal assemblies had adapted their non-adjustable assemblies by employing an electronic sensor in place of a mechanical linkage. See *id.* at 33a-35a, 40a. The district court correctly concluded a person having ordinary skill—in this case, a mechanical engineer familiar with pedal assembly design and presumed to know the prior art—would have recognized the advantage of incorporating an electronic sensor into Asano's adjustable gas pedal assembly and placing the electronic sensor at the very same location as the mechanical linkage. See *id.* at 41a-44a.[15]

In sum, the straightforward application of the *Graham* framework leads to the conclusion that the claimed invention here—a combination of known elements assembled in a manner similar to mechanical devices that performed the same function in the prior art—would have been obvious to a person having ordinary skill in the art. The claimed invention here is at least as obvious as the inventions in *Graham*, see 383 U.S. at 24-26, 32-37, and *Anderson's-Black Rock*, 396 U.S. at

---

[15] Petitioner has supplied an animation that helpfully illustrates that point. See <http://www.demonstratives.com/animations/intellectual_property/ksr/asano.avi> . The court of appeals suggests that Asano merely shows that the electronic throttle control "could have been" mounted in that manner (Pet. App. 15a), citing the observation in *In re Deuel*, 51 F.3d 1552, 1559 (Fed. Cir. 1995), that one cannot demonstrate obviousness by asserting that it was "obvious to try" a course of experimentation that ultimately led to a discovery. Properly applied, however, the "obvious to try" maxim simply recognizes that knowledge of a wide and undifferentiated range of possibly fruitful investigative approaches does not necessarily make obvious the specific solution found through the course of further investigation. See *In re O'Farrell*, 853 F.2d 894, 903 (Fed. Cir. 1988). In this case, the Asano patent provided a clear illustration of how to attach a mechanical throttle control to a pedal assembly support bracket. It required nothing more than ordinary skill to substitute an electronic control for the mechanical one. See Pet. App. 41a-43a.

60-63. The disclosure of that modest innovation does not warrant the award of the extraordinary right to exclude others from practicing the invention.

CONCLUSION

The decision of the court of appeals should be reversed.

Respectfully submitted.

PAUL D. CLEMENT
Solicitor General

PETER D. KEISLER
Assistant Attorney General

THOMAS G. HUNGAR
Deputy Solicitor General

JEFFREY P. MINEAR
Assistant to the Solicitor General

ANTHONY J. STEINMEYER
ANTHONY A. YANG
Attorneys

JAMES A. TOUPIN
General Counsel

JOHN M. WHEALAN
Deputy General Counsel and Solicitor

WILLIAM G. JENKS
ROBERT J. MCMANUS
Associate Solicitors
United States Patent and Trademark Office

AUGUST 2006

5503

Supreme Court, U.S.
FILED
AUG 2 2 2006
OFFICE OF THE CLERK

(11)

No 04-1350

In the Supreme Court of the United States

KSR INTERNATIONAL CO.,
Petitioner,

v.

TELEFLEX INC., *et al.*,
Respondents.

ON WRIT OF CERTIORARI TO THE UNITED STATES COURT OF APPEALS FOR THE FEDERAL CIRCUIT

BRIEF OF AARP, PATIENTS NOT PATENTS, INC., THE PUBLIC PATENT FOUNDATION AS *AMICI CURIAE* IN SUPPORT OF PETITIONER

JEFFREY L. LIGHT
PATIENTS NOT PATENTS, INC.
1712 Eye Street, NW, #915
Washington, DC 20006
(202) 277-6213
Counsel for Amicus Curiae
Patients not Patents, Inc.

DANIEL B. RAVICHER
PUBLIC PATENT FOUNDATION
1375 Broadway, #600
New York, NY 10018
(212) 545-5337
Counsel for Amicus Curiae
Public Patent Foundation

BARBARA A. JONES
Counsel of Record
200 S. Los Robles, #400
Pasadena, CA 91101
(626) 585-2628

SARAH L. LOCK
STACY CANAN
AARP FOUNDATION LITIGATION

MICHAEL SCHUSTER
AARP
601 E Street, NW
Washington, DC 20049
(202) 434-2060
Counsel for Amicus Curiae AARP

TABLE OF CONTENTS

Page

TABLE OF AUTHORITIES ii

INTEREST OF *AMICI CURIAE* 1

SUMMARY OF ARGUMENT 4

ARGUMENT 4

I. THE IMPROPER GRANTING OF PATENTS TO COMBINATION DRUGS DELAYS THE ENTRY OF GENERICS INTO THE MARKETPLACE AT SUBSTANTIAL COSTS TO CONSUMERS 4

II. THE FEDERAL CIRCUIT'S "TEACHING-SUGGESTION-MOTIVATION" CONTRADICTS THIS COURT'S PRECEDENT 8

III. THE FEDERAL CIRCUIT'S "TEACHING-SUGGESTION-MOTIVATION TEST" MODIFIES THE PATENT ACT AND IS AN IMPERMISSIBLE JUDICIAL ENCROACHMENT ON CONGRESS' LEGISLATIVE POWERS 10

CONCLUSION 12

TABLE OF AUTHORITIES

CASES

Anderson's-Black Rock, Inc. v. Pavement Salvage Co., 396 U.S. 57(1969) 9

C.R. Bard, Inc. v. M3 Sys., Inc., 157 F.3d 1340 (Fed. Cir. 1998) 11

Dow Chemical Co. v. Halliburton Oil Well Cementing Co., 324 U.S. 320 (1945) 8

Graham v. John Deere Co., 383 U.S. 1 (1966) 8, 11

Great A & P Tea Co. v. Supermarket Equipment Corp., 340 U.S. 147 (1950) 9

Hotchkiss v. Greenwood, 52 U.S. (11 How.) 248 (1850) 11

Knoll Pharm. Co. v. Teva Pharm. USA, Inc., 367 F.3d 1381 (Fed. Cir. 2004) 9

In re Lee, 277 F.3d 1338 (Fed. Cir. 2002) 10

Lincoln Engineering Co. v. Stewart-Warner Corp., 303 U.S. 545 (1938) 9

McNeil-PPC, Inc. v. L. Perrigo Co., 337 F.3d 1362 (Fed. Cir. 2003) 4, 6, 7

Medtronic, Inc. v. Cardiac Pacemakers, Inc., 721 F.2d 1563 (Fed Cir. 1983) 9, 11

Northwest Airlines, Inc. v. Transport Workers Union of America, AFL-CIO, 451 U.S. 77 (1981) 11

Sakraida v. Ag Pro, Inc., 425 U.S. 273 (1976) 9

Schering-Plough Corp. v. F.T.C.,
402 F.3d 1056 (11th Cir. 2005),
cert. denied, 126 S.Ct. 2929 (2006) 7

Smith v. U.S., 508 U.S. 223 (1993) 11

Stratoflex v. Aeroquip Corp.,
713 F.2d 1530 (Fed. Cir. 1983) 10

Takeda Chemical Industries, Ltd. v. Mylan Laboratories, Inc., 417 F. Supp.2d 341
(S.D.N.Y. 2006) 6

STATUTES

21 U.S.C. § 355(c)(3)(D)(iii)-(iv) 7
35 U.S.C. § 100 *et seq* 8
35 U.S.C. § 101 8
35 U.S.C. § 102 8
35 U.S.C. § 103(a) 2, 4, 11

MISCELLANEOUS

Nicholas G. Barzoukas & Gerard M. Devlin, Jr.,
Teaching Old Drugs New Tricks,
162 N.J.L.J. 157 (Oct. 9, 2000) 5

Clifford Binder et al., AARP Public Policy Institute,
Trends in Manufacturer Prices of Brand Name Prescription Drugs Used by Older Americans
– First Quarter 2006 Update (June 2006),
available at http://assets.aarp. org/rgcenter/
health/dd140_drugprices.pdf 2

Jan Blustein, *Drug Coverage and Drug Purchases by Medicare Beneficiaries with Hypertension*,
19 Health Affairs 219, 228 (2000) 5

Families USA, *Cost Overdose: Growth in Drug Spending for the Elderly, 1992-2010*, at 2 (July 2000), http://www.familiesusa.org/assets/pdfs/drugod852b.pdf 2

P.J. Federico, Operation of the Patent Act of 1790, 18 J. Pat. Off. Soc'y 237 (1936) 7

Generics Transform Statin Outlook, 6/1/06 Med Ad News 12, *available at* 2006 WLNR 11923122 6

Lara J. Glasgow, *Stretching the Limits of Intellectual Property Rights: Has the Pharmaceutical Industry Gone Too Far?*, 41 IDEA 227, 250-251 (2001) 5

Michie I. Hunt, *Prescription Drugs and Intellectual Property Protection: Finding the Right Balance Between Access and Innovation*, Nat'l Inst. for Health Care Mgmt, at 2 (Aug. 2000), *available at* http://www.nihcm.org/prescription.pdf 6, 7

Michael Johnson, *Drug Makers Rush to Fill Heart-Healthy Lifestyle Gap*, Drug Store News, Jan. 17, 2005 6

More Studies Find More Savings if Seniors Use Generic Drugs, Senior Journal (March 3, 2006), http://www.seniorjournal.com/NEWS/MedicareDrugCards/6-03-03-MoreStudiesFind.htm 7

President's Remarks on Prescription Drugs, 38 Weekly Comp. Pres. Doc. 1816-1817 (Oct. 21, 2002), *available at* http://transcripts.cnn.com/TRANSCRIPTS/0210/21/se.01.html) 5

Dana Gelb Safran et al., *Prescription Drug Coverage and Seniors: Findings From A 2003 Survey*, Health Affairs at 157-58 (Apr. 19, 2005), http://content.healthaffairs.org/cgi/reprint/hlthaff.w5.152v1 5

Single-dose 'cocktail' OK'd for U.S. HIV Patients, CNN (July , 2006), http://www.cnn.com/2006/HEALTH/07/12/aids.pill.ap/index.html 6

Jill Weschsler, *Combination Products Raise Manufacturing Challenges: New Fixed-Dose Combination Drugs Aim to Enhance Safety and Efficacy, While Regulators Clear a Path for More Drug-Device Combination Product*, Pharmaceutical Technology, Mar.1, 2005 ..... 5, 6, 10

No. 04-1350

In the Supreme Court of the United States

KSR INTERNATIONAL CO.,
Petitioner,

v.

TELEFLEX INC., *et al.*,
Respondents.

ON WRIT OF CERTIORARI
TO THE UNITED STATES COURT OF APPEALS
FOR THE FEDERAL CIRCUIT

BRIEF OF AARP, PATIENTS NOT PATENTS, INC., THE PUBLIC PATENT FOUNDATION AS *AMICI CURIAE* IN SUPPORT OF PETITIONER

INTEREST OF *AMICI CURIAE*[1/]

AARP is a nonpartisan, nonprofit membership organization of over 36 million persons, age 50 or older, dedicated to addressing the needs and interests of older Americans. AARP seeks through education, advocacy and service to enhance the quality of life for all by promoting independence, dignity, and purpose. In its efforts to promote independence, AARP works to foster the health and economic security of individuals as they age by attempting to ensure the availability of quality and economical health coverage. As the country's largest membership organization, AARP has a long

---

[1/] In accordance with Supreme Court Rule 37.6, AARP, Patients Not Patents and the Public Patent Foundation, state that: (1) no counsel to a party authored this brief, in whole or in part; and (2) no person or entity, other than *amici*, its members and its counsel have made a monetary contribution to the preparation or submission of this brief. The written consents of the parties to the filing of this brief have been filed with the Clerk of the Court pursuant to Supreme Court Rule 37.3.

history of advocating for access to affordable health care and for controlling costs without compromising quality.

A decision in this case will determine whether a claimed invention, which involves a combination of existing technological knowledge, can be "obvious" and therefore unpatentable under 35 U.S.C. § 103(a) without proof of some prior "teaching, suggestion or motivation." The issue is important in the prescription drug arena because combination drugs either have been or are being developed for a multitude of diseases. Combination drugs frequently receive new patents which can eliminate generic entrants from the market for many years, resulting in a higher cost for prescription drugs.

Access to prescription drug treatments and generic medication is particularly important to the older population which, because of its higher rates of chronic and serious health conditions, has the highest rate of prescription drug use. Persons over sixty-five, although only thirteen percent of the population, account for thirty-four percent of all prescriptions dispensed and forty-two cents of every dollar expended on prescription drugs.[2] Prescription drug spending has skyrocketed over the last decade and a half. Since 1990, national health expenditures on prescription drugs have quadrupled from $40 billion to $188 billion in 2004. Since May 2004, AARP's Public Policy Institute has issued a series of reports that closely monitor the pricing actions of the pharmaceutical industry, demonstrating that the annual increases in prices for name brand pharmaceuticals far outstrips the rate of inflation.[3] Access to generic drugs can help ameliorate the harm done by the high costs of prescription drugs, sparking AARP efforts at

---

[2] Families USA, *Cost Overdose: Growth in Drug Spending for the Elderly, 1992-2010*, at 2 (July 2000), http://www.familiesusa.org/assets/pdfs/drugod852b.pdf.

[3] *See, e.g.*, Clifford Binder et al., AARP Public Policy Institute, *Trends in Manufacturer Prices of Brand Name Prescription Drugs Used by Older Americans – First Quarter 2006 Update* (June 2006), *available at* http://assets.aarp.org/rgcenter/health/dd140_drugprices.pdf.

the state and national level to advocate for increased access to lower cost generic versions of drugs.

Patients not Patents ("PNP") is a nonprofit organization committed to reducing intellectual property barriers to affordable healthcare. PNP promotes reform of the patent system through litigation, advocacy and education. A substantial part of PNP's resources is devoted to challenging the validity of patents before the United States Patent & Trademark Office. Almost all of the challenges involve a question of obviousness, many of which also involve the application of the Federal Circuit's teaching-suggestion-motivation test to combination pharmaceuticals.

The Public Patent Foundation ("PUBPAT") is a not-for-profit legal services organization founded in 2003 to represent the public interest in the patent system, and most particularly the public's interests against the harms caused by wrongly issued patents and unsound patent policy. PUBPAT provides the general public and specific persons or entities otherwise deprived of access to the patent system with representation, advocacy and education. It is funded by grants from the Rockefeller Foundation, the Echoing Green Foundation, the Rudolph Steiner Foundation and the Open Society Institute and by private donations from the public.

PUBPAT has argued for sound patent policy before this Court, the United States Court of Appeals for the Federal Circuit, the United States Patent & Trademark Office, the European Union Parliament, and the United States House of Representatives Subcommittee on Courts, the Internet, and Intellectual Property. PUBPAT has also requested that the Patent Office reexamine specifically identified wrongly issued patents causing significant harm to the public. PUBPAT is a leading provider of public service patent legal services and one of the loudest voices advocating for comprehensive patent reform.

PUBPAT has an interest in this matter because the question presented strikes at the heart of one of the most fundamental principles of patent law, the definition of

obviousness. More specifically, PUBPAT has an interest in ensuring that obviousness is maintained as a bar to patentability and that the Federal Circuit's teaching-suggestion-motivation requirement for the combination of known technologies to be obvious is rejected.

SUMMARY OF ARGUMENT

The Federal Circuit's "teaching-suggestion-motivation" test contradicts both the Patent Act and this Court's precedent. The test modifies the Patent Act and therefore is an improper judicial encroachment on the legislative powers of Congress. The Federal Circuit's test requiring that the exact same combination be explicitly suggested previously in order to prove "obviousness" grants unjustified rewards for non-innovative subject matter and prevents competitors from using common knowledge that should be freely available to all. Combination drugs have been developed for a multitude of diseases. Nearly half of the drugs approved by the Food and Drug Administration (FDA) in the 1990s were either new formulations or new combinations of compounds already approved. If the Federal Circuit's decision extending patent protection to non-innovative combinations is permitted to stand, generic drug entries into the marketplace will be delayed and consumers will be forced to pay significantly higher prices which many of them can not afford. The "teaching-suggestion-motivation" test should be rejected in accordance with 35 U.S.C. § 103(a).

I. THE IMPROPER GRANTING OF PATENTS TO COMBINATION DRUGS DELAYS THE ENTRY OF GENERICS INTO THE MARKETPLACE AT SUBSTANTIAL COSTS TO CONSUMERS.

The Federal Circuit itself has recognized that when patents are improperly granted to combination drugs, "competition in the marketplace is foreclosed and the public is forced to pay higher prices." *McNeil-PPC, Inc. v. L. Perrigo Co.*, 337 F.3d 1362, 1368 (Fed. Cir. 2003) (finding the combination drug at issue "obvious" after noting more than

twenty prior articles and publications discussing the combination). The rising costs of prescription drugs have left many older Americans unable to afford necessary medications.[4] There is "specific, empirical evidence that financial barriers compel older Americans to forgo needed drug treatment." Jan Blustein, *Drug Coverage and Drug Purchases by Medicare Beneficiaries with Hypertension*, 19 Health Affairs 219, 228 (2000).

Unfortunately, some combination drug products have delayed generic competition.[5] Nicholas G. Barzoukas & Gerard M. Devlin, Jr., *Teaching Old Drugs New Tricks*, 162 N.J.L.J. 157 (Oct. 9, 2000); Lara J. Glasgow, *Stretching the Limits of Intellectual Property Rights: Has the Pharmaceutical Industry Gone Too Far?*, 41 IDEA 227, 250-251 (2001).

Combination drugs are being developed for a multitude of diseases. Although combination drugs can not be used by all patients, they can offer some patients more convenience and improve compliance. Jill Weschsler, *Combination Products*

---

[4] Research shows that patients' response to the higher drugs costs is to reduce consumption. Dana Gelb Safran et al., *Prescription Drug Coverage and Seniors: Findings From A 2003 Survey*, Health Affairs at 157-58 (Apr. 19, 2005), http://content.healthaffairs.org/cgi/reprint/hlthaff.w5.152v1 (26.3 percent of all adults report not being able to purchase prescription drugs because of their high cost).

[5] The improper use of combination drugs to delay the entry of generic drugs into the market is so pervasive that President Bush commented that "When a drug patent is about to expire one method some companies use is to file a brand new patent based on a minor feature such as ...a specific combination of ingredients unrelated to the drug's effectiveness. In this way the brand name company buys time through repeated delays called automatic stays that frees the status quo as the legal complexities are sorted out. In the meantime, the lower cost generic drug is shut out of the market. These delays have gone on in some cases for 37 months or 53 months or 65 months. This is not how Congress intended the law to work." President's Remarks on Prescription Drugs, 38 Weekly Comp. Pres. Doc. 1816-1817 (Oct. 21, 2002), *available at* http://transcripts.cnn.com/TRANSCRIPTS/0210/21/se.01.html).

Raise Manufacturing Challenges: New Fixed-Dose Combination Drugs Aim to Enhance Safety and Efficacy, While Regulators Clear a Path for More Drug-Device Combination Product, Pharmaceutical Technology, Mar.1, 2005.[6/]

Nearly half of the drugs approved by the FDA in the 1990s were "new formulations" or "new combinations" of compounds already approved. Michie I. Hunt, *Prescription Drugs and Intellectual Property Protection: Finding the Right Balance Between Access and Innovation*, Nat'l Inst. for Health Care Mgmt, at 2 (Aug. 2000), *available at* http://www.nihcm.org/prescription.pdf. Pharmaceutical companies are requesting patents on a wide variety of combination drugs, including but not limited to combinations of antidiarrheal compounds (*McNeil*, 337 F.3d 1362), diabetes medication (*Takeda Chemical Industries, Ltd. v. Mylan Laboratories, Inc.*, 417 F. Supp.2d 341 (S.D.N.Y. 2006) and heart medication. A number of combination medications for coronary heart disease, a leading cause of death in the U.S, are currently being developed. Coronary heart disease will cost the United States an estimated $142.5 billion in 2006. *Generics Transform Statin Outlook*, 6/1/06 Med Ad News 12, *available at* 2006 WLNR 11923122. Combination drugs from Pfizer, AstraZeneca, AtheroGenics Inc., Servier and CV Therapeutics Inc. will account for nineteen percent of total coronary heart disease product sales in 2014, according to analysts from Decision Resources. *Id.* One class of heart medication that has been targeted for combination drugs are statins, which help lower low-density lipoproteins. Under previous guidelines, 36 million people qualified for statin therapy, while upper estimates on actual statin use were just above 15 million. Michael Johnson, *Drug Makers Rush to Fill Heart-Healthy Lifestyle Gap*, Drug Store News, Jan. 17, 2005.

[6/] An example of a new combination drug that will benefit some HIV patients is the recently released AIDS cocktail drug, Atripla. Atripla combines Viread, Emtriva and Sustiva into one dose. It is the first single dose, three-drug pill and costs approximately $1,150.00 for one month of treatment. *Single-dose 'cocktail' OK'd for U.S. HIV Patients*, CNN (July , 2006), http://www.cnn.com/2006/HEALTH/07/12/aids.pill.ap/index.html.

The Federal Circuit's incorrect interpretation of the obviousness standard, as applied in this case, provides incentives for seeking patent rights on obvious extensions of existing technologies and is contrary to the constitutional purpose of the patent system. Over the past two decades, Congress already has enacted a series of laws that have greatly increased the effective patent life enjoyed by brand name prescription drugs. Hunt, *supra*. Additionally, even if a new combination drug is not patented, drug manufacturers automatically receive an additional three year period of "exclusivity" for a combination drug not previously on the market, which precludes competitors from selling the new combination. 21 U.S.C. § 355 (c)(3)(D)(iii)-(iv); *McNeil*, 337 F.3d at 1368; Hunt, *supra* at 5.

The conventional wisdom is that patents for drugs should stimulate mostly breakthrough discoveries that modify treatment or prevention of a disease. Hunt, *supra* at 2. Administrators of the patent system recognized from the outset that patents ought not to be granted for every small advance in an art. *See, e.g.*, P.J. Federico, *Operation of the Patent Act of 1790*, 18 J. Pat. Off. Soc'y 237 (1936).

"By their nature, patents create an environment of exclusion, and consequently, cripple competition." *Schering-Plough Corp. v. F.T.C.*, 402 F.3d 1056, 1065-1066 (11th Cir. 2005), *cert. denied*, 126 S.Ct. 2929 (2006). The improper granting of patents to combination drugs delays the entry of generics into the marketplace at substantial costs to consumers. A Medicare recipient who takes five drugs could save between $2,300 and $5,000 annually if s/he used generic, as opposed to brand name drugs. *More Studies Find More Savings if Seniors Use Generic Drugs*, SeniorJournal (March 3, 2006), http://www.seniorjournal.com/NEWS/MedicareDrugCards/6-03-03-MoreStudiesFind.htm.

II. THE FEDERAL CIRCUIT'S "TEACHING-SUGGESTION-MOTIVATION" CONTRADICTS THIS COURT'S PRECEDENT.

The Patent Act of 1952 provides the current law governing the issuance and validity of patents. *See* 35 U.S.C. § 100 *et seq.* "The Act sets out the conditions of patentability in three sections. An analysis of the structure of these three sections indicates that patentability is dependent upon three explicit conditions: novelty and utility as articulated and defined in section 101 and section 102, and nonobviousness . . . as set out in section 103." *Graham v. John Deere Co.*, 383 U.S. 1, 12 (1966). In *Graham* the Court, using a three-part factual inquiry for addressing obviousness, directed courts to determine (i) the scope and content of the prior art, (ii) the differences between the prior art and the claims and (iii) the level of the ordinary skill in the pertinent art. *Id.* at 17. The Federal Circuit's "suggestion" test essentially ignores the "person having ordinary skill in the art" and looks almost entirely to the contents of the prior art references to demonstrate obviousness.

The Federal Circuit's test further improperly elevates secondary considerations such as commercial success and prior art references to a mandatory consideration. The Court in *Graham* indicated that as an indicia of obviousness, "secondary considerations as commercial success, long felt but unsolved needs, failure of others, etc., *might* be utilized to give light to the circumstances surrounding the origin of the subject matter sought to be patented." *Graham*, 383 U.S. at 17-18 *(emphasis added)*. However this Court has never held that those "secondary considerations" are mandatory. *See e.g., Dow Chemical Co. v. Halliburton Oil Well Cementing Co.*, 324 U.S. 320, 330 (1945) (noting that secondary considerations such as commercial success "are relevant only in a close case where all other proof leaves the question of invention in doubt.").

This Court has held that a patent that "simply arranges old elements with each performing the same function it had been known to perform" is not patentable even if the combination produces "a more striking result than in previous

combinations." *Sakraida v. Ag Pro, Inc.*, 425 U.S. 273, 282 (1976). In a series of cases, this Court has held that the standard for a "combination" patent which aggregates two old elements is whether the alleged invention produces a "new or different function" from the old elements. *Lincoln Engineering Co. v. Stewart-Warner Corp.*, 303 U.S. 545, 549 (1938) ("The mere aggregation of a number of old parts or elements, which in the aggregation, perform or produce no new or different function or operation than that therefore performed or produced by them, is not patentable invention."); *Anderson's-Black Rock, Inc. v. Pavement Salvage Co.*, 396 U.S. 57, 60 (1969) ("The combination of putting the burner together with the other elements in one machine, though perhaps a matter of great convenience, did not produce a 'new or different function,' [citations omitted] within the test of validity of combination patents.") *Accord, Great A & P Tea Co. v. Supermarket Equipment Corp.*, 340 U.S. 147, 151 (1950).

The Federal Circuit has outright dismissed this Court's standard for determining the validity of a combination patent. *See, e.g., Medtronic, Inc. v. Cardiac Pacemakers, Inc*, 721 F.2d 1563, 1566 (Fed Cir. 1983) (holding that there is no statutory basis for identifying "combination" patents and applying a more stringent obviousness test to such patents). By imposing its own "teaching-suggestion-motivation" test instead, the Federal Circuit has permitted claims drawn specifically to what this Court has prohibited—a combination of two old elements with the same function as the individual elements. *See Knoll Pharm. Co. v. Teva Pharm. USA, Inc.*, 367 F.3d 1381 (Fed. Cir. 2004).

In *Knoll*, the Federal Circuit reversed the district court's grant of summary judgment of invalidity based on obviousness. *Id.* The invention was for an analgesic (pain-relieving) composition comprising hydrocodone (Vicodin) and ibuprofen, two well-known analgesics. *Id.* The Federal Circuit acknowledged that such a combination was known in the prior art, but nevertheless reversed the district court's finding of invalidity because no reference specifically taught that combining these two well-known pain killers would produce a combination having pain-killing properties. "Although the

prior art appears to suggest combining an opioid, such as hydrocodone, with various NSAIDs, such as ibuprofen, we conclude, based on the evidence adduced by Knoll, that a genuine factual dispute exists as to the obviousness of the asserted claims which makes summary judgment based on the present record evidence improper. There appears to be no record of evidence of prior art teaching or suggesting the enhanced biomedical effect of the combination of hydrocodone and ibuprofen." *Id.* at 1384.

In dismissing this Court's clear precedent, the Federal Circuit held that the notion of a combination patent is too vague to be a useful legal concept. *Stratoflex v.Aeroquip Corp.*, 713 F.2d 1530,1540 (Fed. Cir. 1983) ("Virtually *all* patents are 'combination patents,' if by that label one intends to describe patents having claims to inventions formed of a combination of elements."). Although obviousness is a conclusion of law, the determination is based on a fact-intensive inquiry. Some fields of art, such as combination therapy, deal almost exclusively with combinations of existing elements.

The field of combination therapy has advanced principally through improvements in the manufacturing and formulation of drugs. Wechsler, *supra*. Examiners at the United States Patent and Trademark Office (PTO) are hamstrung by the Federal Circuit in that they cannot even use "common sense" to make an obviousness rejection. *See e.g.*, *In re Lee*, 277 F.3d 1338, 1345 (Fed. Cir. 2002) ("'Common knowledge and common sense,' even if assumed to derive from the agency's expertise, do not substitute for authority when the law requires authority").

III. THE FEDERAL CIRCUIT'S "TEACHING-SUGGESTION-MOTIVATION TEST" MODIFIES THE PATENT ACT AND IS AN IMPERMISSIBLE JUDICIAL ENCROACHMENT ON CONGRESS' LEGISLATIVE POWERS.

In order to obtain a patent, an invention must be nonobvious in addition to being novel. The test for nonobviousness is an objective inquiry into whether "the

subject matter as a whole would have been obvious at the time the invention was made to a person having ordinary skill in the art to which said subject matter pertains." 35 U.S.C. § 103(a).[7] This provision codified the test that had been used for over a century prior to the passage of the Patent Act. *Hotchkiss v. Greenwood*, 52 U.S. (11 How.) 248 (1850); *see Graham*, 383 U.S. at 17 ("[S]ection [103] was intended merely as a codification of judicial precedents embracing the Hotchkiss condition, with congressional directions that inquiries into the obviousness of the subject matter sought to be patented are a prerequisite to patentability.").

The Federal Circuit has developed a rigid rule that combinations of existing elements are nonobvious unless there is some prior "teaching-suggestion-motivation" to combine the known elements. *See, e.g., C.R. Bard, Inc. v. M3 Sys., Inc.*, 157 F.3d 1340, 1351-1352 (Fed. Cir. 1998) (holding that the teaching-suggestion-motivation test is an "essential evidentiary component of an obviousness holding").

The Federal Circuit's "teaching-suggestion-motivation" test impermissibly modifies the Patent Act and adds requirements that are not included in the plain language of the statute. That test defines a basic element of patent eligibility, thereby impermissibly encroaching on Congress' legislative powers. If Congress had intended to modify the language of Section 103(a), as the respondent suggests, with a teaching-suggestion-motivation test, it could have done so; but Congress did not add such a restriction. *See Smith v. U.S.*, 508 U.S. 223, 229 (1993); *Northwest Airlines, Inc. v. Transport Workers Union of America, AFL-CIO*, 451 U.S. 77, 95 (1981) ("...we

---

[7] Section 103(a) specifically provides that: "A patent may not be obtained though the invention is not identically disclosed or described as set forth in section 102 of this title, if the differences between the subject matter sought to be patented and the prior art are such that the subject matter as a whole would have been obvious at the time the invention was made to a person having ordinary skill in the art to which said subject matter pertains. Patentability shall not be negatived by the manner in which the invention was made." 35 U.S.C. § 103(a).

consistently have emphasized that the federal lawmaking power is vested in the legislative, not the judicial, branch of government...").

CONCLUSION

The Federal Circuit's "teaching-suggestion-motivation test" is not supported by the text of the Patent Act or in any decision of this Court. The test modifies the Patent Act and therefore is an improper judicial encroachment on the legislative powers of Congress. In the pharmaceutical industry, combination drugs that improperly receive new patents can eliminate generic entrants from the market for many years, resulting in higher costs to consumers. The Federal Circuit's decision should be reversed.

August 22, 2006

Respectfully submitted,

Jeffrey L. Light
Patients Not Patents, Inc.
1712 Eye Street, NW, #915
Washington, DC 20006
(202) 277-6213
Counsel for Amicus Curiae
Patients Not Patents, Inc.

Daniel B. Ravicher
Public Patent Foundation
1375 Broadway, #600
New York, NY 10018
(212) 545-5337
Counsel for Amicus Curiae
Public Patent Foundation

Barbara A. Jones
Counsel of Record
AARP Foundation Litigation
200 S. Los Robles, #400
Pasadena, CA 91101
(626) 585-2628

Sarah Lock
Stacy Canan
AARP Foundation Litigation

Michael Schuster
AARP
601 E Street NW
Washington, DC 20049
(202) 434-2060
Counsel for Amicus Curiae
AARP

953

(30)

No. 04-1350

FILED
OCT 16 2006
OFFICE OF THE CLERK
SUPREME COURT, U.S.

In the Supreme Court of the United States

KSR INTERNATIONAL CO.,

Petitioner,

v.

TELEFLEX INC. and TECHNOLOGY HOLDING CO.,

Respondents.

On Writ of Certiorari to the United States Court of Appeals for the Federal Circuit

BRIEF OF ALTITUDE CAPITAL PARTNERS, EXPANSE NETWORKS, INC., INFLEXION POINT STRATEGY, LLC, INTERDIGITAL COMMUNICATIONS CORP., IPOTENTIAL, LLC, OCEAN TOMO, LLC, AND ONSPEC ELECTRONIC INC. AS *AMICI CURIAE* IN SUPPORT OF RESPONDENTS

LAWRENCE S. ROBBINS*
ROY T. ENGLERT, JR.
DANIEL R. WALFISH
Robbins, Russell, Englert, Orseck & Untereiner LLP
1801 K Street, N.W.
Suite 411
Washington, D.C. 20006
(202) 775-4500

* *Counsel of Record*

TABLE OF CONTENTS

Page

TABLE OF AUTHORITIES ii

INTEREST OF THE *AMICI CURIAE* 1

SUMMARY OF ARGUMENT 4

ARGUMENT 7

I. For The Patent System To Promote Investment In Innovation, Determinations Of Patent Validity Must Be Predictable, And Must Not Fall Victim To Hindsight 7

II. The Test Applied Below Reflects An Objective Standard That Achieves Predictability and Avoids Hindsight But Remains Flexible In Practice 14

III. Petitioner's Radical Proposal And Its *Amici*'s Vague Suggestions Offer No Useful Alternative To The Current Standard 23

IV. The Complaints Of Petitioner's *Amici* About Patent Quality Are Poorly Supported And In Any Case Result From Institutional Problems At The Patent Office ... 28

CONCLUSION 30

TABLE OF AUTHORITIES

Page(s)

Cases:

Anderson's-Black Rock, Inc. v. *Pavement Salvage Co.*,
396 U.S. 57 (1969) 12

B.F. Goodrich Co. v. *Aircraft Braking Sys. Corp.*,
72 F.3d 1577 (Fed. Cir. 1996) 16

Bonito Boats, Inc. v. *Thunder Craft Boats, Inc.*,
489 U.S. 141 (1989) 7

Dystar TextilFarben GmbH & Co. Deutschland KG v.
C.H. Patrick Co., 2006 WL 2806466
(Fed Cir. Oct. 3, 2006) 19

eBay Inc. v. *MercExchange, L.L.C.*,
126 S. Ct. 1837 (2006) 3

Eldred v. *Ashcroft*,
537 U.S. 186 (2003) 7

Festo Corp. v. *Shoketsu Kinzoku Kogyo Kabushiki Co.*,
535 U.S. 722 (2002) 7

Graham v. *John Deere Co.*,
383 U.S. 1 (1966) ..... passim

Hotchkiss v. *Greenwood*,
52 U.S. (11 How.) 248 (1850) 12

In re Deakins,
96 F.2d 845 (C.C.P.A. 1938) 20

In re Dembiczak,
175 F.3d 994 (Fed. Cir. 1999) 28

TABLE OF AUTHORITIES—Continued

Page(s)

In re Holt,
162 F.2d 472 (C.C.P.A. 1947) 20

In re Kahn,
441 F.3d 977 (Fed. Cir. 2006) 17

In re Kotzab,
217 F.3d 1365 (Fed. Cir. 2000) 17

In re Leschinsky,
123 F.2d 645 (C.C.P.A. 1941) 20

In re Nilssen,
851 F.2d 1401 (Fed. Cir. 1988) 16, 25

In re Sernaker,
702 F.2d 989 (Fed. Cir. 1983) 16, 20

In re Smith,
118 F.2d 722 (C.C.P.A. 1941) 20

Kansas v. *Marsh*,
126 S. Ct. 2516 (2006) 29

McGinley v. *Franklin Sports, Inc.*,
262 F.3d 1339 (Fed. Cir. 2001) 19, 28

Motorola, Inc. v. *Interdigital Tech. Corp.*,
121 F.3d 1461 (Fed. Cir. 1997) 15, 16

Picard v. *United Aircraft Corp.*,
128 F.2d 632 (2d Cir. 1942) 8, 14

Princeton Biochemicals, Inc. v. *Beckman Coulter, Inc.*,
411 F.3d 1332 (Fed. Cir. 2005) 16

TABLE OF AUTHORITIES—Continued

Page(s)

Reeves Instrument Corp. v. *Beckman Instruments, Inc.*,
444 F.2d 263 (9th Cir. 1971) 24

Reiner v. *I. Leon Co.*,
285 F.2d 501 (2d Cir. 1960) 24

Republic Indus., Inc. v. *Schlage Lock Co.*,
592 F.2d 963 (7th Cir. 1979) 12

Sakraida v. *Ag Pro, Inc.*,
425 U.S. 273 (1976) 12

Sears, Roebuck & Co. v. *Stiffel Co.*,
376 U.S. 225 (1964) 12

SIBIA Neurosciences, Inc. v. *Cadus Pharm. Corp.*,
225 F.3d 1349 (Fed. Cir. 2000) 19

United States v. *Adams*,
383 U.S. 39 (1966) ..... passim

Verizon Commc'ns Inc. v. *Law Offices of Curtis V. Trinko, LLP*, 540 U.S. 398 (2004) 8

Winner Int'l Royalty Corp. v. *Wang*,
202 F.3d 1340 (Fed. Cir. 2000) 15, 28, 29

Statutes and Regulations:

35 U.S.C. § 103 ..... passim

35 U.S.C. § 282 27

37 C.F.R. § 1.104 (2005) 26

TABLE OF AUTHORITIES—Continued

Page(s)

Miscellaneous:

A Market for Ideas, ECONOMIST, Oct. 22, 2005 1

Donald W. Banner, *Foreword* (March 1979), *in* NONOBVIOUSNESS–THE ULTIMATE CONDITION OF PATENTABILITY (John F. Witherspoon ed., 1980) 13

Bruce V. Bigelow, *Patent Payoff*, SAN DIEGO UNION-TRIB., May 14, 2006 3

2 CHISUM ON PATENTS § 5.04 (2005) 20

Don Clark, *Inventors See Promise in Large-Scale Public Patent Auctions*, WALL ST. J., March 9, 2006 2

European Patent Office Guidelines, Part C, ch. IV ... 22, 23

Federal Courts Improvement Act of 1979: Addendum to Hearings Before the Subcomm. on Improvements in Judicial Machinery of the Senate Judiciary Comm., Serial No. 96-24 (1979) 9, 10, 11

Edmund W. Kitch, *The Nature and Function of the Patent System*, 20 J.L. & ECON. 265 (1977) 9

Ronald J. Mann, *Do Patents Facilitate Financing in the Software Industry?*, 83 TEX. L. REV. 961 (2005) 3

Jeff Nesmith, *Patents Pending*, AUSTIN AM.-STATESMAN, Aug. 27, 2006 30

Perspectives on Patents: Post-Grant Review Procedures and Other Litigation Reforms: Hearing Before the Subcomm. on Intell. Prop. of the Senate Comm. on the Judiciary, 109th Cong. (May 23, 2006) (testimony of Nathan P. Myhrvold). 11

TABLE OF AUTHORITIES—Continued

Page(s)

Giles S. Rich, *Escaping the Tyranny of Words–Is Evolution in Legal Thinking Impossible?*, *in* NONOBVIOUSNESS–THE ULTIMATE CONDITION OF PATENTABILITY 3:301 (John F. Witherspoon ed., 1980) 12, 24

Giles S. Rich, *The Relation Between Patent Practices and the Anti-Monopoly Laws*, 24 J. PAT. OFF. SOC'Y 85 (1942) 8

WENDY H. SCHACHT & JOHN R. THOMAS, PATENT REFORM: INNOVATION ISSUES (Congr. Res. Serv. July 15, 2005) 9

David Streitfeld, *Note: This Headline Is Patented*, L.A. TIMES, Feb. 7, 2003 29

SUBCOMM. ON PATENTS, TRADEMARKS, AND COPYRIGHTS, PROPOSALS FOR IMPROVING THE PATENT SYSTEM, S. Doc. No. 85-21 (1st Sess. 1957) 8

The Liquidity of Innovation, ECONOMIST, Oct. 22, 2005 ... 4

U.S. Patent No. 6,368,227 29

U.S. SMALL BUSINESS ADMIN. OFFICE OF ADVOCACY, FREQUENTLY ASKED QUESTIONS (2005), http://www.sba.gov/advo/stats/sbfaq.pdf 9

David E. Wigley, Note, *Evolution of the Concept of Non-obviousness of the Novel Invention: From a Flash of Genius to the Trilogy*, 42 ARIZ. L. REV. 581 (2000) 13

BRIEF OF ALTITUDE CAPITAL PARTNERS, EXPANSE NETWORKS, INC., INFLEXION POINT STRATEGY, LLC, INTERDIGITAL COMMUNICATIONS CORP., IPOTENTIAL, LLC, OCEAN TOMO, LLC, AND ONSPEC ELECTRONIC INC. AS *AMICI CURIAE* IN SUPPORT OF RESPONDENTS

INTEREST OF THE *AMICI CURIAE*[1]

As ideas increasingly become the essential raw material of the American economy, intellectual property rights are becoming an increasingly significant form of asset. See, *e.g.*, *A Market for Ideas*, ECONOMIST, Oct. 22, 2005. The ability to trade such rights – like other forms of property – in order to optimize their utilization is therefore increasingly important. *Amici* are all firms whose stock-in-trade is intellectual property rights and whose livelihood depends on the ready transferability of those rights. Some *amici* take advantage of familiar types of transactions in intellectual property rights, such as licensing. Others are developing new transaction models, such as patent brokerage and intellectual property investment banking. All, however, have a common interest in seeing that settled, reasonably workable standards of patentability are not upset.

InterDigital Communications Corporation develops technology for the wireless communications industry. The firm, founded in 1972 and publicly listed since 1981, employs approximately 240 engineers. It derives much of its revenues

---

[1] All parties have consented to the filing of this brief. The parties' blanket consents have been lodged with the Clerk of the Court. Pursuant to Rule 37.6, *amici curiae* state that no counsel for a party has written this brief in whole or in part and that no person or entity other than the *amici curiae* or their counsel has made a monetary contribution to the preparation or submission of this brief.

from licensing its patents to companies that manufacture cellular telephones and other mobile terminal devices.

OnSpec Electronic Inc., founded in 1989, develops semiconductors and products that enable computers and memory devices to work together. OnSpec's technology has been adopted by many of the world's leading electronics companies. OnSpec has protected its innovations with over two dozen patents, which its corporate family licenses to manufacturers of electronic components.

Expanse Networks, Inc., was founded by a physicist and engineer who works largely as a sole inventor. Expanse Networks has previously developed and sold a set of patents covering targeted television advertising technology and is currently innovating in the area of bioinformatics.

Ocean Tomo, LLC, established in 2003, is a merchant banc for intellectual property. Ocean Tomo, among other services, provides advice on transactions and valuation, and it invests in companies with promising intellectual property to assist them in their commercialization activities. Ocean Tomo publishes a public stock index (AMEX: OTPAT) of companies with especially valuable patents, and earlier this year the firm conducted a live public patent auction. See, *e.g.*, Don Clark, *Inventors See Promise in Large-Scale Public Patent Auctions*, WALL ST. J., March 9, 2006.

Inflexion Point Strategy, LLC is an intellectual property investment bank founded in 2004 by a patent attorney who formerly advised on complex corporate transactions in which intellectual property played a central role. Inflexion Point represents technology companies and private equity firms seeking to buy, sell, or invest in patents, either alone or as a component of a corporate merger, acquisition, or divestiture. An important part of Inflexion Point's business is helping clients to acquire patents for defensive use in preventing or settling infringement claims by competitors.

IPotential, LLC is a patent consultancy and brokerage. Inspired by the field of corporate finance, IPotential was founded in 2003 to serve as an advisor, broker, and negotiator specializing in patent transactions. Its clients are typically individual patent holders, universities, and smaller companies seeking to take advantage of intellectual property assets through the acquisition, sale, and licensing of patents.

Altitude Capital Partners invests in patents as well as the firms that own them. By specializing in the valuation and enforcement of intellectual property rights, Altitude serves, as one commentator has put it, as an intermediary "to exploit the value of patents that cannot be exploited effectively by those that have originally obtained them." Ronald J. Mann, *Do Patents Facilitate Financing in the Software Industry?*, 83 TEX. L. REV. 961, 1024 (2005). Relatedly, Altitude seeks to enter arrangements in which it purchases patents from inventors. For example, Altitude has agreed to give one inventor, a research scientist, an up-front payment for his rights to a stream of royalties that a large corporation had previously agreed to pay the scientist to license his patents on magnetic resonance imaging (MRI) technology. The scientist will use the payment as seed capital for a new innovative venture. The arrangement, which allows each party to focus on what it does best, illustrates how capital and patents can work together in a cycle that enhances innovation by placing technology rights in the hands of those best able to use them.

Each of the undersigned *amici*, therefore, plays an important role in the market for intellectual property rights. Some *amici* use intellectual property rights to protect their inventions, which they then make available to others to commercialize. See, *e.g.*, Bruce V. Bigelow, *Patent Payoff*, SAN DIEGO UNION-TRIB., May 14, 2006 (explaining the importance of licensing programs to technology companies); see also *eBay Inc.* v. *MercExchange, L.L.C.*, 126 S. Ct. 1837, 1840 (2006) ("[S]ome patent holders * * * might reasonably

prefer to license their patents, rather than undertake efforts to secure the financing necessary to bring their works to market themselves."). Others serve as intermediaries, adding liquidity to what has historically been an illiquid market. See, *e.g.*, *The Liquidity of Innovation*, ECONOMIST, Oct. 22, 2005. These *amici*, by contributing ideas and capital, create a robust market for inventions and thus increase incentives to invent.

Amici are interested in this case because they crucially depend on the predictability and objectivity of patentability determinations. As an illustration, a research-and-development venture of the kind typified by OnSpec Electronic will find it more difficult to attract financing for its activities if potential investors cannot evaluate the likelihood that the venture's pending patent applications will be approved or that its issued patents will be enforced. Similarly, a firm like Altitude Capital Partners will be less inclined to back an independent inventor, or will do so only on much less favorable terms that diminish incentives to innovate, if Altitude cannot predict with reasonable confidence whether the inventor's patents will be upheld in court.

Because the proposals urged by petitioner and its *amici* would undermine the predictability and objectivity that are crucial to a healthy market for intellectual property rights, *amici* will explain the significance of those goals, and how the Federal Circuit's precedents achieve them. As the American economy comes to depend increasingly on intellectual rather than physical output, a market is evolving in which highly sophisticated actors buy, sell, invest in, and license intellectual property rights. A departure from settled standards would stymie that evolving market.

SUMMARY OF ARGUMENT

The motivation-to-combine inquiry at issue in this case requires a court or patent examiner who believes that a new combination of old elements is "obvious" to justify that deter-

mination by pointing to something – a teaching, suggestion, or motivation, be it explicit or implicit – that would have prompted the ordinarily skilled artisan to create that combination. Without such prompting, the invention cannot be said to be obvious. The purpose of this inquiry is to ensure that the obviousness determination is based on the application of reason to fact, rather than on pure say-so or hindsight. Petitioner and its *amici* would dispense with this standard and substitute in its place vague or untenable suggestions that have no warrant in precedent or common sense. The result would be to convert a determination currently based on knowable objective factors into one that is arbitrary and susceptible to hindsight. The ultimate result would be a failure to protect numerous deserving inventions, and a corresponding diminishment of the incentives to innovate in this country.

Innovation is the lifeblood of the American economy, and the patent system fosters it by creating incentives for the creation, disclosure, and ultimate commercialization of inventions. The protections afforded by the grant of property rights in inventions enable small entities like the undersigned *amici* to survive, compete, and innovate.

For the system to work properly, however, patentability at the procurement stage and patent validity after issuance must be predictable. If there is no clear understanding of what is and is not patentable, investment in innovation will be chilled, and the ready transfer of technology will be inhibited. In fact, the basic purpose of 35 U.S.C. § 103 was to create "uniformity and definiteness." *Graham* v. *John Deere Co.*, 383 U.S. 1, 17 (1966). To the chagrin of industry, that purpose was undermined by developments that followed this Court's decision in *Graham* and helped prompt the creation of the Federal Circuit in 1982. Also crucial to any regime of patentability is that the determination not be based on hindsight. The government and other *amici* downplay this phenomenon, but it is in the nature

of many important technical advances to appear obvious and even inevitable in retrospect.

The motivation-to-combine standard achieves these crucial goals, and does so by rendering the obviousness determination as objective as reasonably possible. The standard, which is consistent with international norms and rooted in decisions that long predate even Section 103, is precisely the sort of workable refinement that lower courts are supposed to develop in every area of the law. The standard, moreover, has never been as inflexible as petitioner and its *amici* suggest. And even if it were, the rational approach would be not to jettison the standard and start from scratch but rather to emphasize that implicit as well as explicit motivations satisfy the standard. If the existing standard were abandoned in favor of the proposals urged by petitioner and its *amici*, then, to the detriment of American competitiveness, countless deserving inventions would never have been protected, and, in the future, will never be protected. Relatedly, petitioner's *amici*'s proposals would wreak havoc in the business world by calling into question enormous numbers of issued patents and inviting endless litigation over patent validity.

In their quest to make infringement cheaper, petitioner and its *amici* do not offer a tenable alternative to the existing standard. Petitioner's focus on capability, not motivation, to combine has never been the law and is unworkable. Since nearly all inventions are based on new combinations of old elements, petitioner's proposal effectively factors creativity out of the patent laws. Moreover, petitioner's *amici*'s argument that the current standard poses evidentiary problems in certain industries ignores the realities of patent litigation and examination, and in particular the role of expert testimony and the ability of examiners to rely on facts within their knowledge.

Petitioner's *amici* fail to substantiate in any way their allegation that the Federal Circuit standard is responsible for poor patent quality. Two or three cherry-picked examples –

examples that, examined closely, are not even particularly troubling – are hardly evidence of broad systemic problems. The real source of problems with patent quality is the U.S. Patent and Trademark Office ("PTO"), which has been notoriously backlogged, underfunded, understaffed, and overworked. The substantive law governing patentability should not be changed merely to address administrative issues at the PTO. The existing standards, although lambasted by petitioner and its *amici*, have successfully encouraged innovation for decades, and they facilitate precisely the sorts of transactions on which the health of the American economy increasingly depends. This Court should not disturb them.

ARGUMENT

I. For The Patent System To Promote Investment In Innovation, Determinations Of Patent Validity Must Be Predictable, And Must Not Fall Victim To Hindsight

A. Patent systems – U.S. and foreign – promote innovation by creating a set of inter-related incentives. This Court's cases emphasize how the patent system creates incentives to invent and to disclose inventions to the world. *E.g.*, *Eldred* v. *Ashcroft*, 537 U.S. 186, 216 (2003); *Bonito Boats, Inc.* v. *Thunder Craft Boats, Inc.*, 489 U.S. 141, 150-151 (1989). These pre-patent incentives are very real and are illustrated by entities like pharmaceutical companies, professional inventors (such as the founder of *amicus* Expanse Networks), and research-and-development companies (such as *amicus* OnSpec Electronic).

This Court has occasionally mentioned a related but distinct – and, in this case, equally important – set of incentives. See *Festo Corp.* v. *Shoketsu Kinzoku Kogyo Kabushiki Co.*, 535 U.S. 722, 730-731 (2002) (patent "clarity is essential to promote progress, because it enables efficient investment in innovation"). *After the patent has issued* – or in expectation of its issuance – the rights it confers make it possible to attract

investment for the purpose of commercializing the invention claimed by the patent. It is always risky to bring something new to market, and it is the promise of the limited monopoly conferred by the patent grant – the assurance that the fruits of the investment will not be appropriated by anyone who figures out how to copy the product – that makes the investment attractive. See, *e.g.*, *Verizon Commc'ns Inc.* v. *Law Offices of Curtis V. Trinko, LLP*, 540 U.S. 398, 407 (2004) ("The opportunity to charge monopoly prices – at least for a short period – is what attracts 'business acumen' in the first place; it induces risk taking that produces innovation and economic growth."). As Judge Jerome Frank once summed up, referring to a type of competition that is vital to the health of the economy: "The David Co. v. Goliath, Inc. kind of competition is dependent on investment in David Co. – the small new competitor. And few men will invest in such a competitor unless they think it has a potential patent monopoly as a slingshot." *Picard* v. *United Aircraft Corp.*, 128 F.2d 632, 643 (2d Cir. 1942) (concurring opinion).[2]

---

[2] This essential function of the patent system was on the minds of those who drafted the 1952 patent statute and has been presented to Congress both before and since. In 1942, Giles S. Rich – the dean of American patent law for much of the 20th century and one member of the two-person committee that drafted what was to become the 1952 Act – noted that three years earlier the Commissioner of Patents had testified to Congress: "[S]peculative capital will not back new inventions without the patent protection. And in the final analysis this is the crux and the most important thing in the whole patent question." Quoted in Giles S. Rich, *The Relation Between Patent Practices and the Anti-Monopoly Laws*, 24 J. PAT. OFF. SOC'Y 85, 179-180 (1942). See also SUBCOMM. ON PATENTS, TRADEMARKS, AND COPYRIGHTS, PROPOSALS FOR IMPROVING THE PATENT SYSTEM, S. Doc. No. 85-21, at 1 (1st Sess. 1957) (declaring that the patent system "has three great objectives," the second being "to create conditions whereby the venture of funds to finance the hazardous introduction into public use of new devices or processes will be

It is the combination of incentives created by the patent system that allows small entities like a number of the undersigned *amici* to compete in the contemporary American economy, and to foster further innovation. Without protection for their intellectual property, smaller firms would be unable to attract financing and survive. The result would be greatly diminished diversity and therefore less innovation. See, *e.g.*, U.S. SMALL BUSINESS ADMIN. OFFICE OF ADVOCACY, FREQUENTLY ASKED QUESTIONS 1 (2005), http://www.sba.gov/advo/stats/sbfaq.pdf (Small businesses "[p]roduce 13 to 14 times more patents per employee than large patenting firms. These patents are twice as likely as large firm patents to be among the one percent most cited."); WENDY H. SCHACHT & JOHN R. THOMAS, PATENT REFORM: INNOVATION ISSUES 10 (Congr. Res. Serv. July 15, 2005) (describing individuals and small entities as "a significant source of innovative products and services").

The contributions to the commercial marketplace of such smaller firms depend on those firms' ability to form contracts based on their intellectual property rights. Those contributions, moreover, are facilitated by the existence of intermediaries that

---

warranted. This is done by protecting the industrial pioneer for a limited time against the uncontrolled competition of those who have not taken the initial financial risk."); *Federal Courts Improvement Act of 1979: Addendum to Hearings Before the Subcomm. on Improvements in Judicial Machinery of the Senate Comm. on the Judiciary*, Serial No. 96-24, at 67 (1979) [hereinafter *Addendum to 1979 Hearings*] (statement of Harry F. Manbeck, Jr., general patent counsel, General Electric Co.) ("Patents, in my judgment, are a stimulus to the innovative process, which includes not only investment in research and development but also a far greater investment in facilities for producing and distributing the goods."). The scholarly literature takes at least occasional note of this point as well. See, *e.g.*, Edmund W. Kitch, *The Nature and Function of the Patent System*, 20 J.L. & ECON. 265 (1977).

specialize in the valuation, licensing or sale, and, when necessary, enforcement of intellectual property rights. The entire economy thus benefits when the market for intellectual property rights is as liquid and transparent as possible. Each of the undersigned *amici*, therefore, is a living illustration of the proper functioning of the patent system. In different ways, each forms part of a cyclical ecology in which invention is encouraged and commercialization is made possible by the availability of capital in conjunction with the ready transferability of intellectual property rights.

B. For this system to work, however, patent validity must be predictable at every stage. Investment in innovation is chilled when patentability is not predictable. "When decisions are being made [in the board or budget committee room], the gambler's spirit is low and any minor cold water on a request for research" – including uncertainty in the patent laws – "is apt to militate against a favorable research decision."[3] Similarly, without predictability, investors will be less likely to back independent innovators at both the pre-application and post-application stages. See Br. of IBM Corp. in Support of Neither Party 4 (without clarity and predictability respecting patentability, "the public cannot discern the scope of the patent until after all infringement litigation has concluded and will not invest in innovative products that might potentially fall within the patent's scope"). Licensing transactions will become less

---

[3] *Addendum to 1979 Hearings*, *supra*, at 56 (statement of Donald R. Dunner, consultant to the Commission on Revision of the Federal Court Appellate System); see also *id.* at 67-68 (statement of Harry F. Manbeck, Jr., general patent counsel, General Electric Co.) ("The businessman wants to know if a patent is likely to be sustained or overturned and not that his chances are at one percentage level if the trial occurs in one circuit and at another percentage level if it occurs in another circuit. * * * [I]t is important to those who must make * * * investment decisions that we decrease unnecessary uncertainties in the patent system.").

efficient because the parties will have poor information about the value of the right being bargained for.[4]

In short, without predictability as to validity and patentability, innovation would suffer. The only winners would be a small subset of corporations – including the computer industry players supporting petitioner here – that do not depend on the patent system because they are so dominant.[5]

---

[4] See *Addendum to 1979 Hearings*, *supra*, at 65 (statement of Homer O. Blair, patents and licensing vice president, Itek Corp.) ("I spend a lot of my time evaluating patents, what the value of these patents are, whether we can avoid them, and related matters. My management wants to get opinions from me as to what is the value of these patents that we are prepared to pay money to get a license under * * *. It isn't a very good answer to say, well, it depends on where somebody is going to file a patent suit. Patent law * * * should be uniform throughout the country.").

[5] Some of these firms have made a deliberate decision to infringe patents. As the former chief technology officer of one such corporation explained in sworn congressional testimony:

> It works like this. The tech company will hire smart people and put them under huge pressure and lucrative incentives to create state of the art products. They send people to technical conferences, and encourage them to read scientific papers * * *. Yet, they do not allow them to read patents * * *. This is based on a "see no evil, hear no evil" theory that it is better to feign ignorance than to find you're infringing. They do not check their products to see if they infringe anybody else's patents * * *. It's the engineering equivalent of driving at high speed, with the accelerator pedal mashed to the floor, but not looking to see if there are other cars around.

Perspectives on Patents: Post-Grant Review Procedures and Other Litigation Reforms: Hearing Before the Subcomm. on Intell. Prop. of the Senate Comm. on the Judiciary, 109th Cong. (May 23, 2006) (testimony of Nathan P. Myhrvold).

In fact, Congress specifically enacted 35 U.S.C. § 103 for "uniformity and definiteness," *Graham*, 383 U.S. at 15-18, although one would never know that from reading most of the briefs supporting petitioner. The golden era nostalgically evoked by certain *amici* – in which "a flexible test served the system well for the century between *Hotchkiss* [v. *Greenwood*, 52 U.S. (11 How.) 248 (1850),] and the Patent Act," Br. of Time Warner Inc. et al. ("Time Warner") 26 – is sheer fantasy. See *Republic Indus., Inc.* v. *Schlage Lock Co.*, 592 F.2d 963, 967 (7th Cir. 1979) ("The imprecision of the 'invention' standard resulted in an inconsistent and unpredictable body of law because it required that the decision of patentability be based ultimately upon the subjective whims of the reviewing court.").

The whole point of Section 103 was to impose "some stabilizing effect" on what had been a chaotic area of the law. *Graham*, 383 U.S. at 15-17 (quoting and citing Revision Notes and House and Senate Committee reports); see also Giles S. Rich, *Escaping the Tyranny of Words–Is Evolution in Legal Thinking Impossible?*, *in* NONOBVIOUSNESS–THE ULTIMATE CONDITION OF PATENTABILITY 3:301, 3:315 (John F. Witherspoon ed., 1980) [hereinafter NONOBVIOUSNESS] ("Since 1952 there has been * * * a carefully worked out statutory substitute for the rough-hewn stopgap the courts produced which the courts themselves said they could not explain."). As this Court has observed, "the patent system is one in which uniform federal standards are carefully used to promote invention." *Sears, Roebuck & Co.* v. *Stiffel Co.*, 376 U.S. 225, 230 (1964).

The problems of unpredictability are well illustrated by the state of affairs in 1979. By then, obviousness law was once again a vexing mess. Some courts' expansive readings of Justices Brennan's and Douglas's opinions for the Court in, respectively, *Sakraida* v. *Ag Pro, Inc.*, 425 U.S. 273 (1976), and *Anderson's-Black Rock, Inc.* v. *Pavement Salvage Co.*, 396 U.S. 57 (1969), had diminished the hopes for objectivity and consistency raised by *Graham* and *United States* v. *Adams*, 383

U.S. 39 (1966). See, *e.g.*, David E. Wigley, Note, *Evolution of the Concept of Non-obviousness of the Novel Invention: From a Flash of Genius to the Trilogy*, 42 ARIZ. L. REV. 581, 597 (2000) ("After the *Anderson's-Black Rock* and *Ag Pro* decisions, confusion prevailed among the district courts and various circuits * * *."). The imposition by the as-yet-non-existent Federal Circuit of predictability on the obviousness determination was still in the future.

In a Foreword to a book devoted entirely to Section 103, the Commissioner of Patents and Trademarks wrote:

> The judicial gloss and creative embellishments which seem periodically to become associated with the rather clear, two-sentence test provided by Section 103 made the Conference which was the basis for this book a necessity. * * *
>
> And why do I think that the Conference and this book were necessary? My answer is simple; inventors and businessmen will be interested in the patent system only so long as they can reasonably understand the patent laws and rely on their stability. If the standards for patenting vacillate, or if they are applied with substantial differences in interpretation in different parts of our country, or if they are applied and interpreted differently by different institutions of our government, those inventors and businessmen will turn their backs on the patent system. * * * An increase in trade secrecy and a decrease in innovation would be the inevitable result.

Donald W. Banner, *Foreword* (March 1979), *in* NONOBVIOUSNESS, *supra*, at v.

C. The patent system's proper functioning also requires that determinations of validity not fall victim to hindsight. The best ideas are often the most simple and elegant ones, and they appear in retrospect to have been not only obvious all along but inevitable. Science and technology both advance in this way. As Judge Frank once remarked about a particular plaintiff's

patented lubricating and cooling system: "His device, once disclosed, seems obvious and simple. But that is the nature of most important creative ideas. Once we know of them, it seems as if we must always have done so. Science endeavors to move in the direction of simplicity. (* * * We increase knowledge importantly, so to speak, by shaving old ideas with Occam's razor.)" *Picard*, 128 F.2d at 638 (concurring opinion). See also Br. of Ford Motor Co. & DaimlerChrysler Corp. in Support of Neither Party ("Ford Br.") 22 ("[I]nnovation in the automobile industry, as in other industries involving large-scale commercial manufacturing, often results from incremental improvements that appear in retrospect to be almost inevitable.").[6]

It is most assuredly in the national interest to reward the creation and disclosure of, and establish the right conditions for commercializing, inventions obvious only in hindsight. Such inventions – ones that by definition a person of ordinary skill would have been capable of creating, but not motivated to create – would be less likely to become a reality without the incentives created by the patent grant.

II. The Test Applied Below Reflects An Objective Standard That Achieves Predictability and Avoids Hindsight But Remains Flexible In Practice

A. The crucial features of a test for obviousness – predictability, and the avoidance of hindsight – require an objective standard under which reason is applied to facts. It is not an accident that, under *Graham*, the Section 103 inquiry is based

---

[6] Ford Motor Co. and DaimlerChrysler Corp. come quite close to endorsing existing doctrine without actually taking a position on the outcome of the present case. The third of the "Big Three" automakers – General Motors Corp. ("GM") – has joined an *amicus* brief that is closer to petitioner's position, but, as that brief indicates, part of GM's interest in this case stems from the fact that the present lawsuit accuses pedal assemblies supplied to GM for use in its vehicles. See Br. of Cisco Systems Inc., GM, et al. ("Cisco") 2; Pet App. 23a.

on "factual inquiries," 383 U.S. at 17. As long as the validity determination must be based on actual *evidence*, its results will be basically predictable to those with knowledge in the art. By contrast, the results will be unpredictable when an examiner or court can simply assert obviousness based on a subjective impression or fiat without *anything* in the record to suggest a *reason* to adapt prior art.

The purpose of the motivation-to-combine standard applied below is simply to require that a determination that a combination of known elements is obvious be justified with reference to specific facts that motivate (either explicitly or implicitly) the combination. This insistence rigorously avoids hindsight, and makes it possible to predict with sufficient confidence whether a patent application will be denied or an obviousness challenge will be upheld in court. The objective nature of the inquiry, moreover, permits the applicant and the examiner to have meaningful conversations about the application, just as it permits prospective patent licensors and licensees, or buyers and sellers, to have meaningful discussions about validity.

1. The standard is far more flexible than the government and other *amici* suggest. Contrary to petitioner's caricature, the Federal Circuit has held repeatedly and practically since its inception that the motivation does not need to be an explicit statement and that even an *implicit* teaching, suggestion, or motivation will suffice.[7] The government brushes this point

---

[7] *E.g.*, *Winner Int'l Royalty Corp.* v. *Wang*, 202 F.3d 1340, 1348 & n.6 (Fed. Cir. 2000) ("[A] reference need not expressly teach that the disclosure contained therein should be combined with another * * * [T]he district court misstated our case law on the test for the 'motivation to combine' issue when it stated that 'there must have been some *explicit* teaching or suggestion in the art to motivate one of even ordinary skill to combine such elements * * *.'"); *Motorola, Inc.* v. *Interdigital Tech. Corp.*, 121 F.3d 1461, 1472 (Fed. Cir. 1997) ("[T]here is no requirement that the prior art contain an express suggestion to combine known elements to achieve the claimed

aside, asserting with very little in the way of citation that "the test has often proved difficult to satisfy by 'implicit' means." U.S. Merits-Stage Br. ("U.S. Br.") 20. In truth, however, throughout its history the Federal Circuit has not hesitated to uphold obviousness determinations where the suggestion was only implicit.[8] The government's characterization of a "rigid

---

invention. Rather, the suggestion to combine may come *from* the prior art, as filtered through the knowledge of one skilled in the art."); *In re Nilssen*, 851 F.2d 1401, 1403 (Fed. Cir. 1988) ("[F]or the purpose of combining references, those references need not explicitly suggest combining teachings, much less specific references."); *In re Sernaker*, 702 F.2d 989, 995 (Fed. Cir. 1983) ("[I]t was not necessary that the prior art suggest expressly or in so many words, the 'changes or possible improvements' the inventor made. It was only necessary that he apply 'knowledge clearly present in the prior art.'").

[8] See, *e.g.*, *Princeton Biochemicals, Inc.* v. *Beckman Coulter, Inc.*, 411 F.3d 1332, 1338-1339 (Fed. Cir. 2005) (upholding obviousness determination where motivation to combine came from "the knowledge of those skilled in the art" and "the nature of the problem," as established by expert testimony); *Motorola, Inc.*, 121 F.3d at 1472 (upholding verdict of obviousness despite lack of express suggestion because there was evidence from which the jury "could have found a suggestion to combine the various references," including prior art references that "were related and involved similar problems" and detailed expert testimony regarding "the teachings of each reference and the motivations that one skilled in the art might have to combine the various references"); *B.F. Goodrich Co.* v. *Aircraft Braking Sys. Corp.*, 72 F.3d 1577, 1583 (Fed. Cir. 1996) (upholding determination of obviousness where suggestion was established in part by expert testimony regarding knowledge of those in the art); *Nilssen*, 851 F.2d at 1403-1404 (affirming PTO board's determination that "it would have been obvious to one of ordinary skill in the art to use the threshold signal produced in [one prior art] device to actuate a cutoff switch to render the inverter inoperative as taught by [another reference]").

rule" and "inflexible constraints," U.S. Br. 15, 17, is unfair and inaccurate.

The government further contends that an implicit teaching, suggestion, or motivation "would add nothing meaningful to the *Graham* framework." U.S. Br. 20. The government is wrong. "Whether the Board relies on an express or an implicit showing, it must provide particular findings related thereto." *In re Kotzab*, 217 F.3d 1365, 1370 (Fed. Cir. 2000). Either way, the requirement of such findings takes the determination out of the realm of say-so and imposes precisely what the government's vague proposals would avoid, which is the discipline of reasoned decisionmaking. And it is that discipline – the requirement that the PTO (or a court) furnish "some rationale, articulation, or reasoned basis to explain" a conclusion that a combination of known elements was obvious all along – that "helps ensure predictable patentability determinations." *In re Kahn*, 441 F.3d 977, 987 (Fed. Cir. 2006) (Linn, J.). The government's complaint about a supposedly "stringent requirement that *specific* evidence be introduced," U.S. Br. 20 (emphasis in original), is just a lament by an overwhelmed, understaffed agency about the burdens of complying with the rule of law.

The Federal Circuit standard is a fair balance between the need for an objective analytical framework and the need for flexibility. This Court should not disturb the standard. If, however, the Court concludes that there is any merit to the criticisms leveled by petitioner and its *amici* – and in our view it should not – the solution is not to jettison the standard, but rather to emphasize that courts and the PTO should look to implicit as well as explicit motivations.

2. In urging an entirely subjective standard, the government and other *amici* downplay, as they must, the significance of the hindsight problem. "Retrospective analysis," the government says, "is not unique to patent law, but regularly arises in a wide variety of contexts," U.S. Br. 21. The government and other

amici have missed the point. It is not simply that the obviousness analysis is retrospective; it is that the very existence of the invention changes the cognitive landscape by creating the appearance – but only in hindsight – that an innovation was merely an uncreative assembly of old elements.

The examples of other "retrospective analysis" that the United States and other *amici* furnish are not analogous. Knowledge that police found contraband after a search, for example, see U.S. Br. 21, can easily be set aside by one who has experience in legal reasoning and whose task is to apply precedents and common human experience. Furthermore, the physical existence of contraband, in contrast to the creation of an idea, is never in doubt. By contrast, for a court or jury that in all likelihood is first exposed to a particular technology in the very litigation before it, and must place itself in the position of one "having ordinary skill in the art," 35 U.S.C. § 103(a), trying to set aside knowledge that did not exist before the invention was brought to life is immensely more difficult. It is an exercise fraught with peril unless anchored in *something* in the prior art bearing on what any skilled artisan *would have* – not could have – thought of.

This very case illustrates the issue. Once Engelgau's solution to the mechanical problems solved by his patent was known, it was easy for petitioner to characterize the invention as nothing more than sticking an electronic sensor together with a known adjustable pedal assembly. But it is not at all self-evident from the patent, the record, or the computer simulation furnished by petitioner that an automotive mechanical engineer would have seen at the time of Engelgau's invention that his particular arrangement of parts – which, once the invention is realized, can be simplistically and reductively described as "Asano plus sensor" – was an obvious thing to do. The Federal

Circuit was thus hardly extreme in vacating the district court's grant of summary judgment.[9]

3. The motivation-to-combine standard is just the type of workable refinement of a concise statute and high court case law that lower courts develop and apply every day in every area of the law. Indeed, as the United States and other *amici* supporting petitioner acknowledge, *Graham* itself contemplated that its "framework might be refined based on the insights gained through experience." U.S. Br. 24 (citing 383 U.S. at 18); see also Cisco Br. 12 (arguing *Graham* is workable if courts apply to factual findings "the principles of law that have been developed, and other principles that will develop over time").

For all the scorn they heap on the Federal Circuit, petitioner and its *amici* have failed to show why the doctrine at issue in this case is not just such a refinement. Indeed, the Federal Circuit has made it crystal clear that "[t]he assessment of whether to combine references" can be conceived of "as a subset of the first *Graham* factor, the scope and content of the prior art," *McGinley* v. *Franklin Sports, Inc.*, 262 F.3d 1339, 1351 (Fed. Cir. 2001); accord *Dystar TextilFarben GmbH & Co. Deutschland KG* v. *C.H. Patrick Co.*, 2006 WL 2806466, at *4 (Fed Cir. Oct. 3, 2006); *SIBIA Neurosciences, Inc.* v. *Cadus Pharm. Corp.*, 225 F.3d 1349, 1356 (Fed. Cir. 2000) ("Determining whether there is a suggestion or motivation to modify a prior art reference is one aspect of determining the scope and content of the prior art * * *.").

Finally, petitioner's caricature obscures the fact that the requirement of a suggestion or motivation to combine references in order to avoid hindsight, far from being some kind of latter-day usurpation by the Federal Circuit, is rooted in decisions that long antedate not only the creation of the Federal Cir-

---

[9] The Federal Circuit did not, as the government incorrectly states, U.S. Br. 22, conclude that there was no motivation in the prior art.

cuit but also *Graham* and the 1952 patent statute. The Court of Customs and Patent Appeals was applying the doctrine as early as 1938:

> [T]he sole issue before us is whether it involved invention to combine the references in the manner set forth in the quoted excerpt from the decision of the Primary Examiner * * *. We have carefully examined the references for a suggestion of appellant's combination and the new and useful results obtained thereby, but have found none. Of course, if the references are examined in the light of appellant's disclosure, the solution of the problem confronting appellant seems simple. *A problem solved is no longer a problem, and one is prone to overlook the fact that it ever existed.*

In re Deakins, 96 F.2d 845, 849 (C.C.P.A. 1938) (emphasis added). Accord *In re Holt*, 162 F.2d 472, 477 (C.C.P.A. 1947); *In re Leschinsky*, 123 F.2d 645, 647 (C.C.P.A. 1941); *In re Smith*, 118 F.2d 722, 728 (C.C.P.A. 1941). What the Federal Circuit did, soon after its creation, was simply "adopt[] its predecessor court's suggestion test." 2 CHISUM ON PATENTS § 5.04, at 5-282 (2005) (citing *In re Sernaker*, 702 F.2d 989 (Fed. Cir. 1983)).

B. Innumerable valuable innovations would be unprotected if petitioner and its *amici* had their way.[10] Perhaps the clearest illustration is the patent for an electric battery upheld in *Adams*,

---

[10] Ford and DaimlerChrysler acknowledge this point. See Ford Br. 19-22 ("By the time electric starters became a standard feature * * * it would have been easy to characterize the ultimate innovation as little more than a combination of known parts. Yet denying patent protection for this reason alone would likely have discouraged the huge front-end investment that was required to pursue future innovations in the area.").

a case controlled by, and decided the same day as a companion to, *Graham*.[11]

Adams's invention was "the first practical, water-activated, constant potential battery which could be fabricated and stored indefinitely without any fluid in its cells." 383 U.S. at 43. The battery consisted in substance of (1) a positive electrode made of magnesium, (2) a negative electrode made of cuprous chloride, and (3) water. Each individual element "was well known in the prior art," *id.* at 51. It was plain that anyone *could have* combined the elements the way Adams did. But the prior art

---

[11] Petitioner and some of its *amici* suggest that *Graham* itself is inconsistent with Federal Circuit case law, but they are wrong. First of all, *Graham* is not a case about combining references, and so it is not one in which the motivation-to-combine standard should even come into play. Furthermore, *Graham*'s conclusion as to obviousness of the plow patent was based on several considerations that overrode the need to inquire into a motivation to combine. The "free-flex theory" by which petitioner sought to distinguish his patent from the prior art was never made in the patent office, was shown by Graham's own experts to be "not, in fact, a significant feature in the patent," and was "raised for the first time on appeal." 383 U.S. at 25. Moreover, there was *no* operative distinction between Graham's patent and a prior art reference, let alone nonobvious differences. *Id.* at 26 ("[A]ll of the elements in the [patent at issue] are present in the Glencoe structure. * * * The mere shifting of the wear point to the heel of the * * * hinge plate [in Graham's patent] from the stirrup of Glencoe * * * presents no operative mechanical distinctions, much less nonobvious differences."). As for the *Calmar* sprayer-cap cases decided in the same opinion, this Court explicitly relied on the fact that the patent claims had been limited during prosecution to cover *not* the combination of elements asserted by the patent owner during litigation, but only two narrow features of the sealing arrangement, *each* of which was present in the prior art. 383 U.S. at 32-35. Contrary to petitioner's implication, see Pet. Br. 21, and some *amici*'s incorrect description of the cases, see Br. of Intell. Prop. Law Profs. 10, the motivation-to-combine requirement simply was not at issue.

contained no teaching, suggestion, or motivation to do so, and indeed actively discouraged Adams's combination. *Id.* at 52. Experts did not even believe in the invention when presented with a demonstration of it. *Id.* at 44, 52. Adams's invention would be protected by the Federal Circuit's standard and unprotected by petitioner's proposed standard.

C. Stripping deserving inventions of protection can only damage American competitiveness. Every jurisdiction's patent regime confronts the same challenges and tends to resolve them in similar ways. The European patent regime, in stark contrast to the statements of petitioner and one of its *amici*, see Pet. Br. 50 & n.38; Br. of Business Software Alliance ("BSA") 22, adopts the same general approach as the Federal Circuit.[12] The European Patent Office ("EPO") guidelines specifically state: "[T]he question * * * is whether there is any teaching in the prior art as a whole that *would* (not simply could, but would) have prompted the skilled person * * * to modify or adapt the closest prior art * * *." EPO Guidelines, Part C, ch. IV, § 9.8.3 (emphasis in original). It is therefore difficult to make sense of BSA's declaration that "the EU does *not* impose any require-

---

[12] Petitioner's selective citation (at 50 n.38) of European Patent Office guidelines is a red herring. To be sure, the guidelines distinguish, as petitioner points out, between a patentable "combination of features" and a mere "aggregation of features" that is unpatentable because it lacks a "synergistic effect." But, regardless of whether a "synergistic effect" is truly in practice a prerequisite to patentability in Europe, not even petitioner and most of its *amici* seriously defend the highly questionable position that such an "effect" is or should be a prerequisite in this country. See, *e.g.*, Br. of Intell. Prop. Law Profs. 20 ("[We] do not advocate implementation of a 'synergy test.'"). Nor do they argue that this case can be decided on the basis of a lack of such an "effect." The real issue is that once the European examiners get past "synergistic effect" – as this patent undoubtedly does – they conduct an inquiry that is almost identical to the Federal Circuit's "motivation-to-combine" inquiry.

ment paralleling the Federal Circuit's 'teaching, suggestion, or motivation' rule," BSA Br. 22 (emphasis in original).

European patent law, moreover, also stresses the importance of objectivity. See EPO Guidelines, Part C, ch. IV, § 9.8 ("[I]n order to assess inventive step [*i.e.*, nonobviousness] in *an objective and predictable manner*, the examiner should normally apply the so-called 'problem-and-solution approach.'" (emphasis added)). Relatedly, EPO examiners may consider the same objectively verifiable factors known as "secondary considerations" under *Graham*. *Id.* § 9.10.4 ("Where the invention solves a technical problem which workers in the art have been attempting to solve for a long time, or otherwise fulfills a long-felt need, this may be regarded as an indication of inventive step. Commercial success alone is not to be regarded as indicative of inventive step, but evidence of immediate commercial success when coupled with evidence of a long-felt want is of relevance * * *."). And EPO examiners, like their American counterparts, are taught to beware of hindsight: "Once a new idea has been formulated it can often be shown theoretically how it might be arrived at, starting from something known, by a series of apparently easy steps. The examiner should be wary of ex post facto analysis of this kind." *Id.* § 9.10.2.

III. Petitioner's Radical Proposal And Its *Amici*'s Vague Suggestions Offer No Useful Alternative To The Current Standard

A. Petitioner proposes a standard under which *capability* to combine, not motivation to combine, renders an invention unpatentable. Pet. Br. 16. That has never been the law in this country. Petitioner has invented this standard (which is certainly novel and nonobvious, but not useful) out of whole cloth. None of the cases petitioner cites actually articulates such a standard. See Pet. Br. 25-27. Moreover, it is impossible to reconcile this standard with cases like *Adams*, in which everyone in the art had the *ability* to connect the components as

the inventor did, but nobody was *motivated* to do so and in fact no one did so.

Petitioner's proposed "could have" standard, moreover, makes creativity flatly irrelevant. *Most* inventions – not the rare exceptions – are based on combining prior insights. See, *e.g.*, *Reiner* v. *I. Leon Co.*, 285 F.2d 501, 503 (2d Cir. 1960) (L. Hand, J.) ("substantially every invention is for such a 'combination' [of old elements]: that is to say, it consists of former elements in a new assemblage"); Rich, *Escaping the Tyranny of Words*, *supra*, at 3:319 ("practically all patentable inventions are combinations of old elements"); see also *Reeves Instrument Corp.* v. *Beckman Instruments, Inc.*, 444 F.2d 263, 270 (9th Cir. 1971) ("Carried to its logical conclusion, the argument here would result in a rule to the effect that *A & P* precludes the patenting of virtually every new mechanical or electrical device since the vast majority, if not all, involve * * * construction * * * from old elements."). The "could have" test, under which most such combinations would be obvious, effectively reads out of Section 103 the experience, judgment, and tacit knowledge that give rise to creativity in those of skill in the art.

Indeed, if a court must only ask whether "a person having ordinary skill in an art would have been *capable* of adapting extant technology to achieve a desired result" (Pet. Br. 16), then hindsight coupled with an opportunistic search for prior art to satisfy that lax test will determine the results of obviousness challenges in the defendant's favor. As a result, countless meaningful inventions, which might otherwise have rewarded their inventors and those who invested in the inventive activity, would be left unprotected.

B. Petitioner's *amici* also offer nothing useful in place of the current motivation-to-combine inquiry. If they make any affirmative suggestion at all, it is generally to urge renewed attention to the *Graham* factors, especially the level of ordinary skill in the art. See, *e.g.*, U.S. Br. 25 ("the role of the

hypothetical person of ordinary skill is critical"). But that approach is based on the false premise that the Federal Circuit standard does not already consider the level of ordinary skill and the other *Graham* factors. On the contrary, the Federal Circuit standard is designed to implement, not flout, Section 103 and *Graham*, and it is expressly formulated in terms of the person having ordinary skill. The whole reason for the standard is to establish in an objective way whether a combination of known elements would have been obvious to that hypothetical person at the time of the invention.

In fact, a number of the *amicus* briefs paint a misleading picture of patent litigation by positing a false dichotomy between the prior art and the knowledge of one of ordinary skill in the art. Cisco's brief, for instance, asserts (at 7-8) that "[t]he Federal Circuit has * * * emphasized the prior art over the knowledge of one of ordinary skill in the art." But the latter is inseparable from the former. The hypothetical person of ordinary skill is presumed to know "all prior art in the field of the inventor's endeavor and of prior art solutions for a common problem even if outside that field." *In re Nilssen*, 851 F.2d 1401, 1403 (Fed. Cir. 1988). The question in litigation over the obviousness of a combination of known elements is what the art of record would have suggested to that person. One does not have to reject the Federal Circuit's test to bring about a world in which "[e]xpert witnesses in the art can opine on what ordinarily skilled artisans understand about the art, with reasoning and examples sufficient to support their views." Cisco Br. 12. That is how patent litigation currently proceeds every day. See note 8, *supra*. The Federal Circuit's test commendably *disciplines* judicial thinking about how to distinguish experts' impermissible hindsight from their well-grounded assertions about what would or would not have been obvious to ordinarily skilled artisans, and it is difficult to see how an express departure from that discipline would improve patent litigation.

Relatedly, the software industry's complaint that the lack of a culture of documentation makes it difficult to satisfy the motivation-to-combine standard, see BSA Br. 14-16, is nonsense. As some *amici* point out, "The state of internet art * * * is known to engineers in the field at any given time and can be [inferred] from current products." Time Warner Br. 14. In other words, expert testimony based on current products can be used in litigation to establish the state of the art, *i.e.*, to establish *any* explicit *or implicit* teaching, suggestion, or motivation to combine prior elements in the way the patent does. *Amici* further undercut their own argument when they complain that software "technology moves too quickly for published references to keep up," and use as an example "'open source' code that is constantly modified by its users, who share their innovations under a general public license." *Id.* at 15. "Open source" software is by definition available to the public and therefore readily ascertainable by a trier of fact or a patent examiner as prior art. *Amici* fail to acknowledge as well that modern information technology is making it *easier*, not harder, to archive, catalogue, and search for documentation to satisfy the standard.

Further, *amici*'s complaint that patent examiners cannot always point to an article or patent illustrating "what everybody already knows" is also highly questionable. An examiner may reject claims on the basis of "facts within his or her knowledge," provided "the data [are] as specific as possible," and, when requested by the applicant, supported by affidavit. 37 C.F.R. §§ 1.104(c)(3), (d)(2) (2005). The argument about the difficulty of establishing the state of the art in the software and internet industries is creative, but it is a canard.

C. Petitioner, the United States, and other *amici* are unabashed in their agenda to avoid jury trials and make it easier to obtain summary judgment. But petitioner and its supporters are ignoring two fundamental points: (1) the obviousness conclusion is based on factual determinations, and (2) for better or for worse, material factual disputes are generally resolved by

juries. Summary judgment in our system is granted only when there are no material disputes of fact. To say that the current standard is problematic because it makes it harder to get summary judgment in a given case presupposes that the patent in question is indisputably invalid in the first place. In other words, the argument about summary judgment adds no analytic content to the basic debate over patentability standards.

What petitioner and its supporters are really trying to do is make it cheaper to infringe – whereas *Congress* has mandated that "[a] patent shall be presumed valid," 35 U.S.C. § 282. In pursuit of their agenda, petitioner and its *amici* would diminish predictability by converting a determination that should be based on knowable objective factors – factors whose existence and ascertainability are the basis for any number of out-of-court settlements – into a determination that lends itself to arbitrariness infected by hindsight. Petitioner's and its *amici*'s suggestions would effectively create a presumption of *invalidity* for an enormous number of unexpired patents, altogether undermining the Congressional mandate of § 282..

D. Were this Court to accept them, the standards (or lack of them) opportunistically proposed by petitioner and its *amici* would wreak havoc in the business world. By immediately calling into question any patent issued since approximately 1983, this Court would be inviting endless litigation over patent validity. If Congress eventually agrees that the U.S. patent system is fundamentally broken, it can legislate a change in the obviousness standard, and it has the option to do so on a prospective basis only. This Court, however, is in the business of saying what the law is, not what it should be. The Court is institutionally not well positioned to consider properly, much less guard against, the harms that would ensue from upsetting settled standards.

IV. The Complaints Of Petitioner's *Amici* About Patent Quality Are Poorly Supported And In Any Case Result From Institutional Problems At The Patent Office

A. *Amici*'s basic complaint is that the Federal Circuit's standard results in patents of poor quality. But *amici* have presented no evidence that the motivation-to-combine standard is responsible for rampant issuance or validation of so-called "bad patents." Two or three cherry-picked examples are not evidence that a system is broken. One need not agree with every last application of the Federal Circuit's standard to conclude that the standard itself is basically sound. It is, however, worth noting that none of petitioner's and its *amici*'s examples shows that the motivation-to-combine inquiry is responsible for poor patent quality.

The Halloween trash bag patent, mentioned in at least seven briefs filed in support of petitioner, was *denied* by the PTO at two levels of review. *In re Dembiczak*, 175 F.3d 994, 996 (Fed. Cir. 1999). The Federal Circuit, contrary to the statements of some *amici*, did not order the PTO to grant the patent; it merely held that the PTO had not made the necessary findings for an obviousness rejection. The opinion lays out what the PTO would have had to do to properly reject the patent. In particular, the Federal Circuit explained that, if the arguments made by the Commissioner in the court of appeals regarding a motivation to combine had been made and supported in the patent office, the rejection would have been upheld. *Id.* at 1001. *Amici* thus entirely misdescribe the case when they say that "the Federal Circuit concluded that the trash bag was patentable," Br. of Intel Corp. and Micron Tech., Inc. ("Intel") 8.

The other examples offered by *amici* are even less persuasive. Intel cites (at 8-9) *McGinley* v. *Franklin Sports, Inc.*, 262 F.3d 1339 (Fed. Cir. 2001), in which the Federal Circuit merely deferred to a jury's factual findings. Intel also cites *Winner Int'l Royalty Corp.* v. *Wang*, 202 F.3d 1340 (Fed.

Cir. 2000), which is hardly an open-and-shut case. See *id.* at 1349-1351 (holding that district court did not clearly err when it "found that there was no motivation to combine Johnson with the ratcheting mechanism of Moore because (1) there was no apparent disadvantage to the dead-bolt mechanism of Johnson * * *; and (2) Johnson's written description taught away from the use of Moore").

As for the "Method of Swinging on a Swing" patent mentioned in several briefs, the patentee was a small boy, and the application was a whimsical exercise by his father (see U.S. Patent No. 6,368,227 ("[T]he present invention may be referred to by the present inventor and his sister as 'Tarzan' swinging. The user may even choose to produce a Tarzan-type yell while swinging in the manner described * * *.")), a patent lawyer for 3M Co. who was trying to show his son what he did for a living, David Streitfeld, *Note: This Headline Is Patented*, L.A. TIMES, Feb. 7, 2003. The patent was invalidated on re-examination, which, if it shows anything at all, is not the failure of our system but its (albeit imperfect) success. Cf. *Kansas* v. *Marsh*, 126 S. Ct. 2516, 2536 (2006) (Scalia, J., concurring) ("Reversal of an erroneous conviction on appeal or on habeas, or the pardoning of an innocent condemnee through executive clemency, demonstrates not the failure of the system but its success."). In any case, it is not as if the problem with the swing patent was the Federal Circuit's standard. There is no reason to believe the patent covered patentable subject matter, or was new and useful, let alone nonobvious. More generally, if one combs the bowels of any government agency long enough, one is bound to find more than a few ridiculous decisions. A silly aberration far removed from the facts of this case is not evidence that an entire system is broken.

B. If there is a real problem with patent quality, the source of it is the PTO, not the Federal Circuit's standard. The PTO has a massive backlog, and it is universally acknowledged to be underfunded and understaffed. Examiners have historically

operated under a regime of incentives that rewards them for disposing of applications quickly, not well. Morale is low, and the turnover rate among examiners is 50% in a five-year period. See, *e.g.*, Jeff Nesmith, *Patents Pending*, AUSTIN AM.-STATESMAN, Aug. 27, 2006. In these circumstances, it is not at all surprising that the PTO would make some mistakes in issuing patents. If they see fit, Congress and the Executive could address the problems by giving the PTO additional funding and additional staffing, or mandating a reform of incentive structures. This Court, however, is not in a position to fix problems at the PTO, and ultimately it would be counterproductive to try to address those problems by substituting either an amorphous or a hindsight-driven test for the Federal Circuit's studied handiwork in a corner of patent law that is not the real problem.

Indeed, there is no reason to believe that the PTO would do a better job with any standard other than the Federal Circuit's. To be sure, the approach proposed by petitioner would make summary denials *easier* and infringement cheaper, but for all the reasons discussed in this brief, that does not mean that the patent system and those that rely on it would be any better off.

CONCLUSION

The judgment of the court of appeals should be affirmed.

Respectfully submitted.

LAWRENCE S. ROBBINS*
ROY T. ENGLERT, JR.
DANIEL R. WALFISH
Robbins, Russell, Englert,
Orseck & Untereiner LLP
1801 K Street, N.W.
Suite 411
Washington, D.C. 20006
(202) 775-4500

OCTOBER 2006

* *Counsel of Record*

848 D

(48)

No. 04-1350

FILED
OCT 16 2006
OFFICE OF THE CLERK
SUPREME COURT, U.S.

IN THE
Supreme Court of the United States

KSR INTERNATIONAL CO.,
Petitioner,

v.

TELEFLEX INC. AND TECHNOLOGY HOLDING CO.,
Respondents.

On Writ of Certiorari to the United States Court of Appeals For the Federal Circuit

BRIEF OF THE AMERICAN BAR ASSOCIATION AS *AMICUS CURIAE* SUPPORTING RESPONDENTS

Of Counsel:

MARK T. BANNER
PAUL M. RIVARD
ALLEN F. GARDNER

KAREN J. MATHIS*
President
American Bar Association
321 N. Clark St.
Chicago, IL 60610
(312) 988-5000

* *Counsel of Record*

Counsel for Amicus Curiae

QUESTION PRESENTED

Whether the Federal Circuit has erred in holding that a claimed invention cannot be held "obvious," and thus unpatentable under 35 U.S.C. § 103(a), in the absence of some proven "'teaching, suggestion, or motivation' that would have led a person of ordinary skill in the art to combine the relevant prior art teachings in the manner claimed."

TABLE OF CONTENTS

QUESTION PRESENTED i

TABLE OF AUTHORITIES iv

INTEREST OF THE AMICUS CURIAE 1

SUMMARY OF THE ARGUMENT 2

ARGUMENT 3

I. The Teaching-Suggestion-Motivation Inquiry Is Deeply Rooted in the Law and Has Succeeded in Providing Objectivity and Predictability in Obviousness Determinations 3

A. This Court Has Recognized the Need to Avoid Hindsight and the Need for Objectivity and Predictability in Determining Obviousness 4

B. The Teaching-Suggestion-Motivation Inquiry Is A Useful and Appropriate Method for Determining Patentability While Avoiding Hindsight 5

C. The Teaching-Suggestion-Motivation Inquiry Provides Ample Flexibility to Consider Factors in Addition to Explicit Prior Art Teachings 7

II. Reducing Objectivity and Predictability in Obviousness Determinations Would Burden the Courts, the Patent and Trademark Office, Inventors, Litigants, and the Public as a Whole 8

III. Significant Changes in the Application of the Patentability Standard Should Be Reserved to the Congress 9

CONCLUSION 11

TABLE OF AUTHORITIES

Cases

Alza Corp. v. Mylan Labs., Inc., No. 06-1019 (Fed. Cir. Sept. 6, 2006) 7

Dennison Mfg. Co. v. Panduit Corp., 475 U.S. 809 (1986) 4, 5

Dickinson v. Zurko, 527 U.S. 150 (1999) 9

Graham v. John Deere Co., 383 U.S. 1 (1966) ..... *passim*

In re Beasley, 117 Fed. Appx. 739 (Fed. Cir. 2004) 8

In re Bergel, 292 F.2d 955 (C.C.P.A. 1961) 3

In re Dembiczak, 175 F.3d 994 (Fed. Cir. 1992) 5

In re Demarche, 219 F.2d 952 (C.C.P.A. 1955) 3

In re Fine, 837 F.2d 1071 (Fed. Cir. 1988) 5

In re Gartside, 203 F.3d 1305 (Fed. Cir. 2000) 9

In re Hill, 284 F.2d 955 (C.C.P.A. 1960) 3

In re Imperato, 486 F.2d 585 (C.C.P.A. 1973) 3

In re Kahn, 441 F.3d 977 (Fed. Cir. 2006) 7

In re Kotzab, 217 F.3d 1365 (Fed. Cir. 2000) 7

In re Regel, 526 F.2d 1399 (C.C.P.A. 1975) 3

In re Williams, 223 F.2d 291 (C.C.P.A. 1955)..... 3

McGinley v. Franklin Sports, Inc., 262 F.3d 1339 (Fed. Cir. 2001)..... 6

National Steel Car Ltd. v. Canadian Pacific Railway, Ltd., 357 F.3d 1319 (Fed. Cir. 2004)..... 7

Pro-Mold and Tool Co., Inc. v. Great Lakes Plastics, Inc., 75 F.3d 1568 (Fed. Cir. 1996)..... 7

Ruiz v. A.B. Chance Co., 357 F.3d 1270 (Fed. Cir. 2004)..... 7

Sakraida v. Ag Pro, Inc., 425 U.S. 273 (1976) 8

SIBIA Neurosciences, Inc. v. Cadus Pharmaceutical Corp., 225 F.3d 1349 (Fed. Cir. 2000)..... 5

Statutes

35 U.S.C. § 103 ..... *passim*

Administrative Procedure Act (APA), 5 U.S.C. § 706 9

Other Authorities

FED. TRADE COMM'N, To Promote Innovation: The Proper Balance of Competition and Patent Law & Policy (2003)..... 6, 7

H.R. REP. NO. 97-312, 97th Cong., 1st Sess. (1981)..... 4

Irah H. Donner, *Combating Obviousness Rejections under 35 U.S.C. Section 103*, 6 ALB. L.J. SCI. & TECH. 159 (1996) 6

John B. Sganga, Jr., *Litigating Obviousness: A New Approach for Using Expert Witnesses*, 81 J. PAT. & TRADEMARK OFF. SOC'Y 181 (1999) 6

Joseph P. Meara, Ph.D., Notes & Comments, *Just Who is the Person Having Ordinary Skill in the Art? Patent Law's Mysterious Personage*, 77 WASH. L. REV. 267 (2002) 6

Lee Petherbridge and R. Polk Wagner, *The Federal Circuit and Patentability: An Empirical Assessment of the Law of Obviousness*, The Berkeley Electronic Press, http://lsr.nellco.org/upenn/wps/papers/103 (2006) 10

Manual of Patent Examining Procedure, § 2144.03 (2005) 8

INTEREST OF THE AMICUS CURIAE[1]

The American Bar Association ("ABA"), with more than 413,000 members, is the leading national membership organization of the legal profession. Its members come from each of the fifty states, the District of Columbia, and the U.S. territories. Membership is voluntary and includes attorneys in private practice, government service, corporate law departments, and public interest organizations, as well as legislators, law professors, law students, and non-lawyer associates in related fields.[2] ABA members represent the full spectrum of public and private litigants, including plaintiffs and defendants.

The ABA's Section of Intellectual Property Law ("Section") is the world's largest organization of intellectual property professionals, with approximately 19,000 members including lawyers, associates, and law students. In recognition of the uniqueness of patent law, including the special importance of predictable rules governing patent claims, the ABA established the Section in 1894 as the first ABA section to deal with a special branch of the law. The Section has contributed significantly to the development of the American system for the protection of intellectual property rights. The Section is composed of lawyers of

---

[1] Pursuant to Rule 37.6, *amicus curiae* certifies that no counsel for a party authored this brief in whole or in part and that no person or entity, other than *amicus*, its members, or its counsel, has made a monetary contribution to the preparation or submission of this brief. The parties have filed letters with the Clerk of the Court providing blanket consent to the filing of *amicus* briefs.

[2] Neither this brief nor the decision to file it should be interpreted to reflect the views of any judicial member of the American Bar Association. No inference should be drawn that any member of the Judicial Division Council has participated in the adoption or endorsement of the positions in this brief. This brief was not circulated to any member of the Judicial Division Council prior to filing.

diverse backgrounds who represent patent owners, accused infringers, individual inventors, large and small corporations, universities and research institutions across a wide range of technologies and industries. Many Section members represent such entities and individuals before the U.S. Patent and Trademark Office.

At its 2006 Annual Meeting, the ABA House of Delegates adopted a policy that "supports maintaining a 'teaching, suggestion, or motivation' inquiry with respect to combining elements or features in the prior art in determining obviousness of an invention under 35 U.S.C. § 103."[3]

SUMMARY OF THE ARGUMENT

The requirement that there be a teaching, suggestion, or motivation to combine elements in the prior art is a useful and appropriate way to provide objectivity and avoid hindsight in obviousness determinations. The teaching-suggestion-motivation inquiry is deeply rooted in case law and finds support in this Court's decision in *Graham v. John Deere Co.*, 383 U.S. 1 (1966). The inquiry looks to both the explicit and implicit teachings of the prior art, the explicit and implicit knowledge of the skilled artisan, and the nature of the problem to be solved. The particular manner in which implicit teachings and knowledge may be used in an evidentiary-based analysis, though not developed in the opinion on review, is clearly developed in other Federal Circuit opinions.

Abandoning the teaching-suggestion-motivation inquiry as urged by the Petitioner would significantly weaken the patent system by creating a less objective and less predictable methodology for determining patentability. Such

---

[3] http://www.abanet.org/leadership/2006/annual/DAILY_JOURNAL.pdf.

a result would stifle innovation by effectively disqualifying many new technologies from patent protection and by increasing the time and expense associated with patent procurement. A less objective methodology would also hinder innovation by increasing the frequency and expense and decreasing the predictability of litigation.

Fundamentally changing the method for determining obviousness would have far-reaching economic and technological implications, and could be expected to affect different industries in many different ways. Congress is in a better position to investigate whether fundamental change is needed and decide what, if any, changes should be made. This case presents no reason to depart from longstanding and sound legal precedent. The ABA respectfully submits that the question before this Court should be answered in the negative.

ARGUMENT

I. The Teaching-Suggestion-Motivation Inquiry Is Deeply Rooted in the Law and Has Succeeded in Providing Objectivity and Predictability in Obviousness Determinations.

The requirement that there be some suggestion in the art to combine or modify prior art teachings dates back more than five decades to early decisions of the Court of Customs and Patent Appeals.[4] Numerous subsequent decisions of that court, both before and after *Graham*, firmly established the requirement for a suggestion to combine prior art disclosures.[5] The Federal Circuit, created with a primary

---

[4] *See, e.g., In re Williams*, 223 F.2d 291, 293-94 (C.C.P.A. 1955); *In re Demarche*, 219 F.2d 952, 956 (C.C.P.A. 1955).

[5] *See, e.g., In re Hill*, 284 F.2d 955 (C.C.P.A. 1960); *In re Bergel*, 292 F.2d 955, 956-57 (C.C.P.A. 1961); *In re Imperato*, 486 F.2d 585, 587 (C.C.P.A. 1973); *In re Regel*, 526 F.2d 1399, 1403 n.6 (C.C.P.A. 1975).

purpose of achieving greater uniformity in the application of patentability standards,[6] subsequently developed the teaching-suggestion-motivation inquiry more fully.

A. This Court Has Recognized the Need to Avoid Hindsight and the Need for Objectivity and Predictability in Determining Obviousness.

This Court has recognized that hindsight is not germane to obviousness and must be kept out of the obviousness analysis. *Graham*, 383 U.S. at 36; *Dennison Mfg. Co. v. Panduit Corp.*, 475 U.S. 809, 810 (1986) ("in addressing the question of obviousness a judge must not pick and choose isolated elements from the prior art and combine them so as to yield the invention in question if such a combination would not have been obvious at the time of invention.").

In the *Graham* opinion, this Court established a framework for evaluating obviousness under Section 103. In particular, inquiry is made into three objective factual matters: the scope and content of the prior art, the differences between the prior art and the claimed invention, and the level of skill in the art. This Court also invited scrutiny of "subtests" of nonobviousness, which it called "secondary considerations," including commercial success, long felt but unsolved needs, and the failures of others. Only after all these factors are weighed and evaluated is the court to determine whether the invention as a whole would have been obvious. 383 U.S. at 13-18.

This Court then acknowledged the difficulties in applying the nonobviousness test because:

---

[6] *See* H.R. REP. NO. 97-312, 97th Cong., 1st Sess. at 11 (1981).

> What is obvious is not a question upon which there is likely to be uniformity of thought in every given factual context. The difficulties, however, are comparable to those encountered daily by the courts in such frames of reference as negligence and scienter, *and should be amenable to a case-by-case development.*

383 U.S. at 18 (emphasis added). While the *Graham* framework does not specifically prescribe all relevant factors in the obviousness determination, it looks to objective criteria and provides the basic framework for the analysis. The teaching-suggestion-motivation inquiry, as articulated by the Federal Circuit and one of its predecessor courts, is just the type of "case-by-case development" in the law of obviousness called for in *Graham*. *Id.*

B. The Teaching-Suggestion-Motivation Inquiry Is A Useful and Appropriate Method for Determining Patentability While Avoiding Hindsight.

The *Graham* framework provides useful guidance to address the final and ultimate inquiry of whether an invention would have been obvious. In following this Court's guidance in *Graham* and *Dennison*, and as a safeguard against the "insidious effect of a hindsight syndrome," *In re Fine*, 837 F.2d 1071, 1075 (Fed. Cir. 1988), the Federal Circuit has consistently required a showing of a teaching, suggestion, or motivation to combine elements in the prior art. *See, e.g., In re Dembiczak*, 175 F.3d 994, 999 (Fed. Cir. 1992).

The question of whether there is a teaching, suggestion, or motivation to combine prior art teachings is a component of *Graham*'s inquiry into the scope and content of the prior art. *SIBIA Neurosciences, Inc. v. Cadus Pharmaceutical Corp.*, 225 F.3d 1349, 1356 (Fed. Cir. 2000).

Other *Graham* factors, particularly the level of skill in the art and the differences between the invention and the prior art, also may speak to whether it would have been obvious to combine elements in the prior art. *McGinley v. Franklin Sports, Inc.*, 262 F.3d 1339, 1351 (Fed. Cir. 2001). The teaching-suggestion-motivation inquiry, in short, is an evidentiary-based methodology to ensure that the *Graham* framework is properly followed.

The teaching-suggestion-motivation inquiry has been widely approved of by knowledgeable commentators. The inquiry has been described as a "well-established obviousness guideline"[7] and "an established element in the obviousness determination."[8] One commentator identifies the characteristic objectivity of the teaching-suggestion-motivation inquiry, ensuring "the decision-maker will not substitute her own judgment" for that of the hypothetical person skilled in the art.[9]

In an October 2003 report,[10] the Federal Trade Commission (FTC) likewise "urges" that, in assessing whether it would have been obvious to combine or modify prior art references, consideration should not be limited to "concrete suggestions or motivations" but also include "suggestions implicit from the prior art as a whole, suggestions from the nature of the problem to be solved, and

---

[7] John B. Sganga, Jr., *Litigating Obviousness: A New Approach for Using Expert Witnesses*, 81 J. PAT. & TRADEMARK OFF. SOC'Y 181, 182 (1999).

[8] Irah H. Donner, *Combating Obviousness Rejections under 35 U.S.C. Section 103*, 6 ALB. L.J. SCI. & TECH. 159, 183 (1996).

[9] Joseph P. Meara, Ph.D., Notes & Comments, *Just Who is the Person Having Ordinary Skill in the Art? Patent Law's Mysterious Personage*, 77 WASH. L. REV. 267, 275 (2002).

[10] FED. TRADE COMM'N, *To Promote Innovation: The Proper Balance of Competition and Patent Law & Policy* (2003) at 4 –9 to 4–15.

the ability and knowledge of one of ordinary skill in the art." *Id.* at 4–15.

C. The Teaching-Suggestion-Motivation Inquiry Provides Ample Flexibility to Consider Factors in Addition to Explicit Prior Art Teachings.

In the opinion on review, the Federal Circuit remanded to the district court to make a specific factual finding of the "specific understanding or principle within the knowledge of the skilled artisan that would have motivated one with no knowledge of [the] invention to make the combination." In a subsequent decision, the Federal Circuit elaborated on the point, holding that – consistent with the FTC recommendation – the motivation to combine prior art elements may be found explicitly in the prior art or "may be implicit from the prior art as a whole . . . The test for an implicit showing is what the combined teachings, knowledge of one of ordinary skill in the art, and the nature of the problem to be solved as a whole would have suggested to those of ordinary skill in the art." *In re Kahn*, 441 F.3d 977, 987-88 (Fed. Cir. 2006) (quoting *In re Kotzab*, 217 F.3d 1365, 1370 (Fed. Cir. 2000)); *see also Alza Corp. v. Mylan Labs., Inc.*, No. 06-1019, slip. op. at 5-7 (Fed. Cir. Sept. 6, 2006).

Various other Federal Circuit decisions illustrate the flexibility of the teaching-suggestion-motivation inquiry, as well as the importance of considering implicit evidence in the analysis. *See, e.g., Pro-Mold and Tool Co., Inc. v. Great Lakes Plastics, Inc.*, 75 F.3d 1568, 1573 (Fed. Cir. 1996); *Ruiz v. A.B. Chance Co.*, 357 F.3d 1270, 1276 (Fed. Cir. 2004); *National Steel Car Ltd. v. Canadian Pacific Railway, Ltd.*, 357 F.3d 1319, 1338 (Fed. Cir. 2004). Such a flexible

approach enables a court or patent examiner[11] to evaluate the evidence and properly reach a conclusion of obviousness whenever an inventor's solution to a problem would have been evident to persons skilled in the art, even if the relevant knowledge of the skilled artisan was not reduced to writing.

II. Reducing Objectivity and Predictability in Obviousness Determinations Would Burden the Courts, the Patent and Trademark Office, Inventors, Litigants, and the Public as a Whole.

Members of the bar need predictability to counsel clients in matters involving patent validity. Abandoning the teaching-suggestion-motivation inquiry would result in a more subjective approach with far less certainty, and ultimately would provide less guidance to the bar. If some elusive method not based on evidence were to be substituted for the present inquiry, hundreds of thousands of patents granted under the teaching-suggestion-motivation methodology would be immediately placed under a cloud.

Without a teaching-suggestion-motivation inquiry, the courts, patent examiners, and litigants would be left with little guidance as to the manner in which the *Graham* factors should be weighed when combination issues arise. As the ultimate issue of obviousness is a question of law[12] warranting *de novo* review on appeal, if this Court reverses firmly established precedent, the Federal Circuit could expect a flood of appeals from district courts and from the Patent and Trademark Office. Such an environment also would

---

[11] The Manual of Patent Examining Procedure, § 2144.03, permits patent examiners to take official notice of common knowledge in the art or "well known" prior art. *See, e.g., In re Beasley*, 117 Fed. Appx. 739, 744 (Fed. Cir. 2004).

[12] *Graham*, 383 U.S. at 17; *Sakraida v. Ag Pro, Inc.*, 425 U.S. 273, 280 (1976).

increase the frequency and expense of patent litigation because parties would be hard put to predict how a court would rule on validity.

Because most inventions involve combinations of old elements, appellate review of obviousness rejections made by the Patent and Trademark Office often hinges on the issue of whether it would have been obvious to combine individual prior art elements. This Court has held that evidentiary findings of the Patent and Trademark Office must be reviewed using the standard in the Administrative Procedure Act (APA), 5 U.S.C. § 706. *Dickinson v. Zurko*, 527 U.S. 150, 163 (1999). Under the APA standard of review, there must be substantial evidence to support the factual underpinnings of a rejection under 35 U.S.C. § 103. *In re Gartside*, 203 F.3d 1305, 1319 (Fed. Cir. 2000). Abandoning the teaching-suggestion-motivation inquiry would frustrate appellate review of Patent and Trademark Office decisions because the appellate court would have far less evidentiary basis on which to review the agency's conclusions.

III. Significant Changes in the Application of the Obviousness Standard Should Be Reserved to the Congress.

The application of the obviousness standard by the courts and by the Patent and Trademark Office has profound economic and technological policy implications. The fact that the Congress has not intervened during several decades – decades that have witnessed unprecedented technological advancement – should be taken into consideration by this Court.

Even if this Court considers the patent system to be in need of change, there is no basis to conclude that abandoning the teaching-suggestion-motivation inquiry would be beneficial. The part of the patent system to which the

teaching-suggestions-motivation inquiry applies seems to be working well, and certainly no less well than other parts of the system. A recent study found that the Federal Circuit affirmed lower court decisions featuring a teaching-suggestion-motivation inquiry just as often (65.3%) as it affirmed decisions not featuring the inquiry (65.0%). In the cases featuring the teaching-suggestion-motivation inquiry, a result of obviousness (52.4%) was reached more often than a result of non-obviousness (47.6%).[13]

Congress, rather than the courts, is in the best position to determine whether significant change is warranted in the longstanding methodology for determining obviousness. It is also worth noting that although the teaching-suggestion-motivation inquiry has existed in one form or another for more than 50 years, neither the U.S. Government in general nor the Patent and Trademark Office in particular has ever sought Supreme Court review or statutory modification.

---

[13] Lee Petherbridge and R. Polk Wagner, *The Federal Circuit and Patentability: An Empirical Assessment of the Law of Obviousness*, The Berkeley Electronic Press, http://lsr.nellco.org/upenn/wps/papers/103 at 46 (2006).

CONCLUSION

For the reasons set forth above, the ABA respectfully submits that this Court should affirm the judgment of the United States Court of Appeals for the Federal Circuit.

Respectfully submitted,

Of Counsel:

MARK T. BANNER
PAUL M. RIVARD
ALLEN F. GARDNER

KAREN J. MATHIS*
President
American Bar Association
321 N. Clark St.
Chicago, IL 60610
(312) 988-5000

* *Counsel of Record*

Counsel for Amicus Curiae

952A

No. 04-1350

Supreme Court, U.S.
FILED
OCT 12 2006
OFFICE OF THE CLERK

IN THE

Supreme Court of the United States

KSR INTERNATIONAL CO.,

Petitioner,

—v.—

TELEFLEX INC., and TECHNOLOGY HOLDING CO.,

Respondents.

ON WRIT OF CERTIORARI TO THE UNITED STATES COURT OF APPEALS FOR THE FEDERAL CIRCUIT

BRIEF OF AMERICAN INTELLECTUAL PROPERTY LAW ASSOCIATION AS AMICUS CURIAE SUPPORTING RESPONDENTS

MELVIN C. GARNER
PRESIDENT
AMERICAN INTELLECTUAL PROPERTY LAW ASSOCIATION
241 Eighteenth Street, South
Suite 700
Arlington, VA 22202
(703) 415-0780

JEFFREY I.D. LEWIS
Counsel of Record
MELISSA MANDRGOC
PATTERSON BELKNAP WEBB & TYLER LLP
1133 Avenue of the Americas
New York, NY 10036
(212) 336-2000

Counsel for Amicus Curiae American Intellectual Property Law Association

TABLE OF CONTENTS

Table of Authorities ii

Interest of Amicus Curiae 1

Summary of Argument 3

Argument 7

1. Supreme Court Precedent Requires A Reason To Combine Prior Art 8

   A. The Teaching-Suggestion-Motivation ("TSM") Analysis Adheres To Long-Standing Principles Of This Court 9

   B. Explicit Written Motivation Is Not Required ... 13

   C. The TSM Analysis Applies Established Law ... 16

2. The TSM Analysis Is Vital To The Patent System 16

   A. The Established Standard Prevents Hindsight And Arbitrary Decisions 17

   B. TSM Provides Flexibility 20

   C. Precedent Provides Certainty 23

   D. Petitioner's and Amici's Proposals are Inappropriate 25

Conclusion 29

TABLE OF AUTHORITIES

CASES **Page(s)**

In re Adams, 356 F.2d 998 (CCPA 1966) 13

Alza Corp. v. Mylan Labs., Inc., No. 06-1019, --F.3d-- (Fed. Cir. Sept. 6, 2006) 15

Anderson's Black Rock, Inc. v. Pavement Salvage Co., 396 U.S. 57 (1969) 26, 27

B.F. Goodrich, Co. v. Aircraft Braking Sys. Corp., 72 F.3d 1577 (Fed. Cir. 1996) 14

In re Bergel, 292 F.2d 955 (CCPA 1961) 12, 13

Celotex Corp. v. Catrett, 477 U.S. 317 (1986) 7

Connell v. Sears, Roebuck & Co., 722 F.2d 1542 (Fed. Cir. 1983) 9

Cross Med. Prods., Inc. v. Medtronic Sofamor Danek, Inc., 424 F.3d 1293 (Fed. Cir. 2005) 5, 14

Dann v. Johnston, 425 U.S. 219 (1976) 10, 19

Day v. Fair Haven & Westville Ry. Co., 132 U.S. 98 (1889) 10

In re Dembiczak, 175 F.3d 994 (Fed. Cir. 1999) 14

Dickinson v. Zurko, 527 U.S. 150 (2000) 28

Dystar Textilfarben GmbH, v. C.H. Patrick Co., No. 06-1088, --F.3d -- (Fed. Cir. Oct. 3, 2006) 14, 21

Eldred v. Ashcroft, 537 U.S. 186 (2003) 2

Electric Cable Joint Co. v. Brooklyn Edison Co., 292 U.S. 69 (1934) 10

In re Eli Lilly & Co., 902 F.2d 943 (Fed. Cir. 1990) 20, 22

Expanded Metal Co. v. Bradford, 214 U.S. 366 (1909) 10

Festo Corp. v. Shoketsu Kinzoku Kogyo Kabushiki Co., Ltd., 535 U.S. 722 (2002) 23, 24

In re Gartside, 203 F.3d 1305 (Fed. Cir. 2000) 15, 28

Gillette Co. v. S.C. Johnson & Son, Inc., 919 F.2d 720 (1990) 17

Graham v. John Deere Co., 383 U.S. 1 (1966) ..... *passim*

Hotchkiss v. Greenwood, 52 U.S. 248 (1850) 10

In re Huang, 100 F.3d 135 (Fed. Cir. 1996) 15

In re Johnston, 435 F.3d 1381 (Fed. Cir. 2006) 13, 15

Jones v. Hardy, 727 F.2d 1524 (Fed. Cir. 1984) 19

In re Kahn, 441 F.3d 977 (Fed. Cir. 2006) 9, 15, 20

Lamb-Weston, Inc. v. McCain Foods, Ltd., 78 F.3d 540 (Fed. Cir. 1996) 15, 21

In re Lunsford, 357 F.2d 380 (CCPA 1966) 23

Mast, Foos, & Co. v. Stover Mfg. Co., 177 U.S. 485 (1900) 10

McGinley v. Franklin Sports, Inc., 262 F.3d 1339 (Fed. Cir. 2001) 20

In re McLaughlin, 443 F.2d 1392 (CCPA 1971) 14

McNeil-PPC, Inc. v. L. Perrigo Co., 337 F.3d 1362 (Fed. Cir. 2003) 15

Medical Instrumentation & Diagnostics Corp. v. Elektra AB, 344 F.3d 1205 (Fed. Cir. 2003) 14

In re Mercier, 515 F.2d 1161 (CCPA 1975) 23

Monroe Auto Equip. Co. v. Heckethorn Mfg. & Supply Co., 332 F.2d 406 (6th Cir. 1964) 17

Motorola, Inc. v. Interdigital Tech. Corp., 121 F.3d 1461 (Fed. Cir. 1997) 14

National Steel v. Car, Ltd. v. Canadian Pac. R.R., Ltd., 357 F.3d 1319 (Fed. Cir. 2004) 5

In re Nilssen, 851 F.2d 1401 (Fed. Cir. 1988) 14

In re O'Farell, 853 F.2d 894 (Fed. Cir. 1988) 22

Ormoco Corp. v. Align Tech., Inc, No. 05-1426, --- F.3d--- (Fed. Cir. Aug. 30, 2006) 15

Orthopedic Equip. Co. v. United States, 702 F.2d 1005 (Fed. Cir. 1983) 18

In re Passal, 426 F.2d 828 (CCPA 1970) 12

Plastic Container Corp. v. Continental Plastics, Inc., 607 F.2d 885 (10th Cir. 1979) 26

Princeton Biochemicals, Inc. v. Beckman Coulter, Inc., 411 F.3d 1332 (Fed. Cir. 2005) 15

Pro-Mold & Tool Co., Inc. v. Great Lakes Plastics, Inc., 75 F.3d 1568 (Fed. Cir. 1996) 15

In re Rouffet, 149 F.3d 1350 (Fed. Cir. 1998) 4, 20

Ruiz v. A.B. Chance Co., 357 F.3d 1270 (Fed. Cir. 2004) 13, 15, 20

SIBIA Neurosciences, Inc. v. Cadus Pharm. Corp., 225 F.3d 1349 (Fed. Cir. 2000) 15

Safety Car Heating & Lighting Co. v. General Elec. Co., 155 F.2d 937 (2d Cir. 1946) 8, 20

Sakraida v. Ag Pro, Inc., 424 U.S. 273 (1976) 26, 27

In re Sernaker, 702 F.2d 989 (Fed. Cir. 1983) 14

South Corp. v. United States, 690 F.2d 1368 (1982) 12

Stratoflex, Inc. v. Aeroquip Corp., 713 F.2d 1530 (Fed. Cir. 1983) 28

United States v. Adams, 383 U.S. 39 (1966) 9, 11, 17

In re Vaeck, 947 F.2d 488 (Fed. Cir. 1991) 22

Warner-Jenkinson Co. v. Hilton Davis Chem. Co., 520 U.S. 17 (1997) 23

W.L. Gore & Assocs., Inc. v. Garlock, Inc., 721 F.2d 1540 (Fed. Cir. 1983) 5

CONSTITUTION & STATUTES

U.S. CONST. art. 1, § 8, cl. 8 2

5 U.S.C. § 706(2)(E) 28

35 U.S.C. § 101 ..... 3, 7

35 U.S.C. § 102 ..... 7, 9, 27

35 U.S.C. § 103(a) ..... *passim*

35 U.S.C. § 282 ..... 6, 29

OTHER AUTHORITIES

Tom Arnold & Floyd R. Nation, "Proving Section 103 Nonobviousness" (1978), *in* NON-OBVIOUSNESS – THE ULTIMATE CONDITION OF PATENTABILITY (J.F. Witherspoon ed., Bureau of National Affairs, 1980) 18

Donald W. Banner, Foreword, *in* NON-OBVIOUSNESS – THE ULTIMATE CONDITION OF PATENTABILITY (J.F. Witherspoon ed., Bureau of National Affairs, 1980) 24

Guy Bellamy, The Sinner's Congregation (Secker & Warburg, 1982), *quoted at* http://www.bartleby.com/63/47/4874.html 3

Book of Ecclesiastes, 1:9-10 3

John R. Columbo, Columbo's Hollywood: Wit And Wisdom Of The Movie Makers (Collins 1979), *quoted at* http://www.bartleby.com/66/99/64699.html 3

Federal Trade Commission, "To Promote Innovation: The Proper Balance of Competition and Patent Law and Policy" (Oct. 2003), *available at* http://www.ftc.gov/os/2003/10/innovationrpt.pdf 26

George E. Frost, "Future Considerations – Views of a Corporate Counsel" (1978), *in* NON-OBVIOUSNESS – THE ULTIMATE CONDITION OF PATENTABILITY (J.F. Witherspoon ed., Bureau of National Affairs, 1980) 2

General Accounting Office, Intellectual Property Report, Aug. 2002, *available at* http://www.gao.gov/new.items/d02907.pdf#search=%22General%20accounting%20office%20report%20%22august%202002%22%20%22Intellectual%20Property%22. 26

Alan Greenspan (Statement), *available at* http://www.federalreserve.gov/ BoardDocs/speeches/ 2003/20030404/default.htm 23

http://www.ideafinder.com/guest/archives/wow-duell.htm (quote attributed to Charles H. Duell, U.S. Commissioner of Patents) 4

H.T. Markey, "Why Not the Statute?", 65 J. Pat. Off. Soc'y 331, 333-34 (1983) 4

John Milton, PARADISE LOST, Part VI, l. 478-501 17

Herbert H. Mintz & C. Larry O'Rourke, "The Patentability Standard in Historical Perspective: 'Invention' to Section 103 Nonobviousness" (1977), *in* NON-OBVIOUSNESS –THE ULTIMATE CONDITION OF PATENTABILITY (J.F. Witherspoon ed., Bureau of National Affairs, 1980) 19

National Academy of Sciences, "A Patent System for the 21st Century" (April 19, 2004), *available at* http:// www.nap.edu/books/0309089107/html/ 26

Lee Petherbridge & R. Polk Wagner, "The Federal Circuit and Patentability: An Empirical Assessment of the Law of Obviousness", *available at* http://lsr.nellco.org/upenn/wps/papers/103/. 24

James E. Rogan (Statement), Before the Subcommittee on Courts, the Internet and Intellectual Property, Apr. 3, 2003, on the United States Patent and Trademark-Fee Modernization Act Of 2003, *available at* http://w ww.uspto.gov/web/offices/com/speeches/stratplan200 3apr03rogan.htm) 26

S. Rep. No. 97-275 (1981) 25

Strategemata, Intro. to Book 3 (ca. 84 A.D.), (Loeb ed. transl. 1925), *available at* http://penelope.uchicago. edu/Thayer/E/Roman/Texts/Frontinus/Strategemata/3 *.html 3

INTEREST OF *AMICUS CURIAE*

The American Intellectual Property Law Association (AIPLA) is a voluntary bar association of over 16,000 members who work daily with patents, trademarks, copyrights, trade secrets, and the legal issues that such intellectual property presents.[1] Members include attorneys in private and corporate practice as well as government service, whose work routinely involves intellectual property rights. In the litigation context, AIPLA's members are equally split between plaintiffs and defendants. As part of its central mission, AIPLA is dedicated to encouraging the healthy development of patent law. Accordingly, AIPLA has a vital interest in the issue presented by this case, which will have a far-reaching impact on patent rights.

The question before this Court is whether there must be a reason (*i.e.*, a teaching, suggestion or motivation recognizable by one of ordinary skill in the relevant art) to combine separate prior art teachings before an invention can be deemed unpatentable. This requirement is a necessary part of the nonobviousness standard codified at 35 U.S.C. § 103(a). It prevents use of an invention itself as the template to find individual pieces in the prior art and then declare the invention obvious based on hindsight. (As discussed below, contrary to what this Court has been told,

---

[1] Consents to file this brief from the counsel of record for all parties are on file with the Clerk of the Court pursuant to Supreme Court Rule 37.3(a). This brief was not authored, in whole or in part, by counsel to a party, and no monetary contribution to the preparation or submission of this brief was made by any person or entity other than AIPLA or its counsel. After reasonable investigation, AIPLA believes that no member of its Board or Amicus Committee who voted to prepare this brief on its behalf, or any attorney in the law firm or corporation of such a board or committee member, represents a party with respect to this litigation. Some committee members or attorneys in their respective law firms or corporations may represent entities which have an interest in other matters which may be affected by the outcome of this litigation.

the Federal Circuit has not created a blanket requirement that the reason must be explicitly written in the prior art.) This issue and the statute underlying it are at the heart of the Constitutionally-authorized patent system.[2] With good reason it has been called "probably the most important section in the whole Patent Code."[3]

AIPLA believes that the current, well-defined and evolved analytic framework which looks for a reason – referred to as a teaching, suggestion or motivation ("TSM") – before allowing a combination of prior art to render an invention unpatentable draws upon and articulates the principles found in the decisions of this Court, as discussed *infra*. Those decisions required an identifiable reason to combine separate elements in the prior art. This reason may be found in the prior art itself, or in the general knowledge of one of skill in the art, or by the nature of the problem to be solved. TSM excludes using the patent itself as the reason to combine prior art (an easy temptation for a court or jury). AIPLA believes TSM accords with the statutory requirements and its continued implementation is of vital import to the patent system. Accordingly, although AIPLA has no interest in the ultimate victor in this case, it submits this brief in favor of Respondents to urge this Court to continue requiring a reason before combining prior art to establish obviousness under section 103(a).

---

[2] U.S. CONST. art. 1, § 8, cl. 8 ("The Congress shall have Power ... To promote the Progress of Science and useful Arts, by securing for limited Times to Authors and Inventors the exclusive Right to their respective Writings and Discoveries."). This "clause is both a grant of power and a limitation." *Graham v. John Deere Co*, 383 U.S. 1, 5-6 (1966); *see Eldred v. Ashcroft*, 537 U.S. 186, 212 (2003)(*citing Graham*).

[3] George E. Frost, "Future Considerations – Views of a Corporate Counsel" (1978) *in* NON-OBVIOUSNESS –THE ULTIMATE CONDITION OF PATENTABILITY at 8:101 (J.F. Witherspoon ed., Bureau of National Affairs, 1980) (hereinafter "ULTIMATE CONDITION").

SUMMARY OF ARGUMENT

Title 35, United States Code says anything "new" presumptively is entitled to patent protection if it complies with the other provisions of the patent statutes. *See* 35 U.S.C. § 101. Human nature, however, is to rely on hindsight – declaring any combination obvious using present knowledge and therefore unpatentable.

"Hindsight is an exact science"[4] where the outcome already is known", which as Billy Wilder famously put it "is always twenty-twenty."[5] The difficulties caused by hindsight are not new; they have been recognized from time immemorium. King Solomon wrote in the Bible, at the beginning of *Ecclesiastes*, 1:9-10, that everything new can actually be traced to what came before it:

> *What has been is what will be,*
> *and what has been done is what will be done;*
> *there is nothing new under the sun.*
>
> *Is there a thing of which it is said,*
> *"See, this is new";*
> *It has already been, in the ages before us.*

And no doubt it was this same belief that all things are merely created by combining old parts which led Sextus Julius Frontinus, an engineer and Roman Governor of Britain, to write in the First Century that all weapons of war and siege already had been invented.[6] Clearly this was and

---

[4] Guy Bellamy, The Sinner's Congregation (Secker & Warburg, 1982), *quoted at* http://www.bartleby.com/63/47/4874.html.

[5] John R. Columbo, Columbo's Hollywood: Wit And Wisdom Of The Movie Makers (Collins 1979), *quoted at* http://www.bartleby.com/66/99/64699.html.

[6] *Strategemata*, Intro. to Book 3 (ca 84 A.D.) (Loeb ed. transl. 1925), *available at* http://penelope.uchicago.edu/Thayer/E/Roman/Texts/Frontinus/Strategemata/3*.html ("Laying aside also all considerations of works and engines of war, the invention of which has long since reached its

(footnote continued ...)

is not the case, as the last 2,000 years have demonstrated. It is no less true with patentable inventions.[7]

Patentability does not (and should not) turn on whether the invention can be broken into individual elements found in the prior art, as this will virtually always be the case; it turns on whether one of ordinary skill in the art would have thought it obvious at the time to combine the individual elements in the manner claimed. *See In re Rouffet*, 149 F.3d 1350, 1357 (Fed. Cir. 1998)("If identification of each claimed element in the prior art were sufficient to negate patentability, very few patents would ever issue."). As Chief Judge Howard Markey, the first Chief Judge of the Federal Circuit, explained, "virtually all inventions are 'combinations', and ... every invention is formed of 'old elements' ... Only God works from nothing. Man must work with old elements." H.T. Markey, "Why Not the Statute?", 65 J. Pat. Off. Soc'y 331, 333-34 (1983). It is for this reason that Section 103 requires considering whether one of ordinary skill in the art world have found the invention as a whole obvious, *i.e.*, would that person have had a reason to make the claimed combination?

The conversational, informal analysis that Petitioner and supporting *amici* utilize would only require identification of individual elements in the prior art to show an invention obvious. What they propose is hindsight and gives no insight into whether "the subject matter as a whole would have been obvious at the time the invention was made to a person having ordinary skill in the art." 35 U.S.C.

---

limit, and for the improvement of which I see no further hope in the applied arts...").

[7] There is an apocryphal story, long-doubted as myth, that a Patent Office official in the 1800's advocated closing the Patent Office because everything that could be invented already had been invented. Quote attributed to Charles H. Duell, U. S. Commissioner of Patents *see* http://www.ideafinder.com/guest/archives/wow-duell.htm.

§ 103(a)(emphasis added). The reason the statute relies upon the hypothetical Person Having Ordinary Skill In The Art (some use the acronym "PHOSITA") is to prevent this misapplication of otherwise random elements by combining them based upon nothing more than the inventor's own work. The proposals do nothing more than confirm the existence of the elements without indicating if one of ordinary skill in the art would have combined them. In essence, "the claims [are] used as a frame, and individual, naked parts of separate prior art references [] employed as mosaic to recreate a facsimile of the claimed invention," *W.L. Gore & Assocs., Inc. v. Garlock, Inc.*, 721 F.2d 1540, 1552 (Fed. Cir. 1983), without a reason to do so.

Petitioner and some *amici* supporting reversal misstate the Federal Circuit's TSM analysis, asserting that the Federal Circuit always has required written proof explicitly suggesting the claimed combination.[8] As the analysis evolved, panel decisions occasionally have required a writing – some have argued this was done erroneously, while others argue that these cases are limited to their facts – but it is clear that the Federal Circuit has rejected an explicit, blanket writing requirement: "[T]he motivation to combine need not be found in prior art references, but equally can be found 'in the knowledge generally available to one of ordinary skill in the art.' Evidence of a motivation to combine references need not be in the form of prior art." *Cross Med. Prods., Inc. v. Medtronic Sofamor Danek, Inc.*, 424 F.3d 1293, 1322 (Fed. Cir. 2005); *see also, National Steel v. Car, Ltd. v. Canadian Pac. R.R., Ltd.*, 357 F.3d 1319, 1337-1338 (Fed. Cir. 2004)("The motivation to combine can be located either

---

[8] *E.g.*, Petitioner's Brief at 19; Brief of the Business Software Alliance at 2 ("elevates objective documentation") and 14 ("directing the courts to look only at published materials..."); Brief of AARP et al. at 8 ("Federal Circuit's 'suggestion' test ... looks almost entirely to the contents of the prior art references to demonstrate obviousness").

in a prior art reference, or it can be implicit in the knowledge of one of ordinary skill in the art." (citations omitted)). The approach now employed by the Federal Circuit follows the statute and this Court's decisions.

TSM is a well-established, thoughtfully-analytic framework that provides certainty and uniformity in obviousness determinations while allowing proper flexibility. By requiring a showing of why someone of ordinary skill in the relevant art would think the invention obvious, it functions as a critical evidentiary device that prevents arbitrary decisions driven by hindsight.

Petitioner and its supporting *amici* (notably the Government) seek to eliminate any analytic framework whatsoever or suggest tests to replace the TSM analysis. These tests, however, ignore the substantial risks of hindsight, ignore the statutory language, ignore the roots of TSM analyses, and do not comport with this Court's decisions requiring a reason someone of skill in the art would combine prior art before holding that there are only obvious differences between the patented invention and the prior art as a whole. Further, they improperly shift the evidentiary burden to the patentee by ignoring the statutory presumption that an issued patent is valid (35 U.S.C. § 282). They instead seek to set aside a well-established legal framework that is consistent with precedent and statute for fact-driven, technology-related individualistic reasons. While asserting that the Federal Circuit has departed from *Graham*, they raise the same issues and arguments as the *Graham* Court rejected when those petitioners and *amici* also raised them.[9] As discussed *infra*, these proposals should be

---

[9] *Graham*, 383 U.S. at 19 ("We have been urged to find in § 103 a relaxed standard, supposedly a congressional reaction to the 'increased standard' applied by this Court in its decisions over the last 20 or 30 years. The standard has remained invariable in this Court. Technology, however, has advanced – and with remarkable rapidity in the last 50 years.").

rejected. They are inappropriate and unworkable, particularly in the context of a summary judgment appeal, as here.

In the present case, the Federal Circuit reviewed a grant of summary judgment, where factual disputes must be resolved against the movant. *E.g., Celotex Corp. v. Catrett*, 477 U.S. 317, 322 (1986). The trial court did not make specific findings concerning a key claim element requiring attachment, but instead merely addressed combining elements generally. (*Compare* Appendix 12a and 15a-16a *with* 26a-27a, 34a and 45a). In part because the trial court failed to make a complete obviousness determination to support summary judgment, the Federal Circuit remanded for further proceedings. Appendix 16a-17a. The opinion does not address the ultimate question of obviousness, but remands for failure to meet the standard of proof required on summary judgment. Petitioner still can show obviousness below, if appropriate, and so the remand should be affirmed.

ARGUMENT

In analyzing whether an invention is patently new,[10] Judge Learned Hand eloquently articulated the issue of obviousness:

---

[10] 35 U.S.C. § 101 provides that a person "may obtain a patent" on "any new and useful process, machine, manufacture, or composition of matter." Section 102 provides that "[a] person shall be entitled to a patent unless - (a) the invention was known or used by others in this country, or patented or described in a printed publication in this or a foreign country, before the invention thereof by the applicant for patent..." Both presume entitlement to a patent. Section 103 functions only to limit this entitlement by explaining that "[a] patent may not be obtained though the invention is not identically disclosed or described as set forth in section 102" if it would be obvious to one of skill in the art at the time the invention was made – it does not operate to eviscerate the preceding sections by placing the burden on the patentee to prove entitlement to a patent.

> In appraising an inventor's contribution to the art, ... the most reliable test is to look at the situation before and after it appears. Substantially all inventions are for the combination of old elements; what counts is the selection, out of all their possible permutations, of that new combination which will be serviceable. No objective standard is practicable ...

Safety Car Heating & Lighting Co. v. General Elec. Co., 155 F.2d 937, 939 (2d Cir. 1946)(emphasis added). Determining the reason for "the selection" is what Judge Hand identified as the essence of section 103(a)'s obviousness analysis. *Graham* also recognized that it would take a case-by-case analysis to articulate the parameters for providing a reason to combine. 383 U.S. at 18 ("What is obvious is not a question upon which there is likely to be uniformity of thought in every given factual context. The difficulties, however, are comparable to those encountered daily by the courts in such frames of reference as negligence and scienter and should be amenable to a case-by-case development."). Section 103(a) sets the standard for considering whether to combine prior art. The Federal Circuit has done this in developing the TSM analysis since *Graham*.

1. SUPREME COURT PRECEDENT REQUIRES A REASON TO COMBINE PRIOR ART

Petitioner asserts that requiring a reason to combine prior art is a departure from this Court's precedent, alleging that in more than 150 years of decisions none has held that "a proven 'teaching, suggestion or motivation to combine prior art teachings in the particular manner claimed in a patent'" is necessary for obviousness. Petitioner's Brief at 19. In fact, a careful review shows that this requirement, and the Federal Circuit's implementation of it under the TSM framework, is necessary and consistent with this Court's jurisprudence. It is a flexible standard, but one that requires

identifying a reason why a person of ordinary skill at that time would have combined prior art. Absent this identification, a reviewing court must "infer that the Board [or trial court] used hindsight." *In re Kahn*, 441 F.3d 977, 986 (Fed. Cir. 2006). As set forth below, the TSM analysis is in keeping with this Court's precedent and should be upheld.

A. THE TEACHING-SUGGESTION-MOTIVATION ("TSM") ANALYSIS ADHERES TO LONG-STANDING PRINCIPLES OF THIS COURT

Obviousness is an after-the-fact determination. It asks whether at the time of the invention one of ordinary skill in the art would have thought that the invention as a whole was obvious over what came before it. The question can be easily answered where the prior art explicitly sets forth the combination, providing an anticipation (lack of novelty under section 102), which has been called the "epitome of obviousness." *Connell v. Sears, Roebuck & Co.*, 722 F.2d 1542, 1548 (Fed. Cir. 1983).[11] If the entire invention is not disclosed literally or inherently in a single piece of prior art, however, then section 103(a) applies and the hypothetical analysis of whether one of ordinary skill would have combined separate prior art teachings must be undertaken.

Petitioner asserts that the need for a "suggestion" or "reason" to combine cannot be found in this Court's precedent. In fact, the Court has required a "suggestion" or "reason" in some of its earliest decisions, including:

---

[11] Where a single prior art reference discloses an invention literally or inherently, it is anticipated under 35 U.S.C. § 102 (novelty). This is a separate test of patentability. *United States v. Adams*, 383 U.S. 39, 48 (1966). Section 103 is only reached if "the invention is not identically disclosed or described as set forth in section 102." 35 U.S.C. § 103(a). Unlike the obviousness analysis, for anticipation, there is no reason to inquire into what one of ordinary skill would have hypothetically thought at the time.

- In 1889 this Court held an invention obvious because it "would naturally suggest itself to any mechanic, and that its use in that way is within the range of common knowledge and experience." *Day v. Fair Haven & Westville Ry. Co.*, 132 U.S. 98, 102 (1889)(emphasis added).

- In 1900 the Court looked to whether the claimed invention was "anything more than would have been suggested to an intelligent mechanic" *Mast, Foos, & Co. v. Stover Mfg. Co.*, 177 U.S. 485, 494 (1900) (emphasis added).

- The Court explained in 1909 that "he who first makes the discovery has done more than make the obvious improvement which would suggest itself to a mechanic skilled in the art," and found an invention patentable because "[t]here is nothing in the prior art that suggests the combined operation of the Golding patent in suit." *Expanded Metal Co. v. Bradford*, 214 U.S. 366, 381 (1909)(emphasis added).

- In 1934 this Court held that the addition of an element to an old device was patentable only when "it was the result of invention, not the mere exercise of skill in the calling and not one plainly indicated by the prior art." *Electric Cable Joint Co. v. Brooklyn Edison Co.*, 292 U.S. 69, 79 (1934)(emphasis added).

Section 103(a) did not overrule these holdings. *Graham* explicitly stated that the statute codified this Court's precedent and did not change the standard previously applied.[12]

---

[12] The 1952 Act codified decisions such as *Hotchkiss v. Greenwood*, 52 U.S. 248 (1850), while "plac[ing] emphasis on an inquiry into obviousness." *Graham*, 383 U.S. at 3-4 and 16-17; *see also Dann v. Johnston*, 425 U.S. 219, 225-26 (1976) (same). It did not create a "relaxed standard" for obviousness. "The standard has remained invariable in this Court," and Congress did not change "the general level of patentable invention." *Graham*, 383 U.S. at 17-19.

Moreover, the decision in *Adams*, 383 U.S. 39, a companion case to *Graham*, confirms that there must be a suggestion to combine individual components to arrive at the claimed invention for obviousness.

The patent in *Adams* involved a battery with components well-known in the art. The issue was whether one of ordinary skill in the art would have had reason to combine these components, as claimed, in light of the prior art.

> It begs the question, and overlooks the holding [below], to state merely that magnesium and cuprous chloride were individually known battery components ... the issue is whether bringing them together as taught by Adams was obvious in light of the prior art.

Id. at 50 (emphasis added). *Adams* found that the mere identification of individual elements in the prior art was insufficient to answer the obviousness inquiry. Since there was no reason to bring the individual components together, the Court explained, there was no basis to find the invention would have been obvious to one of ordinary skill in the art:

> Despite the fact that each of the elements ... was well known in the prior art, to combine them as did Adams required that a person reasonably skilled in the prior art must ignore [how the elements were separately used in that art, which] ... when taken together, would we believe, deter any investigation into such combination as is used by Adams.

Id. at 51-52. The origins for requiring a reason why one of ordinary skill would have combined individual elements found in potentially disparate references to arrive at the claimed invention are found both in the statute itself (which considers "the subject matter as a whole") and in this Court's precedent.

The decision in *Graham* also utilized what has been come to be known as *secondary considerations*, or "legal inferences or subtests," to implement the obviousness standards taking into account real world factors. *Graham*, 383 U.S. at 17-18, 36. These include whether the invention was commercially successful, if those in the art had long sought such an invention to solve a recognized need, and if the art taught away from combining prior art to create the claimed invention. They are useful to determine nonobviousness but differ from the TSM analysis, which considers whether there is a reason to combine.

Petitioner and some *amici* characterize the Federal Circuit's TSM analysis as a completely "new" requirement, created by the Federal Circuit in an open rejection of this Court's precedent. *E.g*, Petitioner's Brief at 19. This is incorrect, as shown by decisions of the Federal Circuit and its predecessor, the Court of Custom and Patent Appeals ("CCPA"). Even before *Graham*, in keeping with this Court's decisions the CCPA required a reason to combine prior art disclosures. *E.g., In re Bergel*, 292 F.2d 955, 956-57 (CCPA 1961)("The mere fact that it is possible to find two isolated disclosures which might be combined in such a way to produce a new compound does not necessarily render such production obvious unless the art also contains something to suggest the desirability of the proposed combination.") (emphasis added). After *Graham*, the CCPA inquiry continued to seek a reason why isolated prior art teachings corresponding to each component would have been combined before holding an invention obvious. *In re Passal*, 426 F.2d 828, 831 (CCPA 1970).[13] The CCPA required a

---

[13] The CCPA's decisions are binding precedent on the Federal Circuit. *See South Corp. v. United States*, 690 F.2d 1368 (1982)(*en banc*). The CCPA's patent-related docket focused on appeals from the Patent Office. Accordingly, after *Graham* the CCPA began to articulate a standard that would enable Patent Examiners to determine just what evidence beyond the mere identification of individual elements in the prior art

(footnote continued ...)

reason, a suggestion, to combine prior art disclosures to render the invention as a whole obvious. *In re Adams*, 356 F.2d 998, 1001-1002 (CCPA 1966).

At different times, the CCPA and then the Federal Circuit have emphasized one of the synonyms ("suggest" or "teach" or "motivate") more than another, but the use of these essentially interchangeable terms clearly invokes the same analysis for determining whether there was a reason to combine. Under any name, however, the CCPA, and later the Federal Circuit, has consistently applied the principles embodied in section 103(a) and this Court's precedent.

B. EXPLICIT WRITTEN MOTIVATION IS NOT REQUIRED

Petitioner and supporting *amici* maintain that the TSM analysis imposes a virtually insurmountable burden, requiring an explicit, written motivation specifically proposing the precise combination of prior art that leads to the claimed invention. *See* note 8, *supra*. It has no such requirement. The Federal Circuit explicitly has recognized that a written motivation is rare. *In re Johnston*, 435 F.3d 1381, 1385 (Fed. Cir. 2006) ("An explicit teaching that identifies and selects elements from different sources and states that they should be combined in the same way as the invention at issue, is rarely found in the prior art.") The TSM approach "does not provide a rule of law that an express, written motivation to combine must appear in prior art references before a finding of obviousness." *Ruiz v. A.B. Chance Co.*, 357 F.3d 1270, 1276 (Fed. Cir. 2004). The Federal Circuit has rejected such a rule:

> [Applicant] urges this court to establish ... [that] references may not be combined ... absent an

---

distinguishes a nonobvious invention from an obvious one. *See, e.g., Bergel*, 292 F.2d at 956-57; *In re Adams*, 356 F.2d at 1001-1002.

> express suggestion in one prior art reference to look to another specific reference. We reject that recommendation as contrary to our precedent which holds that for the purpose of combining references, those references need not explicitly suggest combining teachings, much less specific references.

In re Nilssen, 851 F.2d 1401, 1403 (Fed. Cir. 1988), *citing In re Sernaker*, 702 F.2d 989, 995 (Fed. Cir. 1983), and *In re McLaughlin*, 443 F.2d 1392, 1395 (CCPA 1971). It simply requires evidence that there is a reason one of ordinary skill would have contemplated the combination before reading the patent's disclosure, to ensure that the analysis is not based on hindsight.[14]

As the TSM analysis evolved, Federal Circuit panels sometimes have applied a more rigorous standard, at times even requiring a writing. This stringency has not been commonly applied and appears to be fact-specific to the case. Some have sought to characterize this as an absolute rule,[15] but AIPLA believes that these decisions should not be read to require a strict writing requirement. *See, e.g., Dystar Textilfarben GmbH, v. C.H. Patrick Co.*, No. 06-1088, -- F.3d --, slip op. at 15-26 (Fed. Cir. Oct. 3, 2006).

---

[14] The "suggestion or motivation to combine references does not have to be stated expressly." *Medical Instrumentation & Diagnostics Corp. v. Elektra AB*, 344 F.3d 1205, 1221(Fed. Cir. 2003)(emphasis added). *Accord Motorola, Inc. v. Interdigital Tech. Corp.*, 121 F.3d 1461, 1472 (Fed. Cir. 1997); *B.F. Goodrich, Co. v. Aircraft Braking Sys. Corp.*, 72 F.3d 1577, 1582 (Fed. Cir. 1996); *Cross Med.*, 424 F.3d at 1322.

[15] For instance, *In re Dembiczak*, 175 F.3d 994, 1000 (Fed. Cir. 1999), where the Federal Circuit reversed an obviousness holding for decorated Halloween leaf bags because the Board had not provided a specific analysis showing where the art taught a "reference-by-reference, limitation-by-limitation" reason to combine, the issue was first broached by the Government on appeal.

The TSM analysis looks for a reason to combine prior art; that reason can be found explicitly or implicitly in the prior art, it can flow from the nature of the problem solved by the invention, or it can come from the knowledge of those skilled in the art at the time of the invention. *In re Kahn*, 441 F.3d at 988; *see also, SIBIA Neurosciences, Inc. v. Cadus Pharm. Corp.*, 225 F.3d 1349, 1356 (Fed. Cir. 2000). So long as there is a reason to combine there are no hard and fast rules. (There are numerous cases where patent claims have been found invalid or unpatentable for obviousness without any explicit written motivation, as set out in the footnote.[16]) In keeping with *Graham*, 383 U.S. at 17, the TSM methodology is flexible. *In re Johnston*, 435 F.3d at 1385 ("Many factors are relevant to the motivation-to-combine ... such as the field of the specific invention, the subject matter of the references, the extent to which they are in the same or related fields of technology, the nature of the advance made by the applicant, and the maturity and congestion of the field.")

Petitioner asserts that the TSM analysis can be satisfied only by an explicit writing is wrong. Applying TSM requires a non-hindsight reason, nothing more.

---

[16] *E.g., Pro-Mold & Tool Co., Inc. v. Great Lakes Plastics, Inc.*, 75 F.3d 1568 (Fed. Cir. 1996); *In re Huang*, 100 F.3d 135, 139 n.5 (Fed. Cir. 1996); *Lamb-Weston, Inc. v. McCain Foods, Ltd.*, 78 F.3d 540 (Fed. Cir. 1996); *In re Gartside*, 203 F.3d 1305, 1320-21 (Fed. Cir. 2000); *McNeil-PPC, Inc. v. L. Perrigo Co.*, 337 F.3d 1362 (Fed. Cir. 2003); *Ruiz v. A.B. Chance Co.*, 357 F.3d 1270; *Princeton Biochemicals, Inc. v. Beckman Coulter, Inc.* 411 F.3d 1332, 1338-9 (Fed. Cir. 2005); *In re Kahn*, 441 F.3d at 988-990. Indeed, the Federal Circuit recently reiterated that the reason for combining prior art references need not be explicitly stated in the art. *See Ormoco Corp. v. Align Tech., Inc*, No. 05-1426, -- F.3d --, slip. op. at 12-13 (Fed. Cir. Aug. 30, 2006), and *Alza Corp. v. Mylan Labs., Inc.*, No. 06-1019, -- F.3d --, slip op. at 4-7 (Fed. Cir. Sept. 6, 2006).

C. THE TSM ANALYSIS APPLIES ESTABLISHED LAW

This Court's prior decisions undermine Petitioner's complaint that the Federal Circuit's TSM analysis is divorced from precedent. Those opinions spoke of a "suggestion" in bringing elements together in light of the prior art. The Federal Circuit and its predecessor court merely brought that concept forward as the TSM analysis, not as a "new" requirement for obviousness never before applied. It provides certainty by defining the principles that have historically been applied by this and other courts, and it is in keeping with *Graham*.

TSM embodies the long-held requirement that it is not enough to simply find the individual elements of an invention in diverse prior art teachings. Rather, the analysis must focus on the invention as a whole. There must be evidence that one of skill in that art understood "at the time invention was made" that they could be combined while forgetting the claimed invention. The standard is flexible, but it exists as a rubric to prevent hindsight analysis and is important to maintain.

2. THE TSM ANALYSIS IS VITAL TO THE PATENT SYSTEM

The TSM analytic framework fulfills at least three critical functions: (1) it protects against hindsight, (2) it provides the needed flexibility to address questions of obviousness where fact patterns differ, and (3) it provides certainty and predictability in the methodology of obviousness determinations due to the long history of its use. It is a critical component in separating new combination inventions from unpatentable ones. It should not be disturbed.

A. THE ESTABLISHED STANDARD PREVENTS HINDSIGHT AND ARBITRARY DECISIONS

In Paradise Lost, the 17th century English poet John Milton described fallen angels as immediately declaring gunpowder obvious once it was shown to them:

> *The invention all admired, and each how he*
> *To be the inventor missed; so easy it seemed,*
> *Once found, which yet unfound most would have thought,*
> *Impossible!*

John Milton, PARADISE LOST, Part VI, l. 478-501, quoted in *Gillette Co. v. S.C. Johnson & Son, Inc.*, 919 F.2d 720, 726 (1990). The same occurs in real life too, where inventions are called "obvious" once revealed.

Section 103(a) therefore imposes a difficult hypothetical burden, determining whether the invention as a whole would have been obvious to one of ordinary skill in the art when "the invention was made." Thus, the legal framework must employ a standard that analyzes the art just prior to creation of the invention without knowing the invention, in order to distinguish "obvious" inventions combining old elements from "non-obvious" ones that also combine old elements.

Graham explicitly cautions that standards are needed "to 'guard against slipping into use of hindsight,' and to resist the temptation to read into the prior art the teachings of the invention in issue." 383 U.S. at 36 (quoting *Monroe Auto Equip. Co. v. Heckethorn Mfg. & Supply Co.*, 332 F.2d 406, 412 (6th Cir. 1964)). TSM is this guard.

The TSM framework recognizes that whether an invention would be obvious to one of ordinary skill lies not just in whether (s)he would be capable of combining the individual elements, but whether that hypothetical person would have selected the individual elements from the prior

art and then put them together "as a whole" in the manner claimed:

> The inventor has available ... thousands of ideas, elements, thoughts, screws, racks, pinions, feedback circuits, materials, pumps, discriminators, and the Super Bowl score. Ninety-nine percent of his information is chaff information, not only totally unuseful for his purpose, but misleading him down blind alleys. Often, he does not know where the wheat information is, or whether it exists ... But merely removing the chaff art and putting the prior art elements in physical juxtaposition near each other, made the invention obvious at once to us all.

Tom Arnold & Floyd R. Nation, "Proving Section 103 Nonobviousness" (1978), *in* ULTIMATE CONDITION, at 4:17-18. Had the inventor not done the selection of relevant elements (most of which likely appear in the prior art), separating the wheat from the chaff, there would not have been any invention – but having done so there may well be a patentable advance.

An infringer, on the other hand, has the patent as a guide and uses it to embark on a search for prior art showing each element "to prove patent invalidity, after the patented combination is proved to work, they have faith where the inventor could only speculate, whether this combination will work better than 100 others that come to his mind." Arnold & Nation, at 4:41. *See Orthopedic Equip. Co. v. United States*, 702 F.2d 1005, 1012 (Fed. Cir. 1983) ("It is wrong to use the patent in suit as a guide through the maze of prior art references ... Monday morning quarterbacking is quite improper when resolving the question of nonobviousness in a court of law."). Section 103(a) restrains this type of unbridled hindsight advantage:

> A test which looks solely to the operation of elements after they are combined must necessarily be premised on the unsound assumption that it is always obvious to take known things and combine them. It is the very unification of the elements, where the prior art fails to suggest such an action, that represents the advancement; and the test of patentability should be directed to this factor.

Herbert H. Mintz & C. Larry O'Rourke, "The Patentability Standard in Historical Perspective: 'Invention' to Section 103 Nonobviousness" (1977), *in* ULTIMATE CONDITION, at 2:216 (footnote omitted)(emphasis in original).

This Court has recognized the inquiry will not be easy. *Graham*, 383 U.S. at 36. Unlike other areas of law, where concepts largely can be understood by reference to experiences, obviousness demands that the court and jury step into areas of technology foreign to everyone but the select group of those skilled in the art.[17] Hindsight is a tempting way to ease that discomfort, especially because the introduction to these unfamiliar concepts is virtually always based on the disclosure of the invention itself. But what the fact finder can recreate only after using the patent as a guide cannot be the inquiry. *Dann*, 425 U.S. at 229, quoting *Graham*, 383 U.S. at 37. Similarly, the inquiry cannot be whether, in retrospect, the invention is "so simple" that it is not worthy of patent protection. *Jones v. Hardy*, 727 F.2d 1524, 1530 (Fed. Cir. 1984) ("Judges are not constitut' ıally empowered to legislate their individual subjective views respecting degrees of inventiveness, a distinct approach

---

[17] As discussed *supra*, the so-called secondary indicia (or secondary considerations) consider the real-world reaction taking the invention into account, but that it is not the same as considering what those of skill in the art thought absent knowledge of the invention under section 103(a).

from that of determining validity on the basis of the evidence and procedural rules.").

The TSM methodology performs a critical evidentiary function to prevent these dangers, ensuring the proper review of obviousness decisions by requiring evidence – some reason – supporting combination. That is why it considers the motivation of a person having ordinary skill in that art at that time (it is not about the inventor's own thought process). Absent this requirement, there is no means of weeding out decisions based on improper hindsight or subjective belief.[18] As explained *supra*, courts can draw upon a vast array of evidence – not just an explicit written suggestion – in support of an obviousness determination. While Petitioner and *amici* argue that the TSM analysis imposes an unduly high burden, in truth the burden is little more than a demand that the trial court or Patent Office articulate the basis for its decision.

B. TSM PROVIDES FLEXIBILITY

The legal standard for obviousness does not change case to case but the facts – the inventions and technology – do. Thus, the analytic framework must be adaptable. As Judge Learned Hand said in *Safety Car*, *supra*, there cannot be a single, objective test. The rule must be flexible to account for both changing facts and technology. *Graham*, 383 U.S. at 11-12, 17-19. This is what the Federal Circuit has done. *In re Eli Lilly & Co.*, 902 F.2d 943, 947 (Fed. Cir. 1990).

In the present case the technology is mechanical, which the *Ruiz* opinion correctly noted is "simpler" to analyze. *Ruiz*, 357 F.3d at 1276; *see McGinley v. Franklin Sports, Inc.*,

---

[18] This worry applies to courts and juries, as in this case, and to the examination of patent applications. *See e.g., In re Kahn*, 441 F.3d at 986 (examiner's decision was based on improper hindsight when the examiner gave no basis to support conclusion that one of skill in the art would have combined references); *In re Rouffet*, 149 F.3d at 1358 (same).

262 F.3d 1339, 1351 (Fed. Cir. 2001) ("When the art in question is relatively simple, as is the case here, the opportunity to judge by hindsight is particularly tempting. Consequently, the tests of whether to combine references need to be applied rigorously.")(citations omitted). In more complex technologies, such as biotechnology, understanding the state of the art for an obviousness analysis is more difficult.

By looking through the eyes of one of ordinary skill in that art at the relevant time, TSM accounts for the different technologies. The long history of applying TSM demonstrates that it is well-adapted for the different circumstances in individual cases. As explained *supra*, the TSM analysis does not impose an inflexible rule of law demanding an explicit written suggestion in the prior art. To the contrary, it provides for multiple avenues of proof, allowing adaptation for different technologies and factual circumstances. *E.g., Dystar*, slip. op. at 8-9.

TSM's ability to account for wildly divergent fact patterns becomes clearer in reviewing how the methodology has been properly applied. For example, in *Lamb-Weston, Inc. v. McCain Foods, Ltd.*, 78 F.3d 540, the patent claimed a process for making partially-fried ("parfried") waffle-shaped french fries. The court found that the invention would have been obvious based on prior art disclosing waffle-shaped potato chips and the process for parfrying. *Id. at* 544-45. Applying the TSM analysis, the court found the motivation to combine from prior art disclosing the desirability of parfrying potato products and the suitability of the parfry process to waffle fries. *Id.* It stated that it was "the potato products resulting from these slicing devices, and not merely the devices themselves, that created the motivation to combine." *Id.* at 544.

Unpredictable technologies, like biotechnology, may require more explicit evidence supporting combination of known elements because of the state of knowledge in that

art. *In re Vaeck*, 947 F.2d 488 (Fed. Cir. 1991), is such a case. It concerned genetic engineering techniques for producing specific proteins that are toxic to insects in cyanobacteria. The prior art taught producing these proteins in genetically engineered bacteria cells, and separate references taught that a different protein could be made in cyanobacteria. *Id.* at 492. The PTO Examiner and appeal board found the invention obvious, holding that one of ordinary skill in the art would have been motivated to use cyanobacteria because they were attractive hosts for the expression of proteins. *Id.* at 492, 494. The Federal Circuit reversed, finding that obviousness could not be sustained on that record because there was no suggestion, either explicitly or implicitly, in the prior art that one of ordinary skill would reasonably expect the substitution to be successful. *Id.* at 495.[19]

While the legal standard for a TSM analysis remains unflinching, it is a flexible standard that may be applied case-specifically based upon the technology, art and circumstances. A *per se* rule of law that ignores these factors cannot adequately accommodate the diverse facts present in any given case because obviousness is an inquiry based on complex underlying facts. *Graham*, 383 U.S. at 17-18; *Eli Lilly*, 902 F.2d at 947.

The danger of *per se* rules becomes apparent when asking why the prior art might be silent on whether to combine elements. It could be because (1) the subject matter was so obvious that it would not be addressed in the written prior art, or (2) the idea is inventive and one that has not previously occurred to those of ordinary skill in the art. If,

---

[19] TSM does not preclude obviousness simply because the art is unpredictable. *See e.g., In re O'Farell*, 853 F.2d 894, 902 (Fed. Cir. 1988)(finding method of producing a protein in a bacterial host obvious in view of prior art containing a "detailed enabling methodology for practicing the claimed invention, a suggestion to modify the prior art to practice the claimed invention, and evidence suggesting that it would be successful").

as Petitioner suggests, an invention should be presumed obvious when the elements are old – unless the inventor can show the opposite, such as a complete rejection of the premise underlying the inventor's work (a so-called "teaching away"[20]) – the standard would account only for the former, and would improperly deny patents to the latter. This is the very reason why *Graham* recognized that the concept of "invention" is amorphous and called for a "functional approach to questions of patentability." *Graham*, 383 U.S. at 11-12. The TSM framework meets this demand and is well-suited to adapt between scenarios and thus more likely to provide correct determinations.

C. PRECEDENT PROVIDES CERTAINTY

This Court has more than once advised "that courts must be cautious before adopting changes that disrupt the settled expectations of the inventing community." *Festo Corp. v. Shoketsu Kinzoku Kogyo Kabushiki Co., Ltd.*, 535 U.S. 722, 739 (2002), *citing Warner-Jenkinson Co. v. Hilton Davis Chem. Co.*, 520 U.S. 17, 28 (1997). The patent system is vital to the American economic and legal system. *See* http://www.federalreserve.gov/BoardDocs/speeches/2003/20030404/default.htm (Statement by then-Federal Reserve Commissioner Alan Greenspan). In other words, the certainty of this well-defined system should not be upset unduly.

The *Festo* Court correctly described *Warner-Jenkins* as a situation where "[t]he petitioner ... requested another bright-line rule that would have provided more certainty in determining when estoppel applies but at the cost of disrupting the expectations of countless existing patent

---

[20] Teaching away is one of the recognized secondary considerations. *See In re Mercier*, 515 F.2d 1161, 1166 (CCPA 1975)("The relevant portions of a reference include not only those teachings which would suggest particular aspects of an invention to one having ordinary skill in the art, but also those teachings which would lead such a person away from the claimed invention."), *citing In re Lunsford*, 357 F.2d 380 (CCPA 1966).

holders." *Festo*, 535 U.S. at 739. This Court rejected that artificial assertion of "certainty" concerning infringement, acknowledging that the flexibility of the doctrine of equivalents and prior rules of patent prosecution were more important. *Id.* So too for obviousness.

There is a significant history and background to the TSM analysis that should not be overturned in favor of new standards, as proposed by some. The current approach is both robust and flexible, and amending it would only create new problems and potentially transform the patent system into a "cruel hoax."[21] Over the course of almost half a century, the courts have refined and articulated a standard for obviousness that is functional and understood by applicants and inventors, by the PTO and courts, as well as by litigants.[22] In short, the Federal Circuit has done exactly

---

[21] In 1979, Donald W. Banner, then Commissioner of Patents and Trademarks, wrote:

> [People] will be interested in the patent system only so long as they can reasonably understand the patent laws and rely on their stability. ... [Otherwise,] inventors and businessmen will turn their backs on the patent system. Indeed, when the government grant of a patent cannot reasonably be relied upon throughout the nation, then the patent system becomes a cruel hoax.

Foreword, ULTIMATE CONDITION, at p. v.

[22] A recent article surveying Federal Circuit obviousness decisions found that the court affirms determinations of obviousness in a clear majority of cases (75.3% for bench trials; 81.1% where JMOL was denied, and 64.1% from the PTO). Lee Petherbridge & R. Polk Wagner, "The Federal Circuit and Patentability: An Empirical Assessment of the Law of Obviousness", p. 36, *available at* http://lsr.nellco.org/upenn/wps/papers/103. The Federal Circuit affirmed only 39.7% of obviousness summary judgment decisions. *Id.* The study countered commonly held beliefs that the bar to patentability has been lowered by the Federal Circuit and showed that patent claims were found unpatentable for obviousness in a majority of cases, overall about 58%. *Id.* at p. 5. This rate has remained generally consistent from 1990 to 2005, and the reversal rate of PTO decisions has decreased. *Id.* at p. 34, Fig. 1 and p. 40, Fig. 3. Thus, TSM does create certainty; to change it would upset the settled expectations unduly.

what it was created to do – provide a measure of certainty in the application of patent standards. *See, e.g.*, S. Rep. No. 97-275 (1981), *reprinted in* 1982 U.S.C.C.A.N. 11, 14-15.

The current debate, involving vastly different readings of this Court's decision in *Graham*, shows neither *Graham* nor any other single case can provide the certainty of a doctrine applied over many years and in many different factual situations. Petitioner's attempt to wipe the slate clean and start anew cannot provide certainty. This approach would inevitably result in confusing the proper standard to be applied to any particular invention and in any technology. Even the Petitioner acknowledges that this type of dramatic change is ill-advised. Petitioner's Brief at 44 ("Any judicial change from these long-accepted and applied rules should proceed incrementally, in the common-law method, not by sudden disregard for an entire corpus of case law.") TSM should not be jettisoned.

D. PETITIONER'S AND AMICI'S PROPOSALS ARE INAPPROPRIATE

Petitioner and some *amici* use this case as a vehicle for attacking the patent system as a whole and challenging the rules of patent prosecution (despite the fact that Congress has amended some prosecution rules, such as those for patent expiration, since the patent-in-suit issued).[23] Those rules and regulations are not present in this case and they are not material to the analysis of section 103(a) or its application by lower courts. Most of the real complaints voiced by Petitioner and *amici* concern funding for the Patent and Trademark Office and its operations, which are more appropriately addressed in administrative and

---

[23] *See, e.g.*, Petitioner's Brief at 42; BSA Brief at 2; *Cf. Graham*, 383 U.S. at 18-19.

Congressional venues. [24] The U.S. Federal Trade Commission and National Academy of Sciences Reports cited to this Court also highlight the funding issues. [25] Nonetheless, a number of "new" proposals have been set forth and AIPLA will address some of them briefly.

One "historical" test referred to by Petitioner and *amici* is the so-called synergy test, allegedly set forth in *Anderson's Black Rock, Inc. v. Pavement Salvage Co.*, 396 U.S. 57 (1969), and *Sakraida v. Ag Pro, Inc.* 424 U.S. 273 (1976). Neither decision, however, purports to overrule the principles established in *Graham* (which does not mention a "synergy" test) or to set forth a higher standard for "combination" patents requiring evidence of a synergistic result as a prerequisite to non-obviousness. *See Graham*, 383 U.S. at 12 ("The *Hotchkiss* formulation, however, lies not in any label, but in its functional approach to questions of patentability."). The Tenth Circuit explicitly rejected the premise that either case created a synergy test. *Plastic Container Corp. v. Continental Plastics, Inc.*, 607 F.2d 885, 904-05 (10th Cir. 1979).

---

[24] *See, e.g.*, Statement of James E. Rogan [then Commissioner of the Patent and Trademark Office] Before the Subcommittee on Courts, the Internet and Intellectual Property, Apr. 3, 2003, on the United States Patent and Trademark Fee Modernization Act Of 2003, *available at* http://www.uspto.gov/web/offices/com/speeches/stratplan2003apr03rogan.htm); General Accounting Office, Intellectual Property Report at 3, Aug. 2002, *available at* http://www.gao.gov/new.items/d02907.pdf#search=%22General%20accounting%20office%20report%20%22august%202002%22%20%22Intellec-tual%20Property%22.

[25] Federal Trade Commission, "To Promote Innovation: The Proper Balance of Competition and Patent Law and Policy" (Oct. 2003), *available at* http://www.ftc.gov/os/2003/10/innovationrpt.pdf, at pp. 18-19, Chapter 6 (Competition and Patent Policy)("[M]any participants noted that the [US]PTO lacks the funding necessary consistently to make high-quality determinations as to whether patent applications deserve to be granted.); National Academy of Sciences, "A Patent System for the 21st Century" (April 19, 2004), *available at* http://www.nap.edu/books/0309089107/html, at pp. 107-108.

In *Anderson's*, the invention involved connecting mechanical parts previously known to perform a given function into a single machine. 396 U.S. at 58. Each individual part in the claimed invention was not dependent on the operation of another and each performed its expected function with no real interaction. *Id.* at 59-60. The same is true in *Sakraida*, where the Court observed that "this patent simply arranges old elements with each performing the same function it had been known to perform." 425 U.S. at 282. Neither decision differs from a TSM analysis, which is equally suited to find a combination obvious where there is a reason to find that the prior art taught or suggested the combination, regardless of its effects on functionality. The synergy test, on the other hand, cannot achieve a proper balance since it bypasses the issue of whether one of ordinary skill would have combined prior art and only asks whether in hindsight the results would have been explainable.

It is unclear whether Petitioners and *amici* believe the "synergy" test would be applicable to all patents or only a subclass of "combination patents." Nothing in any precedent by this Court, however, has carved out a special category of patents as "combination patents." Perhaps such a special category is implicit in the understanding of one of ordinary skill in the art where these elements already exist – but that it is not a legal test.

As discussed *supra*, the concept of "combination" is a misnomer since all inventions draw upon what came before them. The false premise of labeling certain inventions as "combination patents" separate from all other inventions is unwarranted.

> The reference to a "combination patent" is equally without support in the statute. There is no warrant for judicial classification of patents, whether into "combination" patents and some other unnamed and undefined class or other-

> wise. Nor is there warrant for differing treatment or consideration of patents based on a judicially devised label. Reference to "combination" patents is, moreover, meaningless. Virtually all patents are "combination patents," if by that label one intends to describe patents having claims to inventions formed of a combination of elements. It is difficult to visualize, at least in the mechanical-structural arts, a "non-combination" invention, i.e., an invention consisting of a single element.

Stratoflex, Inc. v. Aeroquip Corp., 713 F.2d 1530, 1540 (Fed. Cir. 1983). Those proposing change fail to specify how obviousness would be considered for non-combination patents. While inventions in the mechanical arts can be visualized as combinations, it is difficult to apply the same label to a compound or a chemical that cannot be broken down into separate parts (although elements of a chemical the structure – such as particular moieties – can be found in the prior art as separate parts too).

Some briefs, like the Government's, have proposed tests that ignore the burdens established in section 103(a) itself and require that an inventor prove nonobviousness, *i.e.* prove a negative. This is contrary to the Patent Code. For instance, Section 102 (note 10, *supra*) provides that an applicant is "entitled to a patent unless," clearly placing the burden on the PTO to show that an invention is unpatentable.[26] Similarly, in litigation involving an issued

---

[26] The Government's brief, at p. 26, claims that the Federal Circuit has "devalued the PTO's central role in determining whether a claimed invention is patentable." *Dickinson v. Zurko*, 527 U.S. 150 (2000), establishes that PTO fact-finding is due the same deference accorded other federal agencies, the "substantial evidence" standard (5 U.S.C. § 706(2)(E)). *See In re Gartside, supra.*

patent, 35 U.S.C. § 282 provides that "[a] patent shall be presumed valid," including when section 103(a) is a defense.

The mischief that can be caused by the proposals raised by Petitioner and *amici* can be seen by looking at the Government's brief. It makes the amazing assertion, *e.g.*, at page 10, that patents should only issue for extraordinary inventions. It is just this sort of overreaching that shows how the system can go astray without an established standard. The standard already exists and it should be affirmed.

CONCLUSION

On the facts as presented, the Court should hold in favor of Respondents and affirm the remand for further proceedings. Such a ruling would not be a final determination of whether the invention would have been obvious, but would only require that it be determined in the proper analytic framework.

Section 103(a)'s language itself articulates two critical points: (1) the inquiry must focus on "the subject matter as a whole," not the individual elements of the invention; and (2) the inquiry must focus on whether the invention as a whole was obvious to one of ordinary skill in the relevant art, not whether that person would be capable of assembling individual elements absent some reason to do so.

Thus, the statute recognizes that it is not enough to identify individual elements of an invention in the prior art whether or not they could theoretically be assembled by one of ordinary skill in the art using existing tools. Obviousness demands more. Without a suggestion to combine, the danger that section 103(a) obviousness could become little more than the application of section 102 anticipation on a part-by-part basis was immediately recognized by the courts. Over the course of more than 40 years of decisions, the CCPA, and later the Federal Circuit, have developed an analytic framework for just this protection. It is an appropriate standard that should be confirmed.

Respectfully submitted,

MELVIN C. GARNER
President
AMERICAN INTELLECTUAL
PROPERTY LAW ASSOCIATION
241 Eighteenth Street, South
Suite 700
Arlington, VA 22202
(703) 415-0780

JEFFREY I. D. LEWIS
Counsel of Record
MELISSA MANDRGOC
PATTERSON BELKNAP WEBB &
TYLER LLP
1133 Avenue of the Americas
New York, NY 10036
(212) 336-2000

Counsel for American Intellectual Property Law Association

5601

(21)

AUG 22 2006
FILED

No. 04-1350

IN THE

Supreme Court of the United States

KSR INTERNATIONAL CO.,

Petitioner,

v.

TELEFLEX, INC.,

Respondent.

ON WRIT OF CERTIORARI TO THE UNITED STATES COURT OF APPEALS FOR THE FEDERAL CIRCUIT

BRIEF FOR AMICUS CURIAE BAR ASSOCIATION OF THE DISTRICT OF COLUMBIA — PATENT, TRADEMARK & COPYRIGHT SECTION IN SUPPORT OF NEITHER PARTY

Lynn E. Eccleston
Counsel and Past Section Chair
MCGUIRE WOODS
1750 Tysons Blvd., Suite 1800
McLean, VA 22102
Telephone: 703-712-5138

Anthony W. Kandare
Section Chair
BANNER & WITCOFF, LTD.
1001 G Street, N.W.
Washington, DC 20001
Telephone: 202-824-3244

Blair E. Taylor, Ph.D.*
Chair, Amicus Committee
Robert S. Babayi
Vice-Chair, Patent Committee
VENABLE, LLP
575 7th Street, N.W.
Washington, D.C. 20004
Telephone: 202-344-4000

* *Counsel of Record*

Attorneys for Amicus Curiae Bar Association of the District of Columbia — Patent, Trademark & Copyright Section

TABLE OF CONTENTS

Page

TABLE OF AUTHORITIES ii

INTEREST OF AMICUS CURIAE 1

SUMMARY OF THE ARGUMENT 2

ARGUMENT 3

I. GRAHAM PROVIDES A WORKABLE FRAMEWORK FOR ASSESSING PATENTABILITY 3

II. MAINSTREAM FEDERAL CIRCUIT PRECEDENT IS PROPERLY GROUNDED IN GRAHAM 5

III. GUIDANCE FOR IMPLEMENTING GRAHAM SHOULD INCORPORATE FEDERAL CIRCUIT PRECEDENT 9

CONCLUSION 15

TABLE OF AUTHORITIES

CASES

Page

Abbott Labs. v. Andrx Pharms., Inc.,
452 F.3d 1331 (Fed. Cir. 2006) 11-12

B.F. Goodrich, Co. v. Aircraft Braking Sys. Corp.,
72 F.3d 1577 (Fed. Cir. 1996) 10

Echolochem, Inc. v. S. Cal. Edison Co.,
227 F.3d 1361 (Fed. Cir. 2000) 5

Eli Lilly & Co. v. Zenith Goldline Pharms., Inc.,
364 F. Supp. 2d 820 (S.D. Ind. 2005) 4

Envtl. Designs, Ltd. v. Union Oil Co.,
713 F.2d 693 (Fed. Cir. 1983) 5

Finnegan Corp. v. Int'l Trade Comm'n,
180 F.3d 1354 (Fed. Cir. 1999) 11

Graham v. John Deere Co.,
383 U.S. 1 (1966) ..... passim

In re Fine,
837 F.2d 1071 (Fed. Cir. 1988) 5

In re Gartside,
203 F.3d 1305 (Fed. Cir. 2000) 13

In re Johnston,
435 F.3d 1381 (Fed. Cir. 2006) 8, 10

In re Kahn,
441 F.3d 977 (Fed. Cir. 2006) 4, 10, 12, 13

In re Napier,
55 F.3d 610 (Fed. Cir. 1995) 11

In re Rouffet,
149 F.3d 1350 (Fed. Cir. 1998) 6

McGinley v. Franklin Sports, Inc.,
262 F.3d 1339 (Fed. Cir. 2001) 8, 9

Monarch Knitting Mach. Corp. v. Sulzer Morat GmbH,
139 F.3d 877 (Fed. Cir. 1998) 10

Ruiz v. A.B. Chance Co.,
357 F.3d 1270 (Fed. Cir. 2004) 6, 11, 12, 13

Stratoflex, Inc. v. Aeroquip Corp.,
713 F.2d 1530 (Fed. Cir. 1983) 12

STATUTES AND REGULATIONS

35 U.S.C. § 103(a) .....passim

37 C.F.R. § 1.144.....14

MISCELLANEOUS

Natalie M. Derzko, The Impact of Recent Reforms of the Hatch-Waxman Scheme on Orange Book Strategic Behavior and Pharmaceutical Innovation, 45 Idea 165, 238 n.377 (2005).....11

BRIEF FOR AMICUS CURIAE BAR ASSOCIATION OF THE DISTRICT OF COLUMBIA – PATENT, TRADEMARK & COPYRIGHT SECTION IN SUPPORT OF NEITHER PARTY

THE INTEREST OF AMICUS CURIAE

The Patent, Trademark & Copyright Section of the Bar Association of the District of Columbia ("Association") respectfully submits this brief as amicus curiae in support of neither party.[1]

The Association is one of the senior-most intellectual property bar associations in the United States, drawing its membership from government, industry and private practice. The Association and its members have a substantial interest in the adjudication of significant issues defining our patent laws, and only submit amicus curiae briefs when issues of such magnitude arise. The case at bar presents such an important issue, namely defining the evidentiary standard for determining obviousness under 35 U.S.C. § 103(a). The Association seeks to assist the Court by directing its attention to the rationale behind existing Federal Circuit precedence assessing obviousness, and the importance of including such rationale in any changes this Court might make to this evidentiary standard.

---

[1] This amicus curiae brief is presented by the Patent, Trademark & Copyright Section of the Bar Association of the District of Columbia under Supreme Court Rule 37.3(a). The parties have consented to the filing of this amicus curiae brief in papers docketed with this Court on July 19, and July 31, 2006. In accordance with Supreme Court Rule 37.6, amicus curiae states that no counsel for a party authored any part of this brief. Only this amicus curiae made a monetary contribution to the preparation and submission of this brief. Counsel for amicus curiae prepared this brief on a pro bono basis.

SUMMARY OF THE ARGUMENT

In its landmark Graham case in 1966, this Court established a set of four factors for assessing obviousness. Lower courts, in implementing the teachings of Graham over the past forty years, developed subtests designed to objectively weigh these factors in a case-by-case manner. One such test, the motivation-suggestion-teaching test, was crafted by the Federal Circuit to address the very real problem of improperly injecting hindsight into the obviousness evaluation. As a subtest of Graham, the Federal Circuit's motivation-suggestion-teaching criteria provide a roadmap that patent examiners, members of the bar, and courts alike follow to avoid the pitfalls of applying hindsight in obviousness reviews. When properly applied, the motivation-suggestion-teaching test, like the Graham factors from which it stems, assists in genesis and enforcement of valid patents. Although it might benefit from some refinement, the heart of this Federal Circuit subtest is consistent with Graham, serves a useful purpose, and should be incorporated into any additional guidelines this Court may devise for evaluating the obviousness standard articulated by Congress in 35 U.S.C. § 103(a).

ARGUMENT

I. GRAHAM PROVIDES A WORKABLE FRAMEWORK FOR ASSESSING PATENTABILITY

The Association endorses the standard of patentability announced in Graham v. John Deere Co., 383 U.S. 1 (1966). The Association submits that the Graham standard, when followed correctly, should result in issuance by the U.S. Patent and Trademark Office (PTO) of patents with high probability of validity. The properly applied standard also provides trial courts with the necessary guidance to adjudicate obviousness issues that arise in connection with granted patents.

The Graham standard itself originated from the leading case this Court selected for addressing obviousness arising under our patent laws. Graham was one of four cases selected for the initial review of the non-obviousness standard introduced in 1952 under what is today restyled as 35 U.S.C. § 103(a).[2] It took the Court more than a decade from the enactment of the 1952 statute to reach its both thorough and well-reasoned landmark ruling in Graham. The result was a decision that provides a reliable and predictable framework for the administration of obviousness jurisprudence.

---

[2] As stated in Adams Battery – the fourth case - it "is a companion case to No. 11, Graham v. John Deere Co., 383 U.S. 1, decided this day [that includes] Nos. 37 and 43, Calmar, Inc. v. Cook Chemical Co. and Colgate-Palmolive Co. v. Cook Chemical Co." United States v. Adams, 383 U.S. 39, 40 (1966). Adams Battery "is controlled on the merits by ... Graham ... ." 383 U.S. at 41.

The message from the Graham court is a collection of four factors for determining obviousness, factors still followed by district and appellate courts today. Those factors are: 1) the scope and content of the prior art; 2) the differences between the prior art and the claimed invention; 3) the level of skill in the art; and 4) the objective indicia of nonobviousness. Graham, 383 U.S. at 17; In re Kahn, 441 F.3d 977, 987 (Fed. Cir. 2006); Eli Lilly & Co. v. Zenith Goldline Pharms., Inc., 364 F. Supp. 2d 820 (S.D. Ind. 2005). In crafting these factors, the Graham Court recognized that the heart of the obviousness inquiry turns on whether an invention is the result of ingenuity and skill, or is merely the handiwork of a skilled mechanic. The Court, therefore, fashioned a practical framework for differentiating the patentable from the nonpatentable on a fact intensive, case-by-case basis.

In the instant case, Petitioner argues for obviousness of the claim at issue – claim 4 – as merely a combination of old parts "compris[ing] nothing more than (i) a pre-existing 'adjustable pedal assembly,' combined with (ii) a pre-existing 'electronic control.'" Petitioners' Petition for certiorari at 6. Respondent argues for non-obviousness of the claim as an improvement over the prior art combination that involved an inefficient use of critical footwell space. According to the Respondent, the invention of claim 4 is a unique *arrangement* of old components, which overcame the difficulty of insufficient footwell space. Respondent's Opposition to Petition for certiorari at 5-6. The Association takes no position on the merits of this dispute: whether the patent in-suit is invalid under 35 U.S.C. § 103(a) under the proper Graham analysis.

The Graham decision is flexible in its application, providing our courts sufficient leeway to assess obviousness

issues on a case-by-case basis for the past forty years. Graham is still viable law, and the Association sees no reason to modify the Graham factors in the adjudication of this, or any other pending patent dispute. The Association does, however, believe that the Court should seize the instant case as a platform to enunciate additional guidelines for assessing obviousness under the flexible framework set forth years ago in Graham. After all, Graham does not specify how courts, patent examiners, or members of the bar should weigh the relevant factors in making an obviousness determination in any particular case. Consequently, courts, the Federal Circuit included, necessarily engineered their own subtests for implementing Graham.

II. MAINSTREAM FEDERAL CIRCUIT PRECEDENT IS PROPERLY GROUNDED IN GRAHAM

The Association submits that any additional guidelines should not ignore the wisdom of over twenty years of mainstream Federal Circuit precedent addressing obviousness, including that court's now embattled motivation-suggestion-teaching test. This test evolved over the Federal Circuit's lifetime as a means for addressing a serious impediment to objective evaluation of obviousness, namely the interjection of hindsight into the calculus by the evaluator. "We 'cannot use hindsight reconstruction to pick and choose among isolated disclosures in the prior art to deprecate the claimed invention.'" Ecolochem, Inc. v. S. Cal. Edison Co., 227 F.3d 1361, 1371 (Fed. Cir. 2000) (citing In re Fine, 837 F.2d 1071, 1075 (Fed. Cir. 1988)). By invoking hindsight, evaluators are prone to the notorious pitfall of declaring true inventions merely unpatentable combinations of old elements. See Envtl. Designs, Ltd v. Union Oil Co., 713 F.2d 693, 698 (Fed. Cir. 1983) ("[V]irtually all

[inventions] are combinations of old elements."). According to the Federal Circuit:

> As this court has stated, "virtually all [inventions] are combinations of old elements." Therefore, an examiner [or accused infringer] may often find every element of a claimed invention in the prior art. If identification of each claimed element in the prior art were sufficient to negate patentability, very few patents would ever issue. Furthermore, rejecting patents solely by finding prior art corollaries for the claimed elements would permit an examiner [or accused infringer] to use the claimed invention itself as a blueprint for piecing together elements in the prior art to defeat patentability of the claimed invention. ... To counter this potential weakness in the obviousness construct, the suggestion to combine requirement stands as a critical safeguard against hindsight analysis and rote application of the legal test for obviousness.

In re Rouffet, 149 F.3d 1350, 1357-58 (Fed. Cir. 1998) (internal citations omitted).

The Federal Circuit did not impetuously craft its motivation-suggestion-teaching test out of invisible cloth. Rather, this rational test finds its underpinnings in the text of Section 103 itself, which mandates that obviousness be determined in view of the differences between the claimed "subject matter as a whole" and the prior art. See Ruiz v. A.B. Chance Co., 357 F.3d 1270, 1275 (Fed. Cir. 2004) ("The 'as a whole' instruction in title 35 prevents evaluation

of the invention part by part."). As explained by the Ruiz court, "Section 103 precludes this hindsight discounting of the value of new combinations by requiring assessment of the invention as a whole." Id. This Federal Circuit test is designed to provide "further assurance of an 'as a whole' assessment of the invention under § 103 by requiring a showing that an artisan of ordinary skill in the art at the time of the invention, confronted by the same problems as the inventor and with no knowledge of the claimed invention, would select the various elements from the prior art and combine them in the claimed manner." Id. Thus, to avoid the application of hindsight, and to ensure compliance with the "as a whole" mandate of Section 103, the Federal Circuit devised its test such that "the examiner or court must show some suggestion or motivation, before the invention itself, to make the new combination." Id.

The motivation-suggestion-teaching test was developed by the Federal Circuit as a practical working extension of Graham in an effort to guard against the invocation of hindsight in the obviousness calculus. As explained by the Federal Circuit:

> The assessment of whether to combine references in a given case has sometimes been viewed conceptually as a subset of the first Graham factor, the scope and the content of the prior art. Although that view is not incorrect, accurate assessment of whether to combine references may require attention to other Graham factors. For example, the level of skill in the art may inform whether the artisan would find a suggestion to combine in the teachings of an exemplar of prior art. Where the level of skill is high, one may

> assume a keener appreciation of nuances taught by the prior art. Similarly, appreciation of the differences between the claims in suit and the scope of the prior art references – a matter itself informed by the operative level of skill in the art-informs the question of whether to combine prior art references. At bottom, in each case the factual inquiry whether to combine references must be thorough and searching.

McGinley v. Franklin Sports, Inc., 262 F.3d 1339, 1351-52 (Fed. Cir. 2001) (internal citations omitted). Similarly, the Federal Circuit states in In re Johnston, 435 F.3d 1381, 1385 (Fed. Cir. 2006):

> As precedent illustrates, many factors are relevant to the motivation-to-combine aspect of the obviousness inquiry, such as the field of the specific invention, the subject matter of the references, the extent to which they are in the same or related fields of technology, the nature of the advance made by the applicant, and the maturity and congestion of the field. Objective indicia are also relevant, see Graham v. John Deere Co., 383 U.S. 1 (1966), for the commercial response to an invention is a useful control upon hindsight evaluation of obviousness.

As is evident from the quoted passages, the Federal Circuit acknowledges that its test is a subset of one or more Graham factors, designed to implement the directive of this Court. Accordingly, when viewed in context of the Federal Circuit's body of obviousness precedent, the motivation-

suggestion-teaching test is consistent with this Court's teaching in Graham. The test requires a patent examiner or court to view the prior art through the prism of the skilled artisan, without using the claimed invention itself as a cheat sheet for guidance. The suggestion to combine references prevents evaluators from cherry-picking prior art while using claims as blueprints for their selections. This is a particularly important safeguard when the art in question is relatively simple. See McGinley, 262 F.3d at 1351.

Thus, contrary to the assertions of some, particularly those who have never been on either end of a patent examination,[3] this test provides a beneficial tool for objectively evaluating a claimed invention through the eyes of one of ordinary skill in the art. While not perfect, the test does provide a rational basis for assessing evidence of patentability in view of the Graham factors. The Association submits that when properly applied, the motivation-suggestion-teaching test aids in the genesis and enforcement of valid patents.

III. GUIDANCE FOR IMPLEMENTING GRAHAM SHOULD INCORPORATE FEDERAL CIRCUIT PRECEDENT

Graham requires courts to determine the scope and content of the prior art and ascertain the differences between the prior art and the claims at issue, while resolving the level of ordinary skill in the pertinent art. Against this background, courts determine whether the claimed subject matter would have been obvious to a person of ordinary

---

[3] Amicus Brief for Twenty-Four Intellectual Property Law Professors at 5-7 (accusing the Federal Circuit of departing from the mandate of evaluating obviousness from the perspective of one of ordinary skill in the art).

skill in the art at the time the claimed invention was made. Graham, 383 U.S. at 13-17. Relying on the motivation-suggestion-teaching test, mainstream Federal Circuit precedent provides a workable obviousness standard consistent with Graham to objectively eliminate the possibility of hindsight-based obviousness analysis.

In order to avoid the use of such improper hindsight, the Federal Circuit requires the considered prior art to be drawn from references "either in the field of the applicant's endeavor or [] reasonably pertinent to the problem with which the inventor was concerned." In re Kahn, 441 F.3d at 987. This requirement provides an objective standard in the first stage of the obviousness analysis for excluding irrelevant prior art. The Federal Circuit instructs that the suggestion to combine references may be expressly stated, or may flow from the nature of the problem solved, but cautions against "defining the problem in terms of its solution," which invites hindsight selection of the prior art relevant to obviousness. Monarch Knitting Mach. Corp. v. Sulzer Morat GmbH, 139 F.3d 877, 880 (Fed. Cir. 1998).

The Federal Circuit also recognizes that an express teaching in the prior art that announces the identity and selectability of claimed elements from various prior art sources is an uncommon find in patent law. In re Johnston, 435 F.3d at 1385 ("An explicit teaching that identifies and selects elements from different sources and states that they should be combined in the same way as in the invention at issue, is rarely found in the prior art."). Thus, the suggestion or motivation to combine claimed features "need not be expressly stated." B.F. Goodrich, Co. v. Aircraft Braking Sys. Corp., 72 F.3d 1577, 1582 (Fed. Cir. 1996).

Rather, the Federal Circuit cautions:

> While this court indeed warns against employing hindsight, its counsel is just that – a warning. That warning does not provide a rule of law that an express, written motivation to combine must appear in prior art references before a finding of obviousness. Stated differently, this court has consistently stated that a court or examiner may find a motivation to combine prior art references in the nature of the problem to be solved.

Ruiz, 357 F.3d at 1276. Accordingly, a motivation to combine references may be inherently present in the prior art. In re Napier, 55 F.3d 610, 613 (Fed. Cir. 1995) ("The inherent teaching of a prior art reference, a question of fact, arises both in the context of anticipation and obviousness."). As explained by Circuit Judge Newman, "the purpose of the rule of inherency is to accommodate common knowledge, knowledge that judges might not know but that would be known to practitioners in the field." Natalie M. Derzko, The Impact of Recent Reforms of the Hatch-Waxman Scheme on Orange Book Strategic Behavior and Pharmaceutical Innovation, 45 Idea 165, 238 n.377 (2005); see also Finnigan Corp. v. Int'l Trade Comm'n, 180 F.3d 1354, 1365 (Fed. Cir. 1999).

Moreover, the Federal Circuit directs that "mere identification in the prior art of each element is insufficient to defeat the patentability of the combined subject matter as a whole. Rather, a party alleging invalidity due to obviousness must articulate the reasons one of ordinary skill in the art would have been motivated to select the references and to combine them to render the claimed invention obvious." Abbott Labs. v. Andrx Pharms., Inc., 452 F.3d

1331, 1336 (Fed. Cir. 2006). The "motivation" requirement on the part of the skilled artisan acts as another objective standard of the obviousness analysis, working in harmony with secondary indicia of nonobviousness that must also be considered, if in evidence. Graham, 383 U.S. at 17-18; Stratoflex, Inc. v. Aeroquip Corp., 713 F.2d 1530, 1538-39 (Fed. Cir. 1983).[4] As reasoned by the Federal Circuit, the requirement for an explanation of the motivation, suggestion, or teaching to combine references "guards against hindsight in all cases – whether or not the applicant offers evidence on secondary considerations" of nonobviousness. In re Kahn, 441 F.3d at 986. The logic permeating this precedent is evident, and over the years has generally served patent law well. Yet, as with any dynamic entity, there is room in our patent jurisprudence for improvement.

The Association submits that Federal Circuit's motivation-suggestion-teaching test provides an excellent starting point in an obviousness analysis. The Association acknowledges that it is likely difficult, if not impossible, to devise an obviousness test that is dispositive of all situations. The test is more amenable to some art fields than other fields. Thus, the ability to glean a motivation to combine references from the nature of the problem to be solved "is particularly relevant with simpler mechanical technologies." Ruiz, 357 F.3d at 1276. The Association recognizes that the motivation-suggestion-teaching test may be impractical in

---

[4] The objective indicia of nonobviousness include the extent of commercial success of the patented invention, unexpected properties of the invention compared to the prior art, whether the invention satisfies a long-felt need, whether others have failed to find a solution to the problem plaguing the art, and any copying of the invention by others. Graham v. John Deere Co., 383 U.S. 1, 17-18 (1966); Stratoflex Inc. v. Aeroquip Corp., 713 F.2d 1530, 1538-39 (Fed. Cir. 1983).

certain fields in which custom provides little incentive for skilled artisans to memorialize in the prior art that which is known and mundane. In those art fields, application of the motivation-suggestion-teaching test precluding hindsight may not adequately reach the issue of obviousness, and other tests must be employed.

Certain amici targeted these difficult fields in an effort to persuade this Court that the Federal Circuit's motivation-suggestion-teaching test is so fatally flawed as to deserve a swift and permanent burial. To do so, in the Association's view, would foolishly set the clock of patent jurisprudence back to the 1980s. It is particularly unnecessary in the instant case, which is a non-precedential decision not citable to the Federal Circuit under its local Rule 47.6(5). While the truncated language of some Federal Circuit opinions may suggest that the motivation-suggestion-teaching test permits clearly invalid patents to go unchecked, a balanced view of Federal Circuit precedent illuminates a reasonable test applied effectively by courts and the PTO when assessing obviousness. See, e.g., In re Gartside, 203 F.3d 1305, 1319-1320 (Fed. Cir. 2000) (agreeing with Board's rationale for a motivation to combine references and its finding of obviousness); In re Kahn, 441 F.3d at 991 (affirming Board's factual determinations on motivation to combine as a basis for finding claims prima facie obvious); Ruiz, 357 F.3d at 1276 (supporting district court's conclusion that the prior art provided motivation to combine references, rendering claims obvious).

While the motivation-suggestion-teaching test may be used as an initial test for implementing Graham, this Court could craft other secondary tests that by themselves, or in combination with motivation-suggestion-teaching test, address obviousness issues in fields not amenable to explicit

or implicit suggestions for combining prior art. An approach that includes casting a wider, more inclusive evidentiary net, without sacrificing established standards, should be taken to avoid tossing the proverbial baby out with the bathwater. Other secondary considerations, such as long-felt need and teachings against the combination, should still mitigate against any additional putative or administrative showings in harmonious accord with the Graham standards. Given that some type of obviousness fact finding is mandated under Graham, a court or the PTO cannot conclude that a claimed invention would have been obvious unless it makes such findings. The facts relevant to a teaching, suggestion, or motivation to combine prior art in the particular manner claimed by the patent at issue should be considered in the process. A flexible approach that allows ample room to rely on teachings, suggestions, or motivations as a sufficient basis for a finding of obviousness is generally a sound prerequisite to an obviousness determination in most cases.

Whatever is devised, any new guidelines should prevent the application of rigid categorical rules that would inflexibly limit the ability of the courts or the PTO to make individualized determinations of obviousness. However, new guidelines should not permit a return to the rampant use of hindsight by patent examiners or accused infringers that the motivation-suggestion-teaching test sought to curb. The existence of administrative remedies, which should satisfy the need for enhanced evidence in many questionable cases (e.g., 37 C.F.R. § 1.144), already go a long way toward resolving latent questions of obviousness, particularly in combination with the publication of most U.S. applications. Publication of patent applications in areas where latent questions of obviousness often arise allows interested parties to provide additional art relevant to the published claims. Resort may be made to additional fact finding associated

with other secondary tests if the showing required for the motivation-suggestion-teachings test is difficult or impossible. Such an approach would address concerns of practitioners in newly emerging technical fields, or in situations in which a combination of claimed elements is so obvious that persons skilled in the art lack incentive to record them.

CONCLUSION

The Association respectfully submits that the Federal Circuit's motivation-suggestion-teaching test is generally sound precedent that is consistent with, and is an extension of, this Court's teachings in Graham. While the Association agrees that this test is not always a perfect fit for emerging technologies, it does provide a sound basis for beginning an obviousness determination without the application of hindsight. Any revisions to the criteria set forth in Graham for evaluating obviousness should incorporate the rationale of the Federal Circuit's precedence implementing the motivation-suggestion-teaching test to avoid a relapse into hindsight-tainted determinations by our courts and the PTO.

Respectfully submitted,

Lynn E. Eccleston
Counsel and Past Chair,
Patent, Trademark &
Copyright Section of the Bar
Association of the District of
Columbia

MCGUIRE WOODS
1750 Tysons Blvd., Suite 1800
McLean, VA 22102
Telephone: 703-712-5138

Anthony Kandare
Chair,
Patent, Trademark &
Copyright Section of the Bar
Association of the District of
Columbia

BANNER & WITCOFF, LTD.
1001 G Street, NW.
Washington, DC 20001
Telephone: 202-824-3244

Attorneys for Amicus Curiae Bar Association of the District of Columbia – Patent, Trademark & Copyright Section

Blair E. Taylor, Ph.D.*
Chair, Amicus Committee,
Robert S. Babayi
Vice-Chair, Patent Committee,
Patent, Trademark &
Copyright Section of the
Bar Association of the
District of Columbia

VENABLE LLP
575 7th Street N.W.
Washington, DC 20004
Telephone: 202- 334-4000

* *Counsel of Record*

August 22, 2006

138D

(41)

No. 04-1350

Supreme Court, U.S.
FILED
OCT 16 2006
OFFICE OF THE CLERK

In The Supreme Court of the United States

KSR INTERNATIONAL CO.,

Petitioner

v.

TELEFLEX INC., ET AL.

On Writ Of Certiorari To The United States Court Of Appeals For The Federal Circuit

BRIEF OF BIOTECHNOLOGY INDUSTRY ORGANIZATION AS *AMICUS CURIAE* IN SUPPORT OF RESPONDENTS

THOMAS DILENGE
HANS SAUER
BIOTECHNOLOGY INDUSTRY ORGANIZATION
1225 Eye Street, NW,
Suite 400
Washington, DC 20005

BETH S. BRINKMANN
Counsel of Record
SETH M. GALANTER
BRIAN R. MATSUI
MORRISON & FOERSTER LLP
2000 Pennsylvania Ave., NW
Washington, DC 20006
(202) 887-1544

MATTHEW I. KREEGER
MORRISON & FOERSTER LLP
425 Market Street
San Francisco, CA 94105
(415) 268-6000

Counsel for Biotechnology Industry Organization as amicus curiae

OCTOBER 16, 2006

COCKLE LAW BRIEF PRINTING CO. (800) 225-6964
OR CALL COLLECT (402) 342-2831

TABLE OF CONTENTS

Page

TABLE OF AUTHORITIES iii

INTEREST OF *AMICUS CURIAE* 1

SUMMARY OF ARGUMENT 2

ARGUMENT 5

I. Significant Advancements Through Biotechnology Rely Upon Investment That Is Predicated On An Objective And Predictable Test For Obviousness 5

A. An Obviousness Analysis That Does Not Protect Against Hindsight Bias Would Negatively Affect Biotechnology Research And Development 5

B. Research And Development In The Biotechnology Industry Is Particularly Expensive, Time-Consuming, And Presents An Unusually High-Risk Investment That Relies On An Objective And Predictable Application Of Obviousness Law 8

II. The Federal Circuit's Approach Is Consistent With This Court's Precedents And Provides Flexibility In Determining Whether An Invention Is Obvious Based On Objective Evidence 11

A. Section 103(A) Requires An Objective Nonobviousness Inquiry To Avoid Hindsight Bias 11

B. The Federal Circuit's Consideration Of Whether There Is A Teaching, Suggestion, Or Motivation To Combine The Prior Art To Determine Obviousness Is Consistent With *Graham* 15

TABLE OF CONTENTS – Continued

Page

C. The Federal Circuit's Judgment Below Is Consistent With This Court's Precedents ... 21

III. Retention Of The *Graham* Framework Is Important To Biotechnology Innovation 23

A. A Separate Test For So-Called Combination Patents Is Inconsistent With *Graham* And Should Not Be Adopted By This Court 23

B. *Graham*'s Emphasis On Factual Findings And Secondary Considerations Promotes Objectivity And Must Be Maintained 26

CONCLUSION 30

TABLE OF AUTHORITIES

Page

CASES

Alza Corp. v. Mylan Labs, Inc., No. 06-1019, ___ F.3d ___, 2006 WL 2556356 (Fed. Cir., Sept. 6, 2006) 15, 16, 19, 20

Anderson's-Black Rock, Inc. v. Pavement Salvage Co., 396 U.S. 57 (1969) 14, 23, 24

Anderson v. Liberty Lobby, Inc., 477 U.S. 242 (1986) 22

B. G. Corp. v. Walter Kiddie & Co., 79 F.2d 20 (2d Cir. 1935) 13, 16

Bonito Boats, Inc. v. Thunder Draft Boats, 489 U.S. 141 (1989) 5

Cross Med. Prods., Inc. v. Medtronic Sofamor Danek, Inc., 424 F.3d 1293 (2005) 18

Cuno Eng'g Corp. v. Automatic Devices Corp., 314 U.S. 84 (1941) 12, 13

Dann v. Johnston, 425 U.S. 219 (1976) 14, 24

In re Dembiczak, 175 F.3d 994 (Fed. Cir. 1999) 16

In re Deuel, 51 F.3d 1552 (Fed. Cir. 1995) 22

Diamond Rubber Co. v. Consolidated Rubber Tire Co., 220 U.S. 428 (1911) 12

Dickinson v. Zurko, 527 U.S. 150 (1999) 26

Dystar Textilfarben GmbH & Co. Deutschland KG v. C.H. Patrick Co., No. 06-1088, ___ F.3d ___, 2006 WL 2806466 (Fed. Cir. Oct. 3, 2006) 18

Graham v. John Deere Co., 383 U.S. 1 (1966) ..... *passim*

Hotchkiss v. Greenwood, 52 U.S. 248 (1851) 11, 12, 13

TABLE OF AUTHORITIES – Continued

Page

Interconnect Planning Corp. v. Feil, 774 F.2d 1132 (Fed. Cir. 1985) 16

In re Kahn, 441 F.3d 977 (Fed. Cir. 2006) 16, 18

In re Kotzab, 217 F.3d 1365 (Fed. Cir. 2000) 18, 25

Magowan v. New York Belting & Packing Co., 141 U.S. 332 (1891) 27, 28

In re Mayne, 104 F.3d 1339 (Fed. Cir. 1997) 20

McClain v. Ortmayer, 141 U.S. 419 (1891) 28

Pro-Mold & Tool Co. v. Great Lakes Plastics, Inc., 75 F.3d 1568 (Fed. Cir. 1996) 16

Radio Corp. of Am. v. Radio Eng'g Labs., Inc., 293 U.S. 1 (1934) 22

In re Rouffet, 149 F.3d 1350 (Fed. Cir. 1998) 25

SIBIA Neurosciences, Inc. v. Cadus Pharm. Corp., 225 F.3d 1349 (Fed. Cir. 2000) 15, 20

Sakraida v. Ag Pro, Inc., 425 U.S. 273 (1976) 14, 24

In re Sastry, 285 F.3d 1378 (Fed. Cir. 2002) 19

Smith v. Goodyear Dental Vulcanite Co., 93 U.S. 486 (1876) 27, 28

Stratoflex, Inc. v. Aeroquip Corp., 713 F.2d 1530 (Fed. Cir. 1983) 29

United States v. Adams, 383 U.S. 39 (1966) 14, 15

W.L. Gore & Assocs., Inc. v. Garlock, Inc., 721 F.2d 1540 (Fed. Cir. 1983) 17

Washburn & Moen Mfg. Co. v. Beat Em All Barbed-Wire Co., 143 U.S. 275 (1892) 28

Webster Loom Co. v. Higgins, 105 U.S. 580 (1882) 27, 28

TABLE OF AUTHORITIES – Continued

Page

STATUTES

35 U.S.C. § 102 5

35 U.S.C. § 103 ..... *passim*

35 U.S.C. § 282 26

MISCELLANEOUS

Ross Kerber, *Spread the Wealth; Biotech Group Says States Need to Fund All Areas Not Just Stem Cells*, Boston Globe, Jan. 15, 2005 10

H.T. Markey, *Why Not the Statute?*, 65 J. Pat. Off. Soc'y 331 (1983) 25

NIH: Moving Research from the Bench to the Bedside: Hearings Before the Subcomm. on Health of the House Comm. on Energy and Commerce, 108th Cong., 1st Sess. 47 (2003) 9

Giles S. Rich, *Laying the Ghost of the "Invention" Requirements*, 1 Am. Pat. L. Ass'n Q.J. 26 (1972) 25

George M. Sirilla, *35 U.S.C. § 103: From* Hotchkiss *To Rich, The Obvious Patent Law Hall-Of-Famers*, 32 J. Marshall L. Rev. 437, 533 (1999) 25

Lawrence M. Sung, *On Treating Past as Prologue*, 2001 U. Ill. J.L. Tech. Pol'y 75, 88 (2001) 7

Tommy G. Thompson, *Remarks at the Milken Institute's Global Conference* (Apr. 26, 2004) 10

Tufts Center for the Study of Drug Development Pegs Cost of New Prescription Medicine at $802 Million, News Release (Tufts Center for the Study of Drug Development), Oct. 30, 2001 ..... 7, 9

BRIEF OF BIOTECHNOLOGY INDUSTRY ORGANIZATION AS *AMICUS CURIAE* IN SUPPORT OF RESPONDENTS

The Biotechnology Industry Organization respectfully submits this brief as *amicus curiae* in support of respondents in this case.[1]

INTEREST OF *AMICUS CURIAE*

The Biotechnology Industry Organization ("BIO") is the largest trade association representing the biotechnology industry. BIO has more than eleven hundred members, including businesses, academic institutions, and biotechnology centers. Its members range from the largest Fortune 500 companies to the smallest start-ups.

BIO members have great interest in this case and the standards that are applied under the Patent Act to determine whether an invention is nonobvious and therefore patentable. BIO members expand the boundaries of science on a daily basis through their research and development of biomedicine, diagnostics, agricultural, and environmental products and services. That research and development is possible because the promise under the Patent Act of exclusionary rights for a limited period of time in validly patented subject matter serves as an incentive for investment. That investment results in

---

[1] Letters from petitioner and respondents indicating their consent to the filing of *amicus* briefs have been filed with the Clerk of this Court. Pursuant to Rule 37.6, *amicus curiae* states that no counsel for a party authored this brief in whole or in part, and no person or entity other than *amicus curiae* or its counsel made a monetary contribution to the preparation or submission of this brief.

innovative products that are used to improve the quality of millions of lives worldwide.

If investors fear that marketable biotechnology patents will be prone to invalidation under a new obviousness analysis, future biotechnology innovation will suffer from less investment.

SUMMARY OF ARGUMENT

I. Members of BIO and others working in the biotechnology sector have made significant contributions to previously unimaginable research discoveries. In agriculture, the growing worldwide adoption of genetically engineered crops with insect tolerance, herbicide tolerance or virus resistance in a variety of crops like cotton, corn, soybean, papaya, potato, canola and squash, has provided increased farm production to feed and clothe the world while also benefiting farmers with higher income and the environment with reduced herbicide and pesticide use. Research into plant-based fuels provides hope that the United States can lessen its dependence upon fossil fuels by making fuel alternatives, like ethanol and bio-diesel, more affordable. And biotechnology advances in the health care industry have created new therapies to treat many diseases and to address unmet medical needs throughout the world. Biotechnology inventions of new products, tests, drugs, and cures are made every day.

The objective standards under the current case law that govern the determination of whether an invention was obvious under 35 U.S.C. § 103(a), and therefore not patentable, have a direct impact on investment incentives in biotechnology, and thus the development of the previously described innovations. If those standards were to become less objective, as petitioner proposes, increased uncertainty about the availability of patent rights would deter investment

within the biotechnology industry. That would, in turn, negatively affect public health and welfare, which benefits greatly from biotechnology innovation.

The Federal Circuit's development of the law of obviousness is consistent with the intent of Congress in the Patent Act and the precedent of this Court. It provides objective bases upon which courts and the PTO can determine whether an invention is patentable. The teaching-suggestion-motivation test is a useful and objective inquiry that appropriately guards against hindsight in addressing the question of whether a person of ordinary skill in the art would have combined prior art references.

II. Petitioner and its *amici,* however, suggest a subjective inquiry that is substantially less predictable and untethered to concrete, factual findings. Petitioner proposes to replace the precedents of this Court and the Federal Circuit with an ill-defined and unworkable "test of validity for combination patents." Br. of Pet. at 24. Rather than require that the determination of obviousness be guided by objective findings of fact and by a determination of what a person of ordinary skill in the art would have done at the time of invention, petitioner proposes an amorphous standard that would permit patent examiners and judges to decide subjectively, with the benefit of hindsight, whether the technology at issue is worthy of being declared an "invention."

Congress and this Court's precedents, however, have rejected such a subjective standard for patentability. This Court held in *Graham v. John Deere Co.*, 383 U.S. 1, 17-18 (1966), that the legal question of obviousness under 35 U.S.C. § 103 must be guided by factual inquiries into the scope and content of the prior art, the differences between the prior art and the claims, the ordinary level of skill in

the pertinent art, and considerations such as commercial success, long felt unsolved needs, and the failure of others. These *Graham* inquiries provide an objective context as to what a hypothetical person with ordinary skill in the art at the time the invention was made would have done when faced with potentially divergent prior art references. The Federal Circuit, by requiring objective evidence of a teaching, suggestion, or motivation to combine the prior art, ensures that patent examiners and courts answer this question in a reliable manner.

III. Petitioner's suggested alternatives to this Court's and the court of appeal's application of Section 103 are fraught with uncertainty and risk of error. The suggestion that there be a separate obviousness test for combination-only patents is based upon nothing more than judicial rhetoric. The post-*Graham* case law, when viewed as a whole, confirms that this Court has never adopted such an approach. Indeed, it would be nonsensical to do so because virtually all technology involves the combination of preexisting art. Thus, any combination-only nonobviousness standard would either swallow the *Graham* rule, or require patent examiners and judges to make an unguided threshold determination into why some technologies involve combinations of pre-existing art while some others do not.

Adoption of petitioner's approach would have a profound effect on the biotechnology industry. Remarkable innovations in the fields of agriculture, energy, and medicine could be rendered obvious merely because they are combinations of pre-existing elements and methods. Inventors would have no predictable defenses against infringers seeking to invalidate biotechnology inventions many years, or even decades, after the ideas were first conceived.

ARGUMENT

I. SIGNIFICANT ADVANCEMENTS THROUGH BIOTECHNOLOGY RELY UPON INVESTMENT THAT IS PREDICATED ON AN OBJECTIVE AND PREDICTABLE TEST FOR OBVIOUSNESS

A. An Obviousness Analysis That Does Not Protect Against Hindsight Bias Would Negatively Affect Biotechnology Research And Development

An invention that is novel under 35 U.S.C. § 102 is nevertheless unpatentable if the differences between it and the prior art are such that the claimed subject matter as a whole would have been obvious, at the time the invention was made, to a person having ordinary skill in the pertinent art. 35 U.S.C. § 103(a); *Graham v. John Deere Co.*, 383 U.S. 1, 13-14 (1966). Making this seemingly simple determination of what a person with ordinary skill in the art would have seen as an obvious invention can be fraught with error. To that end, this Court and the Federal Circuit have required an objective examination of the scope and content of the prior art, its differences from the claimed invention, the level of ordinary skill in the art at the time of the invention, and other objective indicia of nonobviousness in order to determine whether a hypothetical person of ordinary skill *would have* been motivated, when faced with the circumstances and obstacles at that time, to arrive at the subject matter at issue. *Graham*, 383 U.S. at 16-17.

This Court's and the Federal Circuit's obviousness analysis ensures that the patent system does not "remove existent knowledge from the public domain" or "restrict free access to material already available." *Bonito Boats, Inc. v. Thunder Craft Boats, Inc.*, 489 U.S. 141, 146 (1989). Importantly, it also ensures that the obviousness

determination is based on objective evidence and guards against the inadvertent use of hindsight when addressing patentability – recognizing the simple fact that the human mind is biased by knowledge of what has actually happened when evaluating retrospectively the likelihood of that which has happened. *Graham*, 383 U.S. at 36.

But petitioner would have this Court relax, if not abandon, these objective, factually driven inquiries. Petitioner predicates a patentability standard on its view that patent examiners and judges should determine what was obvious, and what was not, through conclusory evaluations, unsupported by contemporaneous evidence. The result of petitioner's standard, BIO submits, would be determinations of obviousness that are unpredictable and infected with hindsight bias.

Petitioner's proposed standard could have a particularly profound effect on the biotechnology industry. First, many patentable inventions in biotechnology spring from known components and methodologies found in prior art. Researchers may recognize that a prospective invention is possible or desirable. Drawing on a great abundance of existing biotechnology techniques, reagents, and structures that can be combined in novel ways, such researchers may even be able to outline a possible method of achieving the invention. Yet, while any number of such new combinations may be logical to try, most advances in biotechnology are only won through trial and error, at great effort and expense, and with only a low probability of success in achieving the claimed invention at the outset. Having an apparent method to try to make an invention should not render obvious an invention that ultimately results from that process. *See* Br. of Intellectual Property

Law Professors in Supp. of Pet. at 8; Br. of Economists and Legal Historians in Supp. of Pet. at 17.

For example, after a new virus is discovered, scientists often apply well-known techniques to attempt to create a vaccine capable of protecting the population from infection. Yet the choice of how to apply a particular known technique can be crucial, because success for an individual vaccine candidate is unpredictable. What may seem, in retrospect, to be a straightforward application of a known technique to a known virus, often proves to be, in practice, very difficult or impossible to achieve. Thus, while one might have hoped to achieve a certain result, because of the unpredictability in the field, a skilled person would not have been able to envision the complete combination of elements that later result in the claims of an issued patent. It is crucial, therefore, to examine whether the prior art suggested or taught the combination of old elements in the particular manner claimed, as the Federal Circuit requires.

Second, there often is a long "passage of time between patent application filing and litigation with biotechnology inventions [that] can exacerbate the problem" of hindsight bias. *See* Lawrence M. Sung, *On Treating Past as Prologue*, 2001 U. Ill. J.L. Tech. Pol'y 75, 88 (2001). That is, in part, because biotechnology patents often exhibit significantly longer durations of commercial utility than subject matter from the mechanical and electrical fields. *Id.* at 78-79. Although this longer commercial utility can support bigger investments in the field, *see Tufts Center for the Study of Drug Development Pegs Cost of New Prescription Medicine at $802 Million* (Tufts Center for the Study of Drug Development), Oct. 30, 2001, *available at* http://csdd.tufts.edu/NewsEvents/NewsArticle.asp?newsid=11, it also means that biotechnology patents are sometimes not challenged

until years after they reach the market, when the hindsight problem is even greater.[2]

Accordingly, the biotechnology industry relies heavily upon the nonobviousness jurisprudence of this Court and the Federal Circuit to ensure that new biotechnology innovations are objectively evaluated for patentability. Fundamental changes to the nonobviousness requirement – particularly modifications that make the analysis unpredictable and more susceptible to hindsight bias – will threaten patent protection in an important and dynamic sector of the Nation's economy.

B. Research And Development In The Biotechnology Industry Is Particularly Expensive, Time-consuming, And Presents An Unusually High-risk Investment That Relies On An Objective And Predictable Application Of Obviousness Law

Innovation in biotechnology affects many facets of human existence. For example, biotechnology research into agriculture has increased harvests worldwide through the creation of higher yield, pest and herbicide resistant crops.[3] Biotechnology is responsible for new therapies to

---

[2] By contrast, in the computer and software industries, incremental product life cycles are often measured in months. *See* Br. of Business Software Alliance in Supp. of Pet. at 10. Thus, computer and software patents often face obviousness challenges much closer in time to the date of invention, which makes such technologies significantly less prone to hindsight-biased analysis.

[3] Studies by the National Center for Food and Agricultural Policy (NCFAP) (http://www.ncfap.org/whatwedo/biotech-us.php) found that in 2004, the eleven biotechnology crop varieties adopted by U.S. growers increased crop yields by 6.6 billion pounds, provided $2.3 billion in additional net returns for U.S. growers, and reduced pesticide applications by 62.0 million pounds.

treat heart disease, cancer, AIDS, stroke, septic shock, diabetes, anemia, cystic fibrosis, multiple sclerosis, lupus, kidney disease and liver disease. Many more inventions, however, have yet to make the transition from foundational knowledge to practical and safe solutions for health, nutrition, and energy needs. The biotechnology industry is responsible for more than 20 billion dollars of annual research investment, and provides employment to hundreds of thousands of individuals.

These benefits depend upon a patent system in which the biotechnology industry and its investors need not fear that innovations will be invalidated as obvious merely because they are combinations of preexisting technologies and methods. Research and development within the industry comes at a high cost, and every idea that is funded comes with a greater risk of failure than success. Investment thus is predicated on an expected return on investment in the form of products or services that are protected by patents whose validity can be fairly determined.

For example, in the pharmaceutical industry, medical achievements are the result of extensive research and development costs. *See NIH: Moving Research from the Bench to the Bedside: Hearings Before the Subcomm. on Health of the House Comm. on Energy and Commerce*, 108th Cong., 1st Sess. 47 (2003) (testimony of Phylliss Gardner, M.D). ("The biotechnology industry is the most research and development-intensive and capital-focused industry in the world."). Virtually all of this investment is through private funding. *NIH: Moving Research from the Bench to the Bedside*, *supra*, at 49 (noting that 98 percent of research and development investment comes from the private sector). The investment that must be made to develop a single therapy is staggering – it can exceed $800 million and can take up to 14 years. *See Tufts Center for the Study of Drug*

Development Pegs Cost of New Prescription Medicine at $802 Million, News Release (Tufts Center for the Study of Drug Development), Oct. 30, 2001, *available at* http://csdd.tufts.edu/NewsEvents/NewsArticle.asp?newsid=11; *see also* Ross Kerber, *Spread The Wealth Biotech Group Says States Need To Fund All Areas, Not Just Stem Cells*, Boston Globe, Jan. 15, 2005 at F1 ("[B]iotechnology's complicated drugs can take a decade or longer to reach the market, leading to billions of dollars of annual losses for the industry.").

Such investments are risky. For every successful pharmaceutical product, thousands of candidates are designed, screened, and rejected after large investments have been made. Only a small minority of drugs that advance to human clinical trials obtain FDA approval. *See* Tommy G. Thompson, *Remarks at the Milken Institute's Global Conference* (Apr. 26, 2004), *available at* www.hhs.gov/news/speech/2004/040426.html (noting that the chances that a biopharmaceutical product will achieve FDA approval are approximately one in 5,000).

Biotechnology innovations in the fields of agriculture and energy face similar risks, which are likewise justified by the potential rewards of a marketable product with patent protection. Accordingly, changes to the nonobviousness analysis could have dramatically negative effects on biotechnology innovations if, a decade or more after money has been expended to research, test, and develop a marketable product, the product is deemed obvious based upon hindsight-driven conclusions that the product now appears unremarkable, years after it was created.

II. THE FEDERAL CIRCUIT'S APPROACH IS CONSISTENT WITH THIS COURT'S PRECEDENTS AND PROVIDES FLEXIBILITY IN DETERMINING WHETHER AN INVENTION IS OBVIOUS BASED ON OBJECTIVE EVIDENCE

There is no reason to fundamentally alter the Section 103 nonobviousness standard. That nonobviousness standard, which the Court reviews today, reflects a cautious, incremental evolution of 150 years of this Court's precedents and Congress's response. The Federal Circuit's approach, steadily developed over more than two decades, is consistent with that precedent, and requires an objective inquiry that both protects preexisting knowledge that belongs in the public domain and guards against hindsight bias that threatens future innovation.

A. Section 103(a) Requires An Objective Nonobviousness Inquiry To Avoid Hindsight Bias

1. This Court has held that the nonobviousness requirement of Section 103 is a codification of the judicially created approach first set forth in *Hotchkiss v. Greenwood*, 52 U.S. 248 (1851). In *Hotchkiss*, the Court indicated that ingenuity, rather than ordinary skill, was required for an invention to be patentable, even if novelty and utility were established. In invalidating a patent that involved the substitution of porcelain or clay for wooden or metal doorknobs, the Court held that an invention is not entitled to a patent unless it contains a "degree of skill and ingenuity [beyond that of] an ordinary mechanic acquainted with the business." *Id.* at 267.

This seemingly straightforward requirement confounded courts, patent examiners, and the patent bar for more than a century following *Hotchkiss*. In attempting to apply *Hotchkiss*, the question of what contained skill and ingenuity beyond the ordinary mechanic (*i.e.*, what was nonobvious) mutated into a subjective inquiry as to what constitutes an "invention." Through that subjective analysis, it became difficult to separate the hindsight lessons that were taught by the explanations by the inventor in the patent itself, from the actual abilities of an ordinary mechanic at the time before the invention or the patent explaining the invention was issued. Focus on what subjectively should be an "invention" thus "brought about a large variety of opinions as to its meaning both in the Patent Office, in the courts, and at the bar." *Graham*, 383 U.S. at 12. For example, in *Cuno Engineering Corp. v. Automatic Devices Corp.*, Justice Douglas's opinion for the Court rhetorically criticized the subject matter for not revealing a "flash of creative genius," 314 U.S. 84, 91 (1941), which gave rise to a perception that the manner in which an invention is arrived at is as important as whether it is novel, useful, and nonobvious.

During this same period, however, the Court recognized the dangers of hindsight bias. The Court astutely observed that "[k]nowledge after the event is always easy, and problems once solved present no difficulties." *Diamond Rubber Co. v. Consolidated Rubber Tire Co.*, 220 U.S. 428, 435 (1911).[4]

---

[4] Judge Learned Hand identified the problem of hindsight bias making inventions appear obvious after-the-fact because all inventions, at their core, are combinations of prior art, but he emphasized that such an after-the-fact perspective does not prevent an invention from being original:

> [D]efendant argues that the supposed invention is no more than a substitution of material familiar to the art in the

(Continued on following page)

2. Congress intervened in 1952 when it enacted Section 103 and statutorily mandated that patentability be governed by an objective nonobviousness standard. In *Graham v. John Deere Co.*, the Court first addressed the new statutory requirement. *Graham*, 383 U.S. at 3. The Court concluded that "[t]he major distinction" between *Hotchkiss* and Section 103 was that the statute "emphasized 'nonobviousness' as the operative test * * * rather than the less definite 'invention' language" employed in the judicial precedent. *Id.* at 14. Moreover, the Court emphasized that Congress, in enacting Section 103, sought to eliminate reliance upon any "flash of creative genius" requirement that may have stemmed from *Cuno Engineering*, *id.* at 15 & n.7, which the Court described as "rhetorical embellishment." *Ibid.*

The *Graham* Court specifically indicated the objectiveness of the inquiry under the new statutory provision by noting that, "[w]hile the ultimate question of patent validity is one of law, the § 103 condition * * * lends itself to several basic factual inquiries." *Id.* at 17. Those

---

same uses; an aggregation of which each part performs which it did before. We may concede as much arguendo, for the same may be said of every invention. All machines are made of the same elements; rods, pawls, pitmans, journals, toggles, gears, cams, and the like, all acting their parts as they always do and always must. All compositions are made of the same substances, retaining their fixed chemical properties. But the elements are capable of an infinity of permutations, and the selection of that group which proves serviceable to a given need may require a high degree of originality.

B. G. Corp. v. Walter Kiddie & Co., 79 F.2d 20, 22 (2d Cir. 1935) (Hand, J.).

factual inquiries help to ensure that determinations of nonobviousness are based upon objective rather than subjective criteria. *Ibid.* ("The emphasis on non-obviousness is one of inquiry, not quality * * *."). Under *Graham*, the determination begins with the identification of the "scope and content of the prior art"; the assessment of the "differences between the prior art and the claims"; and the ascertainment of "the ordinary level of skill in the pertinent art." *Id.* at 17-18.

To additionally guard against judicial reliance on hindsight, the Court explained that objective measures of "secondary considerations" also are relevant, such "as commercial success, long felt unsolved needs, [and] failure of others." *Ibid.*; *see also id.* at 36 ("Such inquiries * * * may also serve to 'guard against slipping into use of hindsight,' and to resist the temptation to read into the prior art the teachings of the invention in issue.") (internal citation omitted).

3. Since *Graham* this Court has not altered its approach. The Court has looked to the factual *Graham* inquiries and objective evidence, *see United States v. Adams*, 383 U.S. 39, 63 (1966); *Sakraida v. Ag Pro, Inc.*, 425 U.S. 273, 281 (1976); *Dann v. Johnston*, 425 U.S. 219 (1976), and has reiterated its admonishment that "strict observance" of these requirements is necessary. *Anderson's-Black Rock, Inc. v. Pavement Salvage Co.*, 396 U.S. 57, 62 (1969). For example, in *United States v. Adams*, 383 U.S. 39 (1966), the Court held that a water-activated, constant voltage battery was nonobvious and thus patentable. The Court rejected the argument that the battery "was not patentable because it represented either no change or an insignificant change as compared to prior battery designs." *Id.* at 48. The Court reasoned that that

obviousness argument would require a person with ordinary skill in the art to "ignore" long-accepted factors about the prior art, which would have deterred a person with ordinary skill in the art from investigating the combination used in the patent. *Ibid.*

B. The Federal Circuit's Consideration Of Whether There Is A Teaching, Suggestion, Or Motivation To Combine The Prior Art To Determine Obviousness Is Consistent With *Graham*

The Court in *Graham* understood that its approach would require development in the lower federal courts. While the Court mandated that "strict observance of the requirements" was necessary for the "uniformity and definiteness which Congress called for in the 1952 Act," the Court further recognized that there would be "difficulties in applying the nonobviousness test" which "should be amenable to a case-by-case development." *Graham*, 383 U.S. at 18.

1. Consistent with this Court's approach, the Federal Circuit makes the Section 103 obviousness determination using the *Graham* analysis. *See Alza Corp. v. Mylan Laboratories*, No. 06-1047, ___ F.3d ___, 2006 WL 2556356, at *2 (Fed. Cir. Sept. 6, 2006); *SIBIA Neurosciences, Inc. v. Cadus Pharmaceutical Corp.*, 225 F.3d 1349, 1355 (Fed. Cir. 2000). Far from departing from this Court's precedent, the court of appeals has applied *Graham* to determine "'whether a person of ordinary skill in the art, possessed with the understanding and knowledge reflected in the prior art, and motivated by the general problem facing the inventor, would have been led to make the combination recited in the claims.'" *Alza Corp.*, 2006 WL 2556356, at *3

(quoting *In re Kahn*, 441 F.3d 977, 988 (Fed. Cir. 2006)); *Pro-Mold & Tool Co. v. Great Lakes Plastics, Inc.*, 75 F.3d 1568, 1572 (Fed. Cir. 1996).

As part of that analysis, when different pieces of prior art each contain elements of an invention, the prior art can be combined to invalidate a patent on the invention only when there is some teaching, suggestion or motivation to combine the pieces of art to arrive at the claimed invention as a whole. This teaching-suggestion-motivation determination "informs the *Graham* analysis." *Alza Corp.*, 2006 WL 2556356, at *3. In other words, "[t]o reach a non-hindsight driven conclusion as to whether a person having ordinary skill in the art at the time of the invention would have viewed the subject matter as a whole to have been obvious in view of multiple references, * * * [there must be] some rationale, articulation, or reasoned basis to explain why the conclusion of obviousness is correct." *Ibid.* (quoting *In re Kahn*, 441 F.3d at 987); *see also In re Dembiczak*, 175 F.3d 994, 999 (Fed. Cir. 1999); *Interconnect Planning Corp. v. Feil*, 774 F.2d 1132, 1143 (Fed. Cir. 1985).[5] A mere recitation of the elements of an invention, combined by using the inventor's own disclosure as a roadmap, cannot make such an invention obvious. *Dembiczak*, 175 F.3d at 999.

The Federal Circuit's approach to applying *Graham* is necessary to objectively determine whether and how one

[5] Judge Hand had earlier stressed the need for courts to focus on such objective criteria. He asked questions such as "[if] the combination would have had practical value long before it appeared, if no impediment, technical, or commercial, stood in the way, if during that time others had been at work upon the same subject, and if the invention was at once accepted as an answer to the old need." *B. G. Corp. v. Walter Kiddie & Co.*, 79 F.2d 20, 22 (2d Cir. 1935) (Hand, J.).

skilled in the art would have relied upon multiple prior art references disclosing elements of a claimed invention. It is necessary to avoid the problem of hindsight bias that easily arises when one reviews a patent that lays out, in a clear and articulate manner, how the inventor created an invention. The late Chief Judge Markey explained the hindsight problem as follows: "To imbue one of ordinary skill in the art with knowledge of the invention in suit, when no prior art reference or references of record convey or suggest that knowledge, is to fall victim to the insidious effect of a hindsight syndrome wherein that which only the inventor taught is used against its teacher." *W.L. Gore & Assocs., Inc. v. Garlock, Inc.*, 721 F.2d 1540, 1553 (Fed. Cir. 1983).[6]

The Federal Circuit's approach also preserves the flexibility for case-by-case development expressly envisioned by *Graham*, including across different fields of art. The court of appeals has held that a teaching, suggestion or motivation to combine the relevant prior art "'may be implicit from the prior art as a whole, rather

---

[6] The government's claim that courts, in other contexts, can make difficult determinations that avoid hindsight misses the mark. Br. of the United States at 21. Although judges often have substantial backgrounds in determining the competency of counsel, what constitutes a reasonable use of force, and probable cause, *ibid.*, they have far less expertise in the underlying science that is often at issue in an obviousness case, particularly in many district courts where obviousness cases may seldom arise.

Indeed, perhaps the best evidence demonstrating the necessity of the teaching-suggestion-motivation test is the fact that the Federal Circuit has adopted and employed it for so long. This alone shows that that court – charged with providing consistency within a highly specialized field – views the requirement of applying *Graham* in such a manner as necessary to prevent imposition into the obviousness determination of judicial subjectivity, and ultimately hindsight-prone analyses.

than expressly stated in the references.'" *In re Kahn*, 441 F.3d at 987 (quoting *In re Kotzab*, 217 F.3d 1365, 1370 (Fed. Cir. 2000)). This inquiry requires consideration of specific references just as it requires consideration of common knowledge and common sense. *Dystar Textilfarben GmbH & Co. Deutschland KG v. C. H. Patrick Co.*, No. 06-1088, ___ F.3d ___, 2006 WL 2806466, at *11 (Fed. Cir. Oct. 3, 2006). The Federal Circuit mandates only that "rejections on obviousness grounds [ ]not be sustained by mere conclusory statements, [and that] instead, there must be *some* articulated reasoning with *some* rational underpinning to support the legal conclusion of obviousness." *In re Kahn*, 441 F.3d at 988 (emphases in original); *Cross Med. Prods., Inc. v. Medtronic Sofamor Danek, Inc.*, 424 F.3d 1293, 1322-1323 (Fed. Cir. 2005).

The Federal Circuit's approach thus requires that the decisionmaker ground its determination in specific proof, a requirement essential to the predictability of patentability. *See infra*, pages 26-30. But it does not require that the teaching, suggestion, or motivation be expressly written in the prior art, thus retaining flexibility in the form of proof utilized.

2. Contrary to claims by petitioner and its *amici*, the Federal Circuit's application of Section 103 and *Graham* has not led to the widespread creation or upholding of obvious patents. *See* Lee Petherbridge & R. Polk Wagner, *The Federal Circuit and Patentability: An Empirical Assessment of the Law of Obviousness* (Aug. 18, 2006), *available at* http://ssrn.com/abstract=923309. Precedents from biotechnology show that, in a field where building blocks for new inventions and modes for research are often disclosed in the prior art, the Federal Circuit's test has ensured that innovative subject matter receives a patent while maintaining that the merely obvious combined use of preexisting technologies does not.

For example, in *In re Sastry*, 285 F.3d 1378 (Fed. Cir. 2002), the Federal Circuit addressed a biotechnology invention relating to a HIV vaccine which comprised two main components. The first component was a peptide to stimulate certain white blood cells to activate the body's cell-mediated immune response. The second component could be an immune helper cell-stimulating peptide, or one of three peptides that inhibit the HIV-infection of white blood cells. *Id.* at 1380. The patent examiner had rejected the patent claims as obvious based on the examiner's combination of three prior art references. On appeal, Sastry argued that, although the references separately taught both the first and second component peptides of his claims, the examiner had failed to provide a specific motivation to combine these elements to arrive at his claimed invention. *Id.* at 1380-1381. The Federal Circuit disagreed, and affirmed the patent examiner's rejection, noting that one of the references "provide[d] a roadmap for combining the two peptides of Sastry's claim 1 by disclosing two peptide-based compositions that [stimulate the cell-mediated immune response] and that contain peptides that satisfy the requirements of Sastry's second peptide." *Id.* at 1381. Thus, in this case the requisite motivation to combine the prior art was found in the references themselves.

In *Alza Corp.*, 2006 WL 2556356, the court of appeals found invalid as obvious a biotechnology patent for an orally administered extended release oxybutynin formulation that could be taken once a day, and would deliver the drug to the body at specified rates. The prior art included three other patents: one that taught a sustained release formulation of oxybutynin (albeit at rates that differed from the rates of the claimed invention); and two other patents that taught general

methods for achieving the release rates claimed in the Alza patent. Alza argued that the prior art failed to provide a motivation to adapt the prior art technology to oxybutynin. The Federal Circuit found otherwise, relying on "the general understanding at the time" within the scientific community. *Id.* at *7. Accordingly, the requisite motivation to combine the prior art was found not in the references themselves, but in the background knowledge of the skilled person at the time. *See also SIBIA Neurosciences, Inc. v. Cadus Pharm. Corp.*, 225 F.3d 1349 (Fed. Cir. 2000) (finding patent obvious based upon what a person with ordinary skill in the part would have done with the prior art).

Similarly, the Federal Circuit in *In re Mayne*, 104 F.3d 1339 (Fed. Cir. 1997), found a claimed biotechnology invention to be obvious and unpatentable. The claimed invention was directed to a "fusion protein," *i.e.*, a combination of two different proteins made with recombinant DNA technology. Mayne's fusion protein was a modified growth hormone, designed to avoid the side effects of introducing engineered proteins into animals. Once administered, the fusion protein is cleaved by enzymes to release the desired growth hormone component. At the time of the invention, growth hormones were known in the prior art, as were techniques for creating fusion proteins that were similarly cleaved upon ingestion. The question was whether there existed a motivation to combine these prior art teachings to arrive at the claimed invention. The Federal Circuit found that such a motivation did exist, based on evidence showing that growth hormone fusion proteins were achievable, that Mayne's cleavage technique had been taught for use with various desirable proteins, and that any remaining

differences between Mayne's fusion protein and the prior art were insignificant.

These precedents illustrate that, far from finding no new innovations obvious, the Federal Circuit has reasonably ensured that there is an objective basis for finding a claimed invention obvious. This standard is critical in fields, such as biotechnology, where innovation is often based upon combinations of well-known components and methods of research.

C. The Federal Circuit's Judgment Below Is Consistent With This Court's Precedents

Petitioner claims that the Federal Circuit's application of Section 103(a) in this case is "in open defiance of this Court's authority," but that claim is focused solely on the nature of the particular patented invention at issue in this case. Br. of Pet. at 16. The argument ignores the court of appeals' express application of *Graham*. Pet. App. 5a (court below acknowledging that "[a] patent claim is obvious, and thus invalid, when the differences between the claimed invention and the prior art 'are such that the subject matter as a whole would have been obvious at the time the invention was made to a person having ordinary skill in the art.'") (quoting 35 U.S.C. § 103 and citing *Graham*, 383 U.S. at 14).

Petitioner also ignores the procedural posture in which the instant dispute arises. The basis for the Federal Circuit's vacatur of the district court's judgment was not that the claimed technology was nonobvious. Rather, the Federal Circuit reversed because the district court, on summary judgment, improperly made credibility determinations with respect to disputed issues of material fact pertinent to the *Graham* inquiries. *See* Pet. App. 16a.

Because the dispute was resolved by the district court on summary judgment, petitioner was required to demonstrate that there were "no genuine issues of material fact," Pet. App. 4a, taking all inferences in the light most favorable to respondent. Moreover, as a matter of substantive law, petitioner had to demonstrate that the patent was invalid for obviousness "by clear and convincing evidence." *Id.* at 5a; *see also Radio Corp. of Am. v. Radio Eng'g Labs., Inc.*, 293 U.S. 1 (1934). The critical issue is whether a genuine issue of material fact exists as to whether a person of ordinary skill in the art, at the time the invention was made, would have been motivated to combine the references to solve the problem addressed by the patent so that the invention was obvious under Section 103. Pet. App. 9a.

As to that question, KSR proffered only one declaration, which asserted nothing more than that the prior art "could have been" combined.[7] But that declaration was disputed because respondent proffered two contrary declarations as to the same issue. Pet. App. 16a. Accordingly, the district court erred when it resolved that issue on summary judgment. *See Anderson v. Liberty Lobby, Inc.*, 477 U.S. 242, 249 (1986) ("[I]t is clear * * * that at the summary judgment stage the judge's function is not himself to weigh the evidence and determine the truth of the matter but to determine whether there is a genuine issue for trial.").

---

[7] Significantly, it is unclear whether the fact that a person of ordinary skill in the art "could have" combined the pre-existing technologies is relevant to the obviousness inquiry which, by the plain language of Section 103, examines what *would have* been done. As the Federal Circuit correctly noted, "'[o]bvious to try' has long been held not to constitute obviousness." Pet. App. 15a (quoting *In re Deuel*, 51 F.3d 1552, 1559 (Fed. Cir. 1995)).

III. RETENTION OF THE *GRAHAM* FRAMEWORK IS IMPORTANT TO BIOTECHNOLOGY INNOVATION

Petitioner now purports to agree that the *Graham* analysis should be maintained, but the reasoning of its brief shows otherwise.[8] Petitioner repeatedly argues for what amounts to a more stringent standard of obviousness, particularly with respect to so-called combination patents, Br. of Pet. at 26, and contends that this Court should permit a district court to grant summary judgment on the defense of obviousness without resolving factual disputes necessary to support the conclusion because the question of patent validity is one of law. *Id.* at 38-40.

A. A Separate Test For So-Called Combination Patents Is Inconsistent With *Graham* And Should Not Be Adopted By This Court

In its petition for a writ of *certiorari*, petitioner suggested an analysis that would make it substantially easier for a patent to be invalidated on obviousness grounds. Petitioner had suggested that, "where a patent covers merely a combination of old elements, the patent will not be valid unless the combination produces 'a new or different function' or demonstrates a 'synergistic result.'" Pet. for Cert. at 14 (quoting *Anderson's-Black Rock, Inc. v. Pavement Salvage Co.*, 396 U.S. 57 (1969)); *see also*

[8] Perhaps inadvertently, the government states that "*extraordinary* skill" is required for patentability. Br. of the United States Supp. Pet. at 24. But that has never been the test under *Graham* or Section 103. This Court, and the plain language of Section 103(a), requires only that ordinary skill be the measurement as to what is obvious.

Sakraida v. Ag Pro, Inc., 425 U.S. 273 (1976); Br. of Pet. at 4-5.

Petitioner's position is now more oblique, but it still advocates for a separate, more stringent test for so-called combination patents. *See, e.g.*, Br. of Pet. at 22 n.17, 24, 26. Petitioner argues that the court of appeals has abandoned a separate standard for combination patents, *id.* at 28, and contends that the Section 103 analysis in *Anderson's-Black Rock* and *Sakraida* require some heightened showing for patentability – *i.e.*, some "synergistic result."

This argument is based upon a misreading of this Court's decisions and is inconsistent with congressional intent in enacting Section 103. The Court's use of the term "synerg[y]" was not intended to impose new standards on nonobviousness and, in fact, reflected applications of *Graham,* which, ever since it was decided, has been cited by this Court as controlling precedent. *See Anderson's-Black Rock*, 396 U.S. at 61; *Sakraida*, 425 U.S. at 280; *Dann v. Johnston*, 425 U.S. at 226. Indeed, to hold otherwise would turn back the clock nearly 50 years so that the emphasis would be on what constitutes an "invention" rather than on what is nonobvious, as required by Congress in Section 103. *Graham*, 383 U.S. at 14. [9]

---

[9] Indeed, many *amici*, including the United States, do not read *Anderson's-Black Rock* or *Sakraida* to impose any "synergistic" requirement on so-called combination patents. *See* Br. of United States in Sup. of Pet. at 14 (noting that there is no "definitive" combination test for nonobviousness); Br. of Intellectual Property Law Professors in Supp. of Pet. at 20; Br. of Ford Motor Company et al. in Supp. of Neither Party at 18; Br. of International Business Machines Corp. in Supp. of Neither Party at 14. *But see* Br. of Computer & Communications Indus. in Supp. of Pet. at 5.

In all events, outside the context of strictly mechanical inventions such as the one at issue in the instant dispute, a separate combination patent standard would be utterly unworkable. Almost all technologies involve combinations, in large part, of prior art – be it the joining of component elements or methodologies. *See In re Kotzab*, 217 F.3d 1365, 1369 (Fed. Cir. 2000); *In re Rouffet*, 149 F.3d 1350, 1357 (Fed. Cir. 1998); *see also* H.T. Markey, *Why Not the Statute?*, 65 J. Pat. Off. Soc'y 331, 333-334 (1983) ("virtually all inventions are 'combinations,' and * * * every invention is formed of 'old elements' * * * . Only God works from nothing. Man must work with old elements"). As such, any combination-only standard would either engulf the entire *Graham* inquiry by applying to almost all circumstances, or it would require patent examiners and courts to make and justify threshold determinations into which combinations of prior art should be subject to a more stringent standard of patentability (as suggested by petitioner) and which ones should not be. *See* George M. Sirilla, *35 U.S.C. § 103: From Hotchkiss To Rich, The Obvious Patent Law Hall-Of-Famers*, 32 J. Marshall L. Rev. 437, 533 (1999) ("How can judges and patent examiners distinguish a combination patent from a regular one? Even if a distinction between the types of patents exists, what test would satisfy a nebulous 'synergism' requirement? Judge Rich denounced such a synergism requirement. 'The laws of physics and chemistry in accordance with which all inventions perform do not permit of judicially imagined magic accordingly to which 2+2=5. Wherever such a spurious test prevails all patents are invalid.'") (quoting Giles S. Rich, *Laying the Ghost of the "Invention" Requirement*, 1 Am. Pat. L. Ass'n Q. J. 26, 44 (1972)).

B. *Graham*'s Emphasis On Factual Findings And Secondary Considerations Promotes Objectivity And Must Be Maintained

Petitioner's argument, focusing merely on its view that the technology at issue in the challenged patent is "simple and ubiquitous," Br. of Pet. at 6, would have this Court return the patent system to the era before the enactment of Section 103 and before *Graham*'s holding that the legal question of obviousness be firmly grounded in factual determinations. Petitioner argues, in effect, that obviousness can be resolved without rigorous inquiry in order to avoid the "burdens flow[ing] from the extremely high cost of litigating a patent case." *Id.* at 32.

However, the factual determinations that are part of the obviousness analysis as required by *Graham* bolster innovation by creating more objective certainty in the patent system.[10] That predictability attracts private resources to fund research and development, which in the biotechnology field comes at great cost. Accordingly, petitioner's request to reduce the burden and cost of litigation over obviousness issues will unquestionably

---

[10] In the prosecution of a patent application before the United States Patent and Trademark Office ("PTO"), factual findings are critical to the nonobviousness inquiry. Patents are granted by the PTO only after one of its examiners, who possesses specific expertise in the technological field at issue, undertakes a detailed examination of the technology and prior art. The underlying factual findings of the PTO in the Section 103 analysis are thus necessary for proper judicial review, and afforded appropriate deference, under the Administrative Procedures Act's substantial evidence standard. *Dickinson v. Zurko*, 527 U.S. 150 (1999). It is for this reason that Congress required that patents that have undergone such rigorous assessment "shall be presumed valid," 35 U.S.C. § 282, and cannot be lightly overturned based upon speculation detached from any objective criteria.

have a collateral, negative consequence on the public welfare, which it nowhere acknowledges.

Graham's emphasis on secondary considerations in evaluating nonobviousness is similarly critical. Oftentimes, objective evidence of why a patent may be nonobvious is derived from secondary considerations, such "as commercial success, long felt but unsolved needs, [and the] failure of others." *Graham*, 383 U.S. at 17. For nearly 150 years, these secondary considerations have been part of this Court's nonobvious analysis. *Ibid*; *Smith v. Goodyear Dental Vulcanite Co.*, 93 U.S. 486 (1877); *Webster Loom Co. v. Higgins*, 105 U.S. 580 (1882); *Magowan v. New York Belting & Packing Co.*, 141 U.S. 332 (1891).

That is because the commercial success of an invention sought to be patented suggests it was nonobvious or else someone would have developed it earlier as an obvious means of further profit from the prior art. A long felt unsolved need in an area similarly suggests that an invention that comes along to meet the need was nonobvious or else others would have long ago developed it. And, the failure of others, of course, serves as a strong objective indication that an invention was not obvious or else others would not have met failure when they tried to develop it.

Thus, in *Goodyear Dental Vulcanite*, this Court recognized that an invention for dentures that substituted rubber for metal and other materials was patentable, in part because,

> To find a material, with a mode of using it, capable of being combined with the teeth in such a manner as to be free from the admitted faults of all other known combinations, had been an object long and earnestly sought. It had been a subject for frequent discussion among dentists

> and in scientific journals. The properties of vulcanite were well known; but how to make use of them for artificial sets of teeth remained undiscovered, and apparently undiscoverable, until [the inventor] revealed the mode. But when revealed its value was soon recognized, and no one seems to have doubted that the resulting manufacture was a new and most valuable invention.

93 U.S. at 494; *see also Webster Loom*, 105 U.S. at 591 (noting commercial success in concluding that a loom improvement combining preexisting devices was patentable); *Magowan*, 141 U.S. at 343 (noting that "as a fact not to be overlooked, and having much weight, that the [invention] went at once into such an extensive public use as almost to supersede all packings made under other methods, and that that fact was pregnant evidence of its novelty, value, and usefulness").

There is no basis for the Court now to disregard these important and objective indicia of nonobviousness, which are well-grounded in precedent. As a component of the *Graham* analysis, the secondary considerations provide context to Section 103 by providing the decisionmaker with an objective understanding of how the invention has changed its relevant field. Indeed, the secondary considerations often provide the necessary background as to why, or why not, well-known elements in the relevant scientific community were not before combined with success.[11]

---

[11] To effect this goal, this Court has ensured that the secondary considerations are relevant to the Section 103 analysis by requiring a nexus between the patent at issue and the evidence proffered in support of the secondary considerations. *Washburn & Moen Mfg. Co. v. Beat 'Em All Barbed-Wire Co.*, 143 U.S. 275 (1892); *McClain v.*

(Continued on following page)

Concrete factual findings and secondary considerations must continue to play a prominent role in establishing nonobviousness. Requiring the legal determination of obviousness to be based upon concrete facts will ensure that courts measuring the prior art and the expertise of a person with ordinary skill in the art will not take for granted the difficulties of combining well-known divergent elements and methodologies for new uses. Similarly, courts, when faced with technologies based upon prior art, will remain compelled to examine the context in which the invention was created, including long unmet needs in the field, past failures, and the extent of the patent's commercial success.

In sum, the instant dispute could easily affect the course of innovation in the life sciences. Biotechnologies such as inhalable insulin which allows millions of patients to forego frequent and painful needle sticks, drug-eluting stents which help avoid coronary artery reclosures, or environmental and agricultural innovations that have resulted in affordable bio-ethanol or enhanced biotechnology animal feeds, are all essentially based upon molecules, ideas, and methodologies that were known to some degree to the pertinent scientific community. After their widespread adoption, many such inventions come to be taken for granted, and may in retrospect even appear unremarkable to an accepting public. Without a nonobviousness standard that is firmly grounded in fact to

---

Ortmayer, 141 U.S. 419, 428 (1891) (discounting the commercial success where there was no showing that the sales were due to the ingenuity of the subject matter rather than the "energy" by which they were marketed); *Stratoflex, Inc. v. Aeroquip Corp.*, 713 F.2d 1530, 1539 (Fed. Cir. 1983).

guard against the temptation of hindsight, many such future inventions may never see the light of day.

CONCLUSION

For the reasons set forth above, the judgment of the court of appeals should be affirmed.

Respectfully submitted,

THOMAS DILENGE
HANS SAUER
BIOTECHNOLOGY INDUSTRY ORGANIZATION
1225 Eye Street, NW,
Suite 400
Washington, DC 20005

BETH S. BRINKMANN
Counsel of Record
SETH M. GALANTER
BRIAN R. MATSUI
MORRISON & FOERSTER LLP
2000 Pennsylvania Ave., NW
Washington, DC 20006
(202) 887-1544

MATTHEW I. KREEGER
MORRISON & FOERSTER LLP
425 Market Street
San Francisco, CA 94105
(415) 268-6000

Counsel for Biotechnology Industry Organization as amicus curiae

OCTOBER 16, 2006

1370

(40)

No. 04-1350

FILED
OCT 16 2006
OFFICE OF THE CLERK
SUPREME COURT, U.S.

IN THE

Supreme Court of the United States

KSR INTERNATIONAL CO.,

Petitioner,

v.

TELEFLEX INC. and
TECHNOLOGY HOLDING CO.,

Respondents.

ON WRIT OF CERTIORARI TO THE
UNITED STATES COURT OF APPEALS
FOR THE FEDERAL CIRCUIT

BRIEF OF BUSINESS AND LAW PROFESSORS AS *AMICI CURIAE* IN SUPPORT OF THE RESPONDENTS

F. SCOTT KIEFF
SCHOOL OF LAW
WASHINGTON UNIVERSITY
IN ST. LOUIS
Campus Box 1120
One Brookings Drive
St. Louis, MO 63130
(314) 935-5052

CHRISTOPHER A. COTROPIA
Counsel of Record
UNIVERSITY OF RICHMOND
SCHOOL OF LAW
28 Westhampton Way
Richmond, VA 23173
(804) 484-1573

(Additional Counsel Listed on Inside Cover)

October 16, 2006

GREGORY N. MANDEL
ALBANY LAW SCHOOL
80 New Scotland Avenue
Albany, NY 12208
(518) 445-3303

R. POLK WAGNER
UNIVERSITY OF PENNSYLVANIA
LAW SCHOOL
3400 Chestnut Street
Philadelphia, PA 19104
(215) 898-4356

MARK A. LEMLEY
STANFORD LAW SCHOOL
CROWN QUADRANGLE
559 Nathan Abbott Way
Stanford, CA 94305
(650) 723-4605

TABLE OF CONTENTS

	Page
TABLE OF AUTHORITIES	iii
INTEREST OF AMICI CURIAE	1
SUMMARY OF ARGUMENT	1
ARGUMENT	2
I. THE "TEACHING, SUGGESTION, OR MOTIVATION TO COMBINE" ANALYSIS IS A FLEXIBLE, TECHNOLOGICALLY-FOCUSED MEANS OF IMPLEMENTING THE *GRAHAM* FRAMEWORK	2
A. *The TSM Test is Focused on the Key Aspect of the* Graham *Inquiry*	3
B. *Most Court of Appeals Cases Cited in Opposition to the TSM Analysis are Misread*	10
C. *If the Court of Appeals has Implemented the Analysis Incorrectly, then this Court Should Clarify the Doctrine Rather than Abandon It*	12
II. THE COURT OF APPEALS' JURISPRUDENCE IS CONSISTENT WITH THE PATENT ACT AND THE COURT'S INTERPRETATION THEREOF	13
A. *The Patent Act Clearly Establishes the Person Having Ordinary Skill in the Art as the Measure of Innovation*	13
B. *The Court Has Not Varied Its Approach to Section 103*	16

TABLE OF CONTENTS

Page

C. *The TSM Test is Fully Consistent with the Court's Precedents.* 19

III. DETERMINING WHETHER A "TEACHING, SUGGESTION, OR MOTIVATION TO COMBINE" EXISTS IS BETTER THEN ANY PROPOSED ALTERNATIVE FRAMEWORK..... 20

A. *TSM's Framework Combats Hindsight Bias While Alternatives Cater to It*..... 21

B. *In Contrast to the Proposed Alternatives, TSM Provides Some Structure and Certainty to a Difficult Inquiry*..... 26

CONCLUSION..... 30

APPENDIX..... 1a

TABLE OF AUTHORITIES

Page

CASES:

Alza Corp. v. Mylan Labs., Inc., No. 06-1019 (Fed. Cir. Sept. 6, 2006) 5, 6, 24

Anderson's-Black Rock v. Pavement Salvage, Co., 396 U.S. 57 (1969) 4, 16-17

Ashland Oil, Inc. v. Delta Resins & Refractories, Inc., 776 F.2d 281 (Fed. Cir. 1985)..... 6

Baltimore & Ohio R.R. Co. v. Aberdeen & Rockfish R.R. Co., 393 U.S. 87 (1968)..... 11

Beattie, In re, 974 F.2d 1309 (Fed. Cir. 1992) 9-10

Bonito Boats, Inc. v. Thunder Craft Boats, Inc., 489 U.S. 141 (1989) 23

Brown v. Brock, 240 F.2d 723 (4th Cir. 1957) 14

Central Va. Community College v. Katz, 126 S.Ct. 990 (2006) 16

Champion Spark Plug Co. v. Gyromat Corp., 603 F.2d 361 (2d Cir. 1979) 18

Clay, In re, 966 F.2d 656 (Fed. Cir. 1992)..... 5, 6

Cross Med. Prods., Inc. v. Medtronic Sofamor Danek, Inc., 424 F.3d 1293 (Fed. Cir. 2005)..... 9

Custom Accessories, Inc., v. Jeffery-Allan Indus., Inc., 807 F.2d 955 (Fed. Cir. 1986)..... 5, 6

Dann v. Johnston, 425 U.S. 219 (1976) 19, 26

Dembiczak, In re, 175 F.3d 994 (Fed. Cir. 1999)..... 6, 11

Dickinson v. Zurko, 527 U.S. 150 (1999)..... 9, 12-13

Page

CASES – CONTINUED:

DyStar Textilfarben GmbH & Co. Deutschland KG v. C.H. Patrick Co., No. 06-1088 (Fed. Cir. Oct. 3, 2006) 5, 6

Ecolochem, Inc. v. S. Cal. Edison Co., 227 F.3d 1361 (Fed. Cir. 2000) 9

Festo Corp. v. Shoketsu Kinzoku Kogyo Kabushiki Co., 535 U.S. 722 (2002) 13, 27

Graham v. Conner, 490 U.S. 386 (1989) 22

Graham v. John Deere, 383 U.S. 1 (1966) ..... *passium*

Great Atlantic Tea & Pacific Tea Co. v. Supermarket Equip. Corp., 340 U.S. 147 (1950) 14-15

Harris, In re, 409 F.3d 1339 (Fed. Cir. 2005) 7

Hazeltine Research v. Brenner, 383 U.S. 252 (1965) 5

Hewlett-Packard Co., v. Mustek Sys., 340 F.3d 1314 (Fed. Cir. 2003) 7

Hotchkiss v. Greenwood, 52 U.S. (11 How.) 248 (1850) 13-14

Jones, In re, 958 F.2d 347 (Fed.Cir.1992) 6

Kahn, In re, 441 F.3d 977 (Fed. Cir. 2006)... 5, 6, 9, 11, 23

Kotzab, In re, 217 F.3d 1365 (Fed. Cir. 2000) 11

Lee, In re, 277 F.3d 1338 (Fed. Cir. 2002) 8, 11

Loom Co. v. Higgins, 105 U.S. 580 (1882) 22

Page

CASES – CONTINUED:

Lyon v. Bausch & Lomb Optical Co., 224 F.2d 530 (2d Cir. 1955) 14

Markman v. Westview Instruments, 517 U.S. 370 (1996)..... 10

Monroe Auto Equip. Co. v. Heckethorn Mfg. & Supply Co., 332 F.2d 406 (6th Cir. 1964)..... 21

Motorola, Inc. v. Interdigital Tech. Corp., 121 F.3d 1461 (Fed. Cir. 1997)..... 6

Mott Corp. v. Sunflower Indus., Inc., 314 F.2d 872 (10th Cir. 1963)..... 14

Nilssen, In re, 851 F.2d 1401 (Fed. Cir. 1988)..... 6

Oddzon Prods. Inc., v. Just Toys, Inc., 122 F.3d 1396 (Fed. Cir. 1997) 5

Para-Ordnance Mfg., Inc. v. SGS Importers Int'l, Inc., 73 F.3d 1085 (Fed. Cir. 1995)..... 5, 6

Peterson, In re, 315 F.3d 1325 (Fed. Cir. 2003)..... 7

Princeton Biochemicals, Inc. v. Beckman Coulter, Inc., 411 F.3d 1332 (Fed. Cir. 2005)..... 9

Printz v. United States, 521 U.S. 898 (1977) 16

Pro-Mold & Tool Co., Inc. v. Great Lakes Plastics, Inc., 75 F.3d 1568 (Fed. Cir. 1996)..... 6

R.M. Palmer Co. v. Luden's, Inc., 236 F.2d 496 (3d Cir. 1956)..... 14

Reiner v. I. Leon Co., 285 F.2d 5011 (2d Cir. 1960) 14

Page

Rengo Co. v. Molins Mach. Co., 657 F.2d 535 (3rd Cir. 1981) 18

Republic Indus., Inc., v. Schlage Lock Co., 592 F.2d 963 (7th Cir. 1979) 17-18

Rinehart, In re, 531 F.2d 1048 (C.C.P.A.1976) 6

Rouffet, In re, 149 F.3d 1350 (Fed. Cir. 1998) 5, 6, 11

S.E.C. v. Edwards, 540 U.S. 389 (2004) 16

Safety Car Heating & Lighting Co. v. General Elec. Co., 155 F.2d 937 (2d Cir. 1946) 15

Sakraida v. Ag. Pro, Inc., 425 U.S. 282 (1976) 4, 16-17

Strickland v. Washington, 466 U.S. 668 (1984) 22

U.S. Bancorp Mortgage Co. v. Bonner Mall Partnership, 513 U.S. 18 (1994) 16

United States v. Adams, 383 U.S. 39 (1967) 4, 14

Valmet Paper Mach., Inc., v. Beloit Corp., 105 F.3d 1409 (Fed. Cir. 1997) 7

UNITED STATES CONSTITUTION, STATUTES AND LEGISLATIVE MATERIALS:

U.S. Const. Art. I, § 8, cl. 8 23

35 U.S.C. § 103 ..... *passium*

35 U.S.C. § 282 25

35 U.S.C.A. 1 (1954) 15

H.R. Rep. No. 82-1923 (1952) 26

S. Rep. No. 82-1979 (1952) 26

Page

ADDITIONAL SOURCES:

Christopher A. Cotropia, *Patent Law Viewed Through an Evidentiary Lens: The "Suggestion Test" as a Rule of Evidence*, 2006 BYU L. Rev. ___ (forthcoming 2006), available at http://ssrn.com/abstract=893965 ..... 12, 24

Christopher A. Cotropia, *Nonobviousness and the Federal Circuit: An Empirical Analysis of Recent Case Law*, 82 Notre Dame L. Rev. __ (forthcoming 2007), available at http://ssrn.com/abstract=933192 28-29

C. Marshall Dann, *Examination of Claims for Patentability Under 35 U.S.C. 103*, 949 U.S. Pat. & Trademark Off. Gazette 3 (1976) 17-18

Baruch Fischoff, *For Those Condemned to Study the Past: Heuristics and Biases in Hindsight, in Judgment Under Uncertainty: Heuristics and Biases* (Kahneman et al. eds., 1982) 22

F. Scott Kieff, *How Ordinary Judges and Juries Decide the Seemingly Complex Technological Questions of Patentability over the Prior Art, in Perspectives on Properties of the Human Genome Project* (Kieff ed., Academic Press 2003) 30

F. Scott Kieff, *The Case for Registering Patents and the Law and Economics of Present Patent-Obtaining Rules*, 45 B.C. L. Rev. 55 (2003) 27

Page

ADDITIONAL SOURCES – CONTINUED:

Gregory Mandel, *Patently Non-Obvious: Empirical Demonstration that the Hindsight Bias Renders Patent Decisions Irrational*, 67 Ohio St. L.J. ___ (forthcoming 2006), available at http://ssrn.com/abstract=871684 22

Gregory Mandel, *Patently Non-Obvious II: Experimental Study on the Hindsight Issue before the Supreme Court*, 9 Yale J. of L. & Tech. ___ (forthcoming 2006), available at http://ssrn.com/abstract_id=928662 ..... 21, 24

Robert Merges and John Duffy, *Patent Law and Policy: Cases and Materials* (3d ed. 2002) 5

Sean M. McEldowney, *New Insights on the "Death" of Obviousness: An Empirical Study of District Court Obviousness Opinions*, 2006 Stan. Tech. L. Rev. 4. 24

Lee Petherbridge and R. Polk Wagner, *The Federal Circuit and Patentability: An Empirical Assessment of the Law of Obviousness*, 85 Tex. L. Rev. __ (forthcoming 2007) available at http://ssrn.com/abstract=923309 ..... 7, 9, 28

Giles S. Rich, *Laying the Ghost of the "Invention" Requirement*, 1 Am. Pat. L. Ass'n Q. J. 26 (1972)..... 15

Rene D. Tegtmeyer, *Commercial Success and Other Considerations Bearing on Obviousness*, 973 Official Gazette 34 (1978)..... 18

INTEREST OF *AMICI CURIAE*

Amici are scholars at American business and law schools who teach, write about, or have an interest in patents and intellectual property law. Amici have no stake in the outcome of this case.[1] We are, however, interested in assisting this Court to interpret the law in a way that is both consistent with the intent of Congress and that best promotes the development and disclosure of new and non-obvious inventions. A list of amici is appended to the signature page. Both petitioner and respondents have filed blanket consents to the filing of amicus briefs.

SUMMARY OF ARGUMENT

The "teaching, suggestion, or motivation to combine" analysis, developed pursuant to the Court's decisions interpreting section 103 of the Patent Act, has been badly mischaracterized, misunderstood, and misread by Petitioner and supporting amici. In this brief, we directly address their main contentions and seek to clarify the policy, premise, and jurisprudence that underlies this well-established analytic framework. We first refute the claims, made especially by the Solicitor General, that the "teaching, suggestion or motivation to combine" analysis is rigid, narrow, and ignores relevant information. To the contrary, this approach is firmly grounded in the Court's interpretation of the Patent Act, and implements Graham's requirement for detailed factual analysis of the intellectual and technological context of an invention. Second, we demonstrate that the Court of Appeals

---

[1] Pursuant to Rule 37.6, amici represent that this brief was not authored in whole or in part by counsel for any party, and that no person or entity other than amici and their respective educational institutions has made a monetary contribution to the preparation or submission of this brief.

jurisprudence is fully consistent with the Court's post-Graham decisions in this area. And third, we argue that that the Petitioners and supporting amici fail to meaningfully address the Court's admonishment that the nonobviousness analysis must address the very real problem of hindsight bias that is inherent in the obviousness determination, which lies at the core of the patent law. Indeed, we show that the Court of Appeals' approach is significantly better than any of the alternatives proposed in this case, most of which either ignore the problem or actually increase the likelihood of error, confusion, and unpredictability in nonobviousness decisions. We conclude that while the analysis is imperfect, and aspects of the Court of Appeals' caselaw should be clarified, this approach provides the best available analytic framework for implementing the statutory and constitutional goals of the nonobviousness requirement.

ARGUMENT

I. THE "TEACHING, SUGGESTION, OR MOTIVATION TO COMBINE" ANALYSIS IS A FLEXIBLE, TECHNOLOGICALLY-FOCUSED MEANS OF IMPLEMENTING THE *GRAHAM* FRAMEWORK

One of the misunderstandings of the law perpetuated by several briefs filed in this case is that the "teaching, suggestion, or motivation to combine" ("TSM") test is a rigid and restrictive formulation that ignores important information concerning the obviousness of an invention.[2] Instead, as we demonstrate below, the TSM test, properly understood, embraces precisely the information outlined by this Court in *Graham v. John Deere*, 383 U.S. 1 (1966). There is nothing in the premise of the TSM approach—and very little in the

---

[2] *See, e.g.*, Br. of U.S., at 17-20; Br. of Intell. Prop. L. Prof., at 10-12.

Court of Appeals' articulation of that doctrine—that supports the view that the analysis ignores relevant factual information. Indeed, we suggest that most of the Court of Appeals' cases cited by Petitioner and supporting amici in this case are misread as requiring a rigid or narrow analysis, when in fact they support a broader understanding of that court's doctrinal approach. Finally, we note that if the varying articulations of this approach in the Court of Appeals leads to confusion or suggests a lack of flexibility, then this Court should not abandon the test, but instead take the opportunity to clarify that the TSM analysis—as a component of the framework laid down in *Graham*—embraces all relevant factual information underlying the legal inquiry into obviousness under 35 U.S.C. § 103.

A. The TSM Test is Focused on the Key Aspect of the Graham *Inquiry*

The Patent Act's restriction against patenting inventions that "would have been obvious at the time the invention was made to a person having ordinary skill in the art to which said subject matter pertains" imposes a defined level of inventiveness as the hurdle for patentability. *See* 35 U.S.C. § 103 (2004), *Graham*, 383 U.S. at 14. In *Graham*, this Court outlined the three core factual inquiries underlying this legal question: the level of ordinary skill in the art; the scope and content of the prior art; and the differences between the prior art and the invention. *Id.* at 18.

1. The *Graham* inquiry, then, directs courts to closely analyze the intellectual context surrounding the creation of an invention. As *Graham* notes, in order to remain faithful to the language of § 103, this intensely factual inquiry is bounded in at least three dimensions: intellectually, by the ability of those of "ordinary skill" in the field; temporally, by the date of invention; and technologically, by the scope of the relevant prior art. *See* 383 U.S. at 18. Over decades of application of the *Graham* analysis to the enormous range of

subject matters embraced by the modern patent law, the courts have recognized that, given fidelity to the boundaries noted above, the key intellectual inquiry supporting § 103 is not merely whether a invention can be cobbled together from discrete components found in the prior art, but whether a person of ordinary skill would have been likely to do so at the time the invention was made. *See, e.g., United States v. Adams*, 383 U.S. 39, 51-52 (1967) ("Despite the fact that each of the elements of the Adams battery was well known in the prior art, to combine them as did Adams required that a person reasonably skilled in the prior art must ignore [the then-extant teachings of the field]"); *Anderson's-Black Rock v. Pavement Salvage, Co.*, 396 U.S. 57, 60 (1969) ("We conclude that the combination was reasonably obvious to one with ordinary skill in the art."); *Sakraida v. Ag. Pro, Inc.*, 425 U.S. 282, (1976) ("[T]his particular use of the assembly of old elements would be obvious to any person skilled in the art of mechanical application."). This is the basis of the Court of Appeals' modern TSM inquiry, which lays bare the core factual components of the *Graham* framework—to enable judicial application of the obviousness prohibition.

The premise of the TSM analysis relies on flexibility, and embraces all relevant information—subject only to the boundaries established by *Graham* and the text of § 103. As a matter of technological fact, it is clear that a teaching, suggestion, or motivation to combine references may come from any source, be it explicit and direct (such as statements in the prior art or evidence of the knowledge and skill in the field), or implicit or circumstantial (such as unstated suggestions in the prior art or the nature of the problem solved by the invention). In our view, the best reading of the Court of Appeals' doctrine reflects an adherence to this principle, as we explain more fully below.[3]

---

[3] Indeed, we note that the Federal Circuit has taken the opportunity on three occasions this year to emphasize this aspect of its TSM doctrine.

2. The role of the TSM analysis in the § 103 inquiry must also be understood in context. The approach does not exist in a vacuum, but instead is a component of a flexible, technologically-sensitive approach to implementing *Graham's* mandate to investigate the intellectual context of an invention. For example, the law assumes that a person of skill in the relevant art will know of and understand all prior art references, their explicit and inherent teachings, and the various ways in which they might be combined.[4] Furthermore, the Court of Appeals has defined the scope of the relevant prior art broadly, encompassing not only art that is related to the field of the invention, but art from disparate fields that is relevant to the intellectual context.[5] Placing these doctrinal constructs next to the TSM analysis results in a framework for the technological inquiry underpinning § 103 that:

1. Sweeps in all prior art relevant to the invention;[6]

See In re Kahn, 441 F.3d 977 (Fed. Cir. 2006); *Alza Corp. v. Mylan Labs., Inc.*, No. 06-1019 (Fed. Cir. Sept. 6, 2006); *DyStar Textilfarben GmbH & Co. Deutschland KG v. C.H. Patrick Co.*, No. 06-1088 (Fed. Cir. Oct. 3, 2006).

[4] *See, e.g., In re Rouffet*, 149 F.3d 1350, 1357 (Fed. Cir. 1998) (the law "presumes all prior art references in the field of invention are available to this hypothetical skilled artisan."); *Para-Ordnance Mfg., Inc. v. SGS Importers Int'l, Inc.*, 73 F.3d 1085, 1088-89 (Fed. Cir. 1995); *Custom Accessories, Inc., v. Jeffery-Allan Indus., Inc.*, 807 F.2d 955, 962 (Fed. Cir. 1986) ("The [PHOSITA] is presumed to be aware of all the pertinent prior art.").

[5] *See, e.g., In re Clay*, 966 F.2d 656 (Fed. Cir. 1992). *See also*, Robert Merges and John Duffy, *Patent Law and Policy: Cases and Materials* 803 (3d ed. 2002) (noting that the court's broad 'problem-solving' approach "is consistent with the actual practice and experience of inventors.")

[6] *See, e.g., Hazeltine Research v. Brenner*, 383 U.S. 252 (1965) (extending § 103 prior art to include patents applied-for, but not issued); *Oddzon Prods. Inc., v. Just Toys, Inc.*, 122 F.3d 1396 (Fed. Cir. 1997) (extending the definition of prior art under § 103 to encompass material

2. Attributes to the person of skill in the art knowledge of both the explicit and inherent teachings of the art;[7]

3. Embraces any evidence of suggestive combinations, regardless of source.[8]

It is therefore simply erroneous to understand the TSM analysis as imposing a limited, narrow, or exclusionary inquiry to the judicial determination of nonobviousness.

We do not suggest, of course, that the TSM approach is unbounded. Rather, its boundaries (intellectual, temporal, and technological, as noted above) are precisely those established by the Patent Act in section 103, and defined by this Court in *Graham* and its progeny. Thus, a suggestion to combine (like any element of the prior art) that arises after the date of invention is impermissible, as is such information that is unconnected to the intellectual or technological subject matter of the invention. These limits, however, are not those of the TSM analysis, but those established as a matter of the overall section 103 inquiry.

3. Under this conception, the TSM analysis is an important and necessary component of the overall *Graham* framework, rather than the "exclusive test for

---

derived from another under § 102(f)); *In re Clay*, 966 F.2d 656 (Fed. Cir. 1992) (defining the 'analogous arts' analysis).

[7] *See, e.g., Rouffet*, 149 F.3d at 1357; *Para-Ordnance Mfg.*, 73 F.3d at 1088-89; *Custom Accessories*, 807 F.2d at 962.

[8] *See, e.g., DyStar*, No. 06-1088, (Fed. Cir. Oct. 3, 2006); *Alza Corp.*, No. 06-1019 (Fed. Cir. Sept. 6, 2006); *Kahn*, 441 F.3d 977 (Fed. Cir. 2006); *In re Dembiczak*, 175 F.3d 994, 999 (Fed. Cir. 1999); *Motorola, Inc. v. Interdigital Tech. Corp.*, 121 F.3d 1461, 1472 (Fed. Cir. 1997), *Pro-Mold & Tool Co., Inc. v. Great Lakes Plastics, Inc.*, 75 F.3d 1568, 1573 (Fed. Cir. 1996); *In re Jones*, 958 F.2d 347, 351 (Fed. Cir. 1992); *In re Nilssen*, 851 F.2d 1401, 1403 (Fed. Cir. 1988); *Ashland Oil, Inc. v. Delta Resins & Refractories, Inc.*, 776 F.2d 281, 297 n. 24, (Fed. Cir. 1985); *In re Rinehart*, 531 F.2d 1048, 1054 (C.C.P.A.1976).

nonobviousness," as it is characterized by the Solicitor General's brief. *See Brief of United States*, at 16. Its utility lies in a focus on the key factual inquiry necessary to evaluate compliance with section 103—the contemporaneous learning in the field of the invention, which necessarily includes both the content of the prior art as well as the then-extant knowledge and ability of those working in the field. In many cases, especially where a single source of prior art rather than a combination of references is used to determine obviousness, the TSM analysis may not be especially useful. Properly understood, the Court of Appeals' doctrine fully reflects this understanding.[9]

We also strongly disagree with the claims about both the premise and precedent of the TSM requirement made by several briefs filed in this case. We especially note that the United States' brief appears to misunderstand or misstate aspects of the patent law. First, we have already noted the factual error in the Solicitor General's claim of exclusivity for the TSM approach. That error is, unfortunately, compounded by that brief's repeated reference to the TSM

---

[9] *See, e.g., In re Harris*, 409 F.3d 1339, 1341-43 (Fed. Cir. 2005) (affirming the Board's determination of obviousness without analyzing a TSM); *Hewlett-Packard Co., v. Mustek Sys.*, 340 F.3d 1314, 1326-27 (Fed. Cir. 2003) (affirming jury verdicts relating to obviousness without addressing a TSM); *In re Peterson*, 315 F.3d 1325, 1329-30 (Fed. Cir. 2003) (affirming the Board's determination of obviousness without analyzing TSM); *Valmet Paper Mach., Inc.v, v. Beloit Corp.*, 105 F.3d 1409, 1413 (Fed. Cir. 1997) (finding an invention obvious without addressing TSM).

Indeed, a systematic study of the Federal Circuit's obviousness jurisprudence since 1990, finds that the TSM analysis is used in slightly less than half of the cases (45%), though the incidence of this analysis has been increasing markedly. *See* Lee Petherbridge and R. Polk Wagner, *The Federal Circuit and Patentability: An Empirical Assessment of the Law of Obviousness*, 85 Tex. L. Rev. __ (forthcoming 2007) at 5, 47-48, available at http://ssrn.com/abstract=923309.

analysis as being rigid and inflexible (a rhetorical flourish shared by other briefs). As explained at length above, this characterization of the boundaries of the TSM analysis reflects a fundamental misunderstanding of this Court's *Graham* framework, which is itself faithful to the language of section 103. Indeed, the Solicitor General's disapproval of the Court of Appeal's requirement, *see Brief of United States* at 18, 19, that evidentiary showings be made in connection with the obviousness analysis speaks to a desire for this Court to revisit *Graham's* interpretation of the Patent Act, not an indictment of the Court of Appeal's doctrine. *See Graham*, 383 U.S. at 18 (noting the evidentiary underpinnings of nonobviousness). Likewise puzzling is the Solicitor General's unsupported conjecture that "the factual showing that [the TSM analysis] requires may be difficult or impossible to make[.]" *See Brief of United States at 19.* If, indeed, a combination of prior art elements would be "readily apparent" to those of ordinary skill in the art, then TSM explicitly provides for consideration of this evidence pursuant to its "knowledge of a person of ordinary skill in the art" prong—and the process by which one might bring this information to courts' attention (affidavits, witness testimony, etc.) are certainly no mystery. And if the Solicitor General's concern is based on a perceived difficulty for the USPTO in accessing non-textual sources in order to demonstrate a suggestion to combine, then this, once again, reflects a misunderstanding of the TSM analysis, which encompasses the appropriate application of the USPTO's technical expertise.[10] As we note below, it may well be that

---

[10] Indeed, even in those cases highlighted by petitioner and amici as demonstrating the harmful effects of the TSM analysis on the USPTO, the Court of Appeals has made crystal clear that agency technical expertise, if properly placed in the record of the proceedings, is an appropriate source for a TSM analysis. *See, e.g., In re Lee*, 277 F.3d 1338, 1344 (Fed. Cir. 2002).

the Federal Circuit in the past has been too reluctant to credit agency expertise in these matters. *See, e.g., Dickinson v. Zurko*, 527 U.S. 150, 164-65 (1999) (holding that the Federal Circuit must grant additional deference to USPTO fact-finding). This concern, however, is easily addressed by the Court in this case, and provides no sound reason to abandon the doctrine.

In addition, the Solicitor General's concern that in rapidly-developing fields those who seek patent protection early will be rewarded with patents reflects either a fundamental misunderstanding concerning the patent system—which does indeed reward those who innovate early in a technology's development—or a misapprehension as to the legal rules of the nonobviousness requirement. If the application of existing knowledge to a new field is indeed embraced by the contemporaneous knowledge of those of skill in the art, then current doctrine would plainly disallow patentability.[11] If the argument is instead that the Patent and

---

We also note that a recent analysis of the Court of Appeals jurisprudence in this area at least suggests that the Solicitor General's concerns of a differential effect at the USPTO are unfounded; the agency appears to fare little differently than the district courts on appeals relating to obviousness analyses. *See* Petherbridge & Wagner, *supra*, at 36, 39-40 (reporting that the USPTO's affirmance rate—which averaged 64.1% in these cases—climbed throughout the duration of the study, even as the application of TSM increased).

[11] *See, e.g., Kahn*, 441 F.3d at 988; *Cross Med. Prods., Inc. v. Medtronic Sofamor Danek, Inc.*, 424 F.3d 1293, 1323 (Fed. Cir. 2005) ("One of ordinary skill in the art need not see the identical problem addressed in a prior art reference to be motivated to apply its teachings."); *Princeton Biochemicals, Inc. v. Beckman Coulter, Inc.*, 411 F.3d 1332, 1337 (Fed. Cir. 2005) ("[Would] an artisan of ordinary skill in the art at the time of the invention, confronted by the same problems as the inventor and with no knowledge of the claimed invention, [ ] have selected the various elements from the prior art and combined them in the manner claimed."); *Ecolochem, Inc. v. S. Cal. Edison Co.*, 227 F.3d 1361, 1372 (Fed. Cir. 2000); *In re Beattie*, 974 F.2d 1309, 1312 (Fed. Cir.

Trademark Office has in the past been slow to marshal evidence against patentability in developing fields, then this may be correct, but we submit that this logistical problem is not unique to the TSM inquiry, but instead implicates all analyses under §§ 102 and 103—each of which requires the USPTO to apply information produced externally, by third parties, to evaluate patentability. Clearly, the beneficial operation of the patent system depends upon the application of the best information relevant to patentability at the right time; but this administrative concern is best attacked directly, rather than by changing the factual inquiry required by § 103.[12]

B. Most Court of Appeals Cases Cited in Opposition to the TSM Analysis are Misread

Among the benefits the TSM analysis provides to the nonobviousness framework is that it allows reviewability of such decisions on appeal to the Federal Circuit, a concern that this Court has noted as having important implications for the stability and predictability of the patent system. *See Markman, v. Westview Instruments.*, 517 U.S. 370, 390-91 (1996). This role for the TSM analysis is of particular import, of course, in the context of the Federal Circuit's role in evaluating the decision-making of the USPTO, where important rights of prospective patentees can be extinguished by agency mistake. As such, we believe that several of the Court of Appeals decisions discussed by petitioner and supporting amici are misunderstood as requiring an explicit reference to a teaching, suggestion, or motivation to combine—when a better reading suggests that these cases

---

1992) ("[T]he law does not require that the references be combined for the reasons contemplated by the inventor.").

[12] Again, the Federal Circuit may have been too reluctant to defer to technological expertise of the USPTO. This problem, however, goes to the implementation of obviousness analysis, not its content. And it is also easily corrected by this Court.

reflect the Court of Appeals in its administrative oversight role. For example, in *In re Dembiczak*, 175 F.3d 994 (Fed. Cir. 1999), the court set aside the Board of Patent Appeals and Interferences' rejection for failure to identify *any* source of a teaching, suggestion, or motivation to combine. Indeed, the court in *Dembiczak* noted that its holding was evidentiary, not legal: "Because we do not discern any finding by the Board that there was a suggestion to combine prior art references cited against the pending claims, the Board's conclusion of obviousness, as a matter of law, cannot stand." 175 F.3d at 1000. Likewise in *In re Lee*, 277 F.3d 1338 (Fed. Cir. 2002), the Federal Circuit based its holding on the failure of the USPTO to provide a meaningful record upon from which appeal can be taken. In this regard, the holding in *Lee* is straightforward: an unsupported assertion of "common sense," without more, is insufficient under the Patent Act to extinguish an inventor's right to a patent. *See id.* at 1344 (citing *Baltimore & Ohio R.R. Co. v. Aberdeen & Rockfish R.R. Co.*, 393 U.S. 87 (1968)). And yet as in *Dembizcak*, the Court of Appeals noted in *Lee* that such knowledge, if appropriately linked to the understandings of one of ordinary skill in the art, would likely have been sufficient. *See* 277 F.3d. at 1345. *See also In re Kahn*, 441 F.3d 977, 989 (Fed. Cir. 2006).

We think it is thus no coincidence that many of the cases cited by the petitioner and supporting amici as supporting a too-narrow or too-rigid understanding of the TSM analysis have a similar procedural posture.[13] Systematic evaluations of the Court of Appeals' caselaw shows, however, that when the USPTO or alleged infringer provides evidence of

---

[13] *See, e.g., In re Kotzab*, 217 F.3d 1365 (Fed. Cir. 2000); *In re Rouffet*, 149 F.3d 1350 (Fed. Cir. 1998).

obviousness, the Federal Circuit considers it.[14] It may well be that the Court of Appeals has not been as clear as it could be in explaining its reasoning in these cases. Properly understood, however, these cases do not stand for a TSM analysis that is as narrow and rigid as that attributed to them by the petitioner and supporting amici.

C. *If the Court of Appeals has Implemented the Analysis Incorrectly, then this Court Should Clarify the Doctrine Rather than Abandon It*

Although, as we've argued above, there is nothing in the premise of the TSM analysis that supports an overly narrow, excessively rigid understanding of the Court of Appeals' doctrine, we recognize that the language used in some opinions from that court might lead some to find the test either unduly rigid or inconsistent. Likewise, in our view, the Federal Circuit has perhaps been too reluctant to credit the technological expertise of the USPTO in evaluating the *Graham* factors. These concerns, however, fall far short of a rationale for jettisoning the basic TSM approach—and with it three decades of stable doctrinal development. (As well as the doctrine's comparative advantages, discussed in Section III below.) Instead, this case provides this Court a ready opportunity to address these concerns. Specifically, we suggest that this Court clarify that there are no exclusions—other than the limits inherent in the factual components of the section 103 analysis—for the source of a teaching, suggestion or motivation to combine. Second, we suggest that this Court reiterate the holding of *Dickinson v. Zurko*,

---

[14] *See* Christopher A. Cotropia, *Patent Law Viewed Through an Evidentiary Lens: The "Suggestion Test" as a Rule of Evidence*, 2006 BYU L. Rev. ___ (forthcoming 2006), available at http://ssrn.com/abstract=893965, at 32-42 (examining three years of Federal Circuit obviousness jurisprudence and concluding that in all cases the court considers all evidence of obviousness as long as it meets evidentiary standards).

emphasizing the USPTO's statutorily-defined technological expertise and the resultant deferential review of its fact-finding on appeal. 527 U.S. 150, 164-65. These changes would address all of the meritorious concerns of the petitioner and supporting amici, without causing radical changes in the settled expectations of millions of patentees, prospective and otherwise. See *Festo Corp. v. Shoketsu Kinzoku Kogyo Kabushiki Co.*, 535 U.S. 722, 739 (2002) ("[C]ourts must be cautious before adopting changes that disrupt the settled expectations of the inventing community.")

II. THE COURT OF APPEALS' JURISPRUDENCE IS CONSISTENT WITH THE PATENT ACT AND THE COURT'S INTERPRETATION THEREOF

Petitioner and supporting amici claim that the Court of Appeals and its predecessor court's obviousness jurisprudence stands in conflict with the Court's precedent. This is incorrect. Both the Patent Act and the Court's precedents establish that the analytic focus of section 103 is the technological circumstances surrounding an invention, rather than any particular judicially-determined effect (such as 'synergism') of the invention. Contrary to Petitioner's argument, nothing in the Federal Circuit's more recent caselaw suggests the deprecation of the Graham approach, nor any conflict between the TSM analysis and the Court's interpretation of the Patent Act.

A. The Patent Act Clearly Establishes the Person Having Ordinary Skill in the Art as the Measure of Innovation

The legal prohibition against the patentability of obvious inventions has its origins nearly 150 years ago in *Hotchkiss v. Greenwood*, 52 U.S. (11 How.) 248 (1850). In the century that followed, the courts established at least two categories of articulations and tests for the requirement. One, exemplified

by this Courts decision in *Great Atlantic Tea & Pacific Tea Co. v. Supermarket Equipment Corp.*, 340 U.S. 147, 152 (1950) ("A&P"), required that patentable inventions show a judicially-determined quantum of innovation, often described as a 'synergistic effect.' The other, established by *Hotchkiss* itself, but most prominently advocated by Judge Hand, focused on the technological state of the inventive field—how persons of skill in the art would regard the invention.

In direct response to this confusion in the caselaw, Congress made a choice in drafting the 1952 Patent Act to codify one, but not both of these approaches. This choice–to adopt the technologically-focused *Hotchkiss* approach over the judicially-focused invention and synergism approach of *A & P*–was expressly recognized by the Court in *Graham*. Indeed, the Court noted that "[t]he first sentence of [§ 103] is strongly reminiscent of the language in *Hotchkiss*."[15]

In *Adams*,[16] a companion case to *Graham*, the Court proceeded to show exactly how the § 103 approach differed in application from the synergism approach.

> It begs the question, and overlooks the holding of the Commissioner and the Court of Claims, to state merely that magnesium and cuprous chloride were individually known battery components. If such a combination is novel, *the issue is whether bringing them*

---

[15] 383 U.S. at 14. The choice also had been recognized by numerous circuits. *See, e.g., Lyon v. Bausch & Lomb Optical Co.*, 224 F.2d 530 (2d Cir. 1955) (Hand, J.); *R.M. Palmer Co. v. Luden's, Inc.*, 236 F.2d 496, 499-500 (3d Cir. 1956); *Brown v. Brock*, 240 F.2d 723, 727 (4th Cir. 1957); *Reiner v. I. Leon Co*, 285 F.2d 501, 501 (2d Cir. 1960) (Hand, J.); *Mott Corp. v. Sunflower Indus., Inc.*, 314 F.2d 872, 879 (10th Cir. 1963).

[16] *United States v. Adams*, 383 U.S. 39 (1966).

> *together* as taught by Adams was obvious in the light of the prior art.[17]

Thus, as *Graham* and *Adams* make clear, the analysis under section 103 is not whether a combination of existing technologies results in a synergistic (or "inventive," or any other phrasing) effect.[18] Instead, the focus is squarely on the intellectual context of the invention: whether, given the technological circumstances at the time (i.e., the *Graham* factors), the combination would have been obvious to one of skill in the art. As we argued in Section I above, the "teaching, suggestion, or motivation to combine" ("TSM") analysis is not only consistent with this framework, but fully

---

[17] *Adams*, 383 U.S. at 50 (emphasis added).

[18] Congress was straightforward in its desire to curtail the 'synergistic effect' line of cases. The official commentary to the new Act, written by P.J. Federico, then an Examiner-in-Chief at the U.S. Patent Office and one of the drafters of § 103, provided:

> While it is not believed that Congress intended any radical change in the level of invention or patentable novelty, nevertheless, it is believed that some modification was intended in the direction of moderating the extreme degrees of strictness exhibited by a number of judicial opinions over the past dozen or more years; that is, that some change of attitude more favorable to patents was hoped for.

35 U.S.C.A. 1, 22-23 (1954).

Jettisoning "synergism" makes great sense. According to the view in *A & P*, synergism required every patent to be held invalid where "two plus two have been added together, and still they make only four." 340 U.S. 152. But such a test makes no sense because "[t]he laws of physics and chemistry in accordance with which all inventions perform do not permit of the judicially imagined magic according to which 2+2=5." Giles S. Rich, *Laying the Ghost of the "Invention" Requirement*, 1 Am. Pat. L. Ass'n Q. J. 26, 44 (1972). Learned Hand explained further: "[s]ubstantially all inventions are the combination of old elements; what counts is the selection, out of all their possible permutations, of that new combination which will be serviceable." *Safety Car Heating & Lighting Co. v. General Elec. Co.*, 155 F.2d 937, 939 (2d Cir. 1946) (Hand, J.).

embraces the Patent Act's focus on technological circumstances rather than arbitrary, judicially-determined turns of phrase.

B. The Court Has Not Varied Its Approach to Section 103.

Apparently suggesting that the Court has abandoned *Graham* and *Adams*' clear-eyed focus on the person of skill in the art as the yardstick of inventiveness, Petitioners and their supporting amici make much of portions of the Court's more recent decisions in *Black Rock*[19] and *Sakraida*,[20] each of which mentions "synergism" when engaging in an analysis under § 103. But a mere recitation of the word does not, and cannot, signal a revival of the approach that was rejected by Congress and the Court. To the extent that Petitioners suggest that Anderson's *Black-Rock* and *Sakraida* establish an analysis that precludes the TSM approach, they are misreading those precedents to be inconsistent with *Graham*, *Adams*, and the Patent Act. The use of 'synergism' in the Court's most recent opinions is best understood as dicta rather than as a sea-change in the nonobviousness requirement. And as the Court has long recognized, dicta does not bind the Court, especially where it would frustrate express action by Congress.[21]

---

[19] *Anderson's-Black Rock, Inc., v. Pavement Salvage Co.*, 396 U.S. 57 (1969).

[20] *Sakraida v. Ag Pro, Inc.*, 425 U.S. 273 (1976).

[21] *Printz v. U.S.*, 521 U.S. 898, 963-4 (1977) (Stevens, J., joined by Souter, Ginsburg, and Breyer, JJ., dissenting) ("It is, of course, beyond dispute that we are not bound by the dicta of our prior opinions."). *See, also U.S. Bancorp Mortgage Co. v. Bonner Mall Partnership*, 513 U.S. 18, 24 (1994) (Scalia, J.) ("invoking our customary refusal to be bound by dicta"); *Central Va. Community College v. Katz*, 126 S.Ct. 990, 996, (2006) (Stevens, J.) ("[W]e are not bound to follow our dicta in a prior case in which the point now at issue was not fully debated."); *S.E.C. v.*

As the Patent Office Commissioner at the time, C. Marshall Dann, expressly stated in an official directive to the examining corps, both the *Black Rock* and *Sakraida* cases were decided on non-synergistic grounds:

> the Court [in *Sakraida*] and *Black Rock* went on to discuss whether the claimed combinations produced a 'new or different function' and a 'synergistic result," but pointed out that 'both of the decisions had "clearly decided whether the claimed inventions were unobvious on the basis of the three-way test in Graham.... Nowhere in its decisions in those cases does the Court state that the 'new or different function' and 'synergistic result' tests supersede a finding of unobviousness or obviousness under the *Graham* test.[22]

Simply put, the holding of those cases rest squarely on *Graham* foundations.

Both the courts and the Patent Office have recognized that Anderson's *Black Rock* and *Sakraida* do not alter the basic Graham framework. For example, the Seventh Circuit rejected a return to synergism with a similar explanation.[23]

> Neither *Sakraida* nor *Black Rock* can be cited as prescribing some other, special test for the evaluation of combination claims. Nowhere in these two decisions did the Court hold a

---

Edwards, 540 U.S. 389, 396 (2004) (O'Connor, J.) ("[W]e will not bind ourselves unnecessarily to passing dictum that would frustrate Congress' intent . . . .").

[22] C. Marshall Dann, *Examination of Claims for Patentability Under 35 U.S.C. 103*, 949 U.S. Pat. & Trademark Off. Gazette 3 (1976).

[23] *Republic Indus., Inc., v. Schlage Lock Co.*, 592 F.2d 963 (7th Cir. 1979).

> synergistic effect to be a necessary condition of patentability; nor did it hold that to synergism supersedes a finding of non-obviousness under the *Graham* analysis. To the contrary, each case quoted *Graham* with approval. Each turned on whether the claimed invention was non-obvious on the basis of the three-pronged test in Graham.[24]

The Second and Third Circuits also followed suit.[25] So, too, did the Patent Office. A 1976 directive Commissioner Dann eschewed the synergism language from *Black Rock* and *Sakraida* in favor of the objective test of § 103, *Hotchkiss*, and *Graham*.[26] The Patent Office even went so far as to promulgate changes to its official examination procedures, the Manual of Patent Examining Procedure, to formally require adherence to the objective standard of § 103, *Hotchkiss*, and *Graham,* including "Commercial Success and Other Considerations Bearing on Obviousness."[27] Patent examiners were specifically ordered that "[t]he Graham v. John Deere pronouncements on the relevance of commercial success, etc. to a determination of obviousness were not negated" by *Sakraida* or *Black Rock*.[28] Examiners were further ordered to state specifically the reasons why evidence put forth by an applicant was not sufficient to overcome a rejection for obviousness.[29] Indeed, the strong efforts by

---

[24] *Id.* at 969.

[25] *See, e.g., Rengo Co. v. Molins Mach. Co.*, 657 F.2d 535 (3rd Cir. 1981); *Champion Spark Plug Co. v. Gyromat Corp.*, 603 F.2d 361 (2nd Cir. 1979).

[26] Dann, *supra.*

[27] Rene D. Tegtmeyer, *Commercial Success and Other Considerations Bearing on Obviousness*, 973 Official Gazette 34 (1978).

[28] *Id.*

[29] *Id.*

Commissioner Dann to avoid the trap laid by the synergism dicta in *Black Rock* and *Sakraida* provide an important explanation for why the only other recent § 103 decision by the Court, *Dann v. Johnston*, 425 U.S. 219 (1976), fails to even mention the word synergism or its variants.

Thus, as recognized by several courts of appeals and the Patent Office, the law today requires *Graham*'s technologically-focused analysis under section 103.

C. The TSM Test is Fully Consistent with the Court's Precedents

The Court of Appeals' framework for analyzing § 103 is fully consistent with the Court's precedents precisely because it is focused on the actual technology at the time the subject matter in the patent was developed. While concerns about bad patents are legitimate, changing the standard of § 103 is not the right response. As the Court itself took pains to elaborate forty years ago in *Graham*, the ever-advancing state of the art fixes many of these problems:

> Technology, however, has advanced—and with remarkable rapidity in the last 50 years. Moreover, the ambit of applicable art in given fields of science has widened by disciplines unheard of a half century ago. It is but an evenhanded application to require that those persons granted the benefit of a patent monopoly be charged with an awareness of these changed conditions. The same is true of the less technical, but still useful arts. He who seeks to build a better mousetrap today has a long path to tread before reaching the Patent Office.[30]

---

[30] *Graham*, 383 U.S. at 19.

To implement the Court's focus on the state of the art at the time of invention, the Court of Appeals has required the decision-maker to look closely at that state of the art. As set forth more fully in Section I, above, the Court of Appeal's TSM test is the tie that binds the legal test to the state of the art, and ensures that section 103 of the Patent Act accomplishes its Congressional, and Constitutional, objectives.

III. THE "TEACHING, SUGGESTION, OR MOTIVATION TO COMBINE" ANALYSIS IS THE ONLY FRAMEWORK IDENTIFIED THAT IS CONSISTENT WITH THIS COURT'S PRECEDENT AND THE PATENT ACT

Section 103 of the Patent Act establishes a demanding technological inquiry: a careful evaluation of the intellectual context of an invention at the time of its creation. Because this non-obvious determination requires evaluation of circumstances in the past (often many years past), there is a natural, well-understood "hindsight" bias that prejudices decision-makers to think an invention, once made, must have been easier than in fact it was. Hindsight, as the saying goes, is 20/20. This Court has correctly recognized that proper nonobviousness decisions require attention to the hindsight bias. The analysis of whether a "teaching, suggestion, or motivation to combine" prior art references, through its structure and evidentiary focus, directly combats the hindsight bias.

In addition, the Court has identified the desire of improving uniformity and definiteness in the nonobviousness determination. TSM's technological focus and workable framework also adds certainty into the nonobviousness inquiry. In contrast, the alternative tests offered by petitioner and some amici would enhance, not ameliorate the hindsight bias, and would introduce unnecessary complexity and vagueness into the nonobviousness analysis. Properly

understood, the Court of Appeals' TSM approach, while by no means removing all hindsight bias or creating absolute certainty, is the best of the currently available options.

A. TSM's Framework Combats Hindsight Bias While Alternatives Cater to It

The Court emphasized in *Graham* that a proper analysis of obviousness should avoid hindsight bias. 383 U.S. at 36 (noting the need to "guard against slipping into use of hindsight" when determining nonobviousness) (quoting *Monroe Auto Equip. Co. v. Heckethorn Mfg. & Supply Co.*, 332 F.2d 406, 412 (6th Cir. 1964)). And yet, the Court also recognized that the nonobviousness framework established in *Graham* did not alone solve the hindsight problem. *Id.* This insight was confirmed in a recent study of nonobviousness decision-making.[31] Among the proposed alternatives in this case, TSM best satisfies the Court's mandate to combat the hindsight bias in nonobviousness decision-making.

1. Section 103 states that a patent cannot issue when the claimed subject matter "would have been obvious at the time the invention was made." 35 U.S.C. § 103(a). The Patent Act thus requires that the decision be based on whether the invention was non-obvious in the *ex ante* world immediately prior to the invention's creation. A proper non-obvious decision must not take into account the *ex post* fact that the invention actually was achieved. But ignoring the fact of invention is easier said than done. Humans are cognitively incapable of preventing knowledge gained through hindsight (here, that the invention was achieved) from impacting their analysis of past events, as required for the proper *ex ante*

---

[31] Gregory Mandel, *Patently Non-Obvious II: Experimental Study on the Hindsight Issue before the Supreme Court*, 9 Yale J. of L. & Tech. ___ (forthcoming 2006), available at http://ssrn.com/abstract_id=928662, at 15.

analysis.[32] Because of this hindsight bias, individuals routinely overestimate the *ex ante* predictability of events after they have occurred.[33] Critically for patent law, once individuals have hindsight information, they exaggerate what could have been anticipated in foresight and not only tend to view what has occurred as having been inevitable, but also as having appeared "relatively inevitable" beforehand.[34] As the Court has succinctly stated, "[n]ow that [the invention] has succeeded, it may seem very plain to any one that he could have done it as well." *Loom Co. v. Higgins*, 105 U.S. 580, 591 (1882).

Hindsight bias, if left unchecked, causes erroneous findings of obviousness. A recent study, based on actually-litigated patents, looked at the effects of hindsight bias on mock jurors and found a significant hindsight effect in nonobviousness determinations.[35] The study found the magnitude of the hindsight bias in patent decisions to be greater than that in other legal judgments.[36] If not ameliorated, the validity of the whole nonobviousness

---

[32] Baruch Fischoff, *For Those Condemned to Study the Past: Heuristics and Biases* in *Hindsight, in Judgment Under Uncertainty: Heuristics and Biases* 335 (Kahneman et al. eds., 1982).

[33] *Id.* at 341.

[34] *Id.*; *see also Graham v. Conner*, 490 U.S. 386, 396-97 (1989) (cautioning against the "20/20 vision of hindsight" when determining whether an officer used reasonable force); *Strickland v. Washington*, 466 U.S. 668, 689 (1984) (discussing the "distorting effects hindsight" when determining ineffective assistance of counsel).

[35] *See* Gregory Mandel, *Patently Non-Obvious: Empirical Demonstration that the Hindsight Bias Renders Patent Decisions Irrational*, 67 Ohio St. L.J. ___ (forthcoming 2006), available at http://ssrn.com/abstract=871684, at 14-16.

[36] *See id.* at 16 (reporting that an average of 39% of mock jurors shifted their decisions concerning nonobviousness when presented with the invention's existence).

inquiry—and thus the ultimate effectiveness of the patent system—is compromised by the hindsight bias.

While providing patent protection for obvious inventions is harmful to technological innovation, so too is the denial of protection for non-obvious inventions. Patent protection is needed to encourage the production of inventions, encourage their disclosure to the public, and foster their commercialization and exploitation for the greater public good. *See Bonito Boats, Inc. v. Thunder Craft Boats, Inc.*, 489 U.S. 141, 146-47, 151-52 (1989). The hindsight bias can affect this incentive structure by raising the requirement for patent protection too high and denying exclusivity for those very inventions the patent system wishes to foster. Left unaddressed, the hindsight bias could prevent the patent law from fulfilling its constitutional mandate—to "promote the Progress of . . . useful Arts." U.S. Const. Art. I, § 8, cl. 8. *See also Graham*, 383 U.S. at 36.

2. The TSM analysis is constructed squarely to meet this goal. This approach requires a fact-finder to evaluate the technological context of the invention, through the eyes of the 'person having ordinary skill in the art.' For it is only with this careful focus on the contemporaneous information available to the inventor that a decision-maker can determine whether the invention was actually obvious in light of the state of the art at the time the invention was achieved, not that the invention merely appears obvious in hindsight.[37] TSM forces the decision-maker to ground in actual evidence an initial conclusion that may have been prejudiced by the hindsight bias.[38] If there is no such information indicating that the invention would have been created in the absence of

---

[37] *See In re Kahn*, 441 F.3d 977, 986 (Fed. Cir. 2006).

[38] *See Alza Corp. v. Mylan Labs., Inc.*, No. 06-1019 (Fed. Cir. Sept. 6, 2006) (noting that TSM requires more than "mere speculation or conjecture" to prove obviousness).

non-obvious insight, then no TSM is found and the invention is properly held non-obvious. TSM thus provides an objective check against even the unconscious application of hindsight.[39]

3. In sharp contrast to TSM, the alternative tests presented by Petitioners and supporting amici invite hindsight and would thus increase the possibility of erroneous obvious determinations.

The first proposed alternative is to look "to whether a person having ordinary skill in the art would have been *capable* of adapting extant technology to achieve a desired result." Brief of Petitioner, at 16 (emphasis in original).[40] A test that looks only at capability suffers tremendous hindsight problems. Indeed, this analysis mandates that the decision-maker use the completed invention as an intellectual roadmap, simply asking whether it could have been made. This is, of course, the essence of hindsight—an assumption that a person of ordinary skill at the time of invention would have known what to target: the completed invention.

---

[39] Another recent study by Professor Gregory Mandel found the hindsight bias is so strong that even TSM may be unable to fully mitigate its effects in all cases. *See* Gregory Mandel, *Patently Non-Obvious II: Experimental Study on the Hindsight Issue before the Supreme Court*, *supra*, at 15. TSM may do more to reduce the effects of hindsight bias in complex technology cases. *Id.* at 32. Recent theoretical and empirical work supports this claim. *See* Christopher A. Cotropia, *Patent Law Viewed Through an Evidentiary Lens: The "Suggestion Test" as a Rule of Evidence*, 2006 BYU L. REV. ___ (forthcoming 2006), available at http://ssrn.com/abstract=893965, at 64; Sean M. McEldowney, *New Insights on the "Death" of Obviousness: An Empirical Study of District Court Obviousness Opinions*, 2006 Stan. Tech. L. Rev. 4, ¶ 41. But even if the TSM test is not perfect, it is better than the alternatives proposed in this case.

[40] The United States supports a similar approach. Br. of U.S., at 17.

Another proposed alternative supports "[a] robust inquiry into the level of ordinary skill in the art."[41] We agree that such an inquiry is appropriate. But it is properly the beginning of the inquiry, not the end. Ending the inquiry with the level of skill in the art invites hindsight for the same reasons as the "capable of" test: it focuses only on what the person of ordinary skill *can* do, not what that person was reasonably likely to do. Again, if there is no required factual finding as to whether this person would have been motivated to create the invention, the hindsight bias (via the knowledge that the invention was actually made) will ensure that many significant inventions will be erroneously found obvious.

A third proposed alternative is to create a presumption based solely on a combination of prior art that a TSM is met, placing the burden of establishing that there is no TSM on the patentee. Although appearing to retain the analysis, this recommendation would seriously limit TSM's hindsight-combating capability, by relegating the analysis to a secondary role, validating hindsight analysis, and forcing the patentee (in contravention of the Patent Act, *see* 35 U.S.C. § 282) to refute an irrational, counter-factual conclusion. Further, this approach will likely skew the obviousness analysis in favor of those with significant resources to the detriment of smaller companies and individual inventors: where an exhaustive (and expensive) prior art search is enough to create a presumption of obviousness, regardless of the understanding of a person of ordinary skill in the art, then the well-resourced will have a clear path to the invalidation of competitors', especially smaller competitors', patents.

---

[41] This is the proposal offered by the Intellectual Property Law Professors. *See* Br. of Intell. Prop. L. Prof., at 25-27.

B. In Contrast to the Proposed Alternatives, TSM Provides Some Structure and Certainty to a Difficult Inquiry

This Court has emphasized Congress's goal of creating a uniform and definite test for patentability. *See Dann v. Johnston*, 425 U.S. 219, 225-26 (1976) ("[I]t was only in 1952 that Congress, in the interest of 'uniformity and definiteness,' articulated the requirement in a statute." (quoting S.Rep. No. 82-1979, at 6 (1952); H.R. Rep. No. 82-1923, at 7 (1952))). TSM better addresses these goals than the alternatives offered by Petitioners and some amici.

1. The nonobviousness inquiry is inherently a challenging one. The absolute standard is difficult to articulate, as Thomas Jefferson recognized over two centuries ago. *See Graham*, 383 U.S. at 11 ("Jefferson saw clearly the difficulty in 'drawing a line between the things which are worth to the public the embarrassment of an exclusive patent and those which are not.'"). The analysis is also highly factual, focusing on technical questions that like minds could differ on as to their "correct" answer. *See id.* at 18 (noting that "[w]hat is obvious is not a question upon which there is likely to be uniformity of thought in every given factual context").

Congress and this Court have recognized this challenge and have sought to inject some certainty and definiteness into nonobviousness. Section 103 was adopted to have a "stabilizing effect and minimize great departures" in this area of law. S. Rep. No. 82-1979, at 6 (1952); H. Rep. No. 82-1923, at 7 (1952). This Court in *Graham* sought to create a "more practical test of patentability" that would "result in that uniformity and definiteness which Congress called for in the 1952 Act." *Graham*, 383 U.S. at 18. Having a well-defined and reproducible test is beneficial for a variety of reasons. It ensures that, whatever specific standard is adopted for nonobviousness, there is a higher likelihood that

the standard will be correctly and consistently used by courts and the Patent Office. Decisions by district courts and the Patent Office, in turn, will be less likely to be disturbed by the Federal Circuit. In addition, parties outside the litigation and patent application context would be able to correctly apply the nonobviousness inquiry to evaluate potential licensing arrangements, values of companies based on patent holdings or exposure, and litigation threats. Certainty and predictability of what is and is not patentable protects "the delicate balance the law attempts to maintain between inventors, who rely on the promise of the law to bring the invention forth, and the public, which should be encouraged to pursue innovations, creations, and new ideas beyond the inventor's exclusive rights." *Festo Corp. v. Shoketsu Kinzoku Kogyo Kabushiki Co.*, 535 U.S. 722, 731 (2002) (citing *Bonito Boats*, 489 U.S. at 150). Being able to correctly determine what is and is not protected "is essential to promote progress, because, it enables efficient investment in innovation." *Festo*, 535 U.S. at 730-31.

2. The structure of TSM, while by no means creating absolute certainty, introduces at least some predictability into the nonobviousness inquiry. The very structure that reduces hindsight bias also gives the inquiry definiteness.[42] TSM articulates a more identifiable target for the decision-maker—a teaching, suggestion, or motivation at the time of the invention. The decision-maker is not merely told to determine, faced with what is in the prior art and an understanding of the skill in the art, whether the invention is obvious. Instead, TSM provides the decision-maker a more detailed definition of what is "obvious" in light of the identified *Graham* factors. TSM also makes the inquiry

---

[42] *See* F. Scott Kieff, *The Case for Registering Patents and the Law and Economics of Present Patent-Obtaining Rules*, 45 B.C. L. Rev. 55, 89-93 (2003) (describing TSM as an "objective and practical framework").

more definite as compared to alternatives by establishing more understandable categories under which a decision-maker can find a teaching, suggestion, or motivation: the explicit and implicit teachings of the art, the knowledge of a person having ordinary skill, and the nature of the problem,. As a result, the reasoning in administrative decisions and judicial opinions using TSM are easier to understand and review than those made under more amorphous standards. *See Graham*, 383 U.S. at 18-19 (noting that one goal of § 103 is to "bring about a closer concurrence between administrative and judicial precedent").

Recent empirical studies confirm that TSM helps provide some predictability to an inherently complex doctrine. A study looking at fifteen years of Federal Circuit nonobviousness jurisprudence, from 1990-2005, found a "remarkably stable" rate of reversal or vacation of district court opinions.[43] The study also found that the rate of reversal of the Patent Office has declined, indicating even greater uniformity between the Federal Circuit and the Patent Office.[44] Another study, looking at four years of Federal Circuit nonobviousness jurisprudence, from 2002-2005, found that TSM resulted in vacating of summary judgment on issue of nonobviousness only 17.07-percent of the time.[45]

---

[43] *See* Lee Petherbridge and R. Polk Wagner, *The Federal Circuit and Patentability: An Empirical Assessment of the Law of Obviousness.* 85 Tex. L. Rev. __ (forthcoming 2007) (Aug. 18, 2006), available at http://ssrn.com/abstract=923306, at 34, 45.

[44] *Id.* at 39-41, 45.

[45] *See* Christopher A. Cotropia, *Nonobviousness and the Federal Circuit: An Empirical Analysis of Recent Case Law*, 82 Notre Dame L. Rev. __ (forthcoming 2007), available at http://ssrn.com/abstract=933192, at 39.

These studies give a more complete picture of the stability created by TSM then the specific case before the court. Admittedly, TSM is far from perfectly certain and predictable. However, TSM is clearly

3. The alternative tests mentioned above do the opposite, introducing more uncertainty into the nonobviousness analysis. As a result, they fail to minimize errors in the nonobviousness analysis.

The proposed alternatives that focus solely on "[a] robust inquiry into the level of ordinary skill in the art"[46] create uncertainty because they fail to instruct the decision-maker as to what they should do with this information. Once the level of skill is ascertained, no matter how robustly constructed, there must still be a determination as to whether the invention would have been obvious to this person at the time the invention was made. *See* 35 U.S.C. § 103. Unlike the TSM analysis, this proposed alternative provides no guidance on how to make this determination, and thus increases the likelihood of errors and divergent outcomes.

An additional proposed alternative looks at whether the invention "could have been made within a reasonable period of time and within reasonable budgetary constraints."[47] Not only does this proposal fail to even address the hindsight problem, but the test is also entirely indefinite and could not be applied with consistency. The institution of a "reasonable" standard for such difficult questions would provide no direction to district courts, the Patent Office, or private parties. The test also requires a complex policy determination that most actors would be incapable of making on a case-by-case basis due to lack of information or expertise. One of the real advantages of TSM is that private parties at least have some chance to predict outcomes on issues of nonobviousness—because it focuses the inquiry on

---

structured to generate some certainty in this area, and the empirical data supports this claim.

[46] *See* Br. of Intell. Prop. L. Prof., at 25-27.

[47] This is the test offered by the Economists and Legal Historians. *See* Br. of Economists & Legal Historians, at 17.

actual facts extrinsic to the judicial process rather than ad hoc subjective determinations by non-technical judges.[48]

CONCLUSION

For the reasons set forth above, we suggest that the Court clarify, but retain, the well-established "teaching, suggestion, or motivation to combine" analysis for obviousness under section 103 of the Patent Act.

Respectfully submitted,

F. SCOTT KIEFF
School of Law
Washington University
in St. Louis
Campus Box 1120
One Brookings Drive
St. Louis, MO 63130
(314) 935-5052

MARK A. LEMLEY
Stanford Law School
Crown Quadrangle
559 Nathan Abbott Way
Stanford, CA 94305
(650) 723-4605

CHRISTOPHER A. COTROPIA
Counsel of Record
University of Richmond
School of Law
28 Westhampton Way
Richmond, VA 23173
(804) 484-1573

GREGORY N. MANDEL
Albany Law School
80 New Scotland Avenue
Albany, NY 12208
(518) 445-3303

R. POLK WAGNER
University of Pennsylvania
Law School
3400 Chestnut Street
Philadelphia, PA 19104
(215) 898-4356

October 16, 2006

Counsel for Amici Curiae

---

[48] *See* F. Scott Kieff, *How Ordinary Judges and Juries Decide the Seemingly Complex Technological Questions of Patentability over the Prior Art, in Perspectives on Properties of the Human Genome Project* 481-82 (Kieff ed., Academic Press 2003).

APPENDIX

APPENDIX – LIST OF AMICI*

DAN L. BURK
Oppenheimer, Wolff & Donnelly Professor of Law
University of Minnesota Law School

DANIEL R. CAHOY
Assistant Professor of Business Law
Smeal College of Business
Penn State University

CHRISTOPHER A. COTROPIA
Associate Professor of Law
Intellectual Property Institute
University of Richmond School of Law

RICHARD A. EPSTEIN
James Parker Hall Distinguished Service Professor of Law
University of Chicago
Peter and Kirsten Bedford Senior Fellow
Hoover Institution, Stanford University

JAY P. KESAN
Professor of Law
Director, Program in Intellectual Property & Technology Law
University of Illinois College of Law

---

* Representative organizational affiliations of all signatories are provided for identification purposes only. Some amici have additional of counsel, consulting, or other relationships with law firms, corporations, or other organizations. In no case do the undersigned purport to speak for any organization and the views expressed here should not be attributed to any organization. The views expressed here are the personal views of the amici.

F. SCOTT KIEFF
Associate Professor of Law
School of Law, Washington University in St. Louis
Research Fellow
Hoover Institution, Stanford University

AMY L. LANDERS
Assistant Professor of Law
McGeorge Law School, University of the Pacific

LORELEI RITCHIE DE LARENA
Assistant Professor of Law
The Florida State University School of Law

JEFFERY A. LEFSTIN
Assistant Professor of Law
University of California, Hastings College of Law

MARK A. LEMLEY
William H. Neukom Professor of Law
Stanford Law School

GREGORY N. MANDEL
Associate Dean for Research & Scholarship
Professor of Law
Albany Law School

STEPHEN MCJOHN
Professor of Law
Suffolk University Law School

MICHAEL S. MIRELES
Assistant Professor of Law
Sturm College of Law
University of Denver

KRISTEN R. OSENGA
Assistant Professor of Law
Intellectual Property Institute
University of Richmond School of Law

R. POLK WAGNER
Professor of Law
University of Pennsylvania Law School

555G

Supreme Court, U.S.
FILED
AUG 22 2006
OFFICE OF THE CLERK

No. 04-1350

In the Supreme Court of the United States

KSR INTERNATIONAL CO.,

Petitioner,

v.

TELEFLEX INC., ET AL.,

Respondents.

On Writ of Certiorari to the United States Court of Appeals for the Federal Circuit

BRIEF OF THE BUSINESS SOFTWARE ALLIANCE AS AMICUS CURIAE IN SUPPORT OF PETITIONER

ANDREW J. PINCUS
Counsel of Record
MIRIAM R. NEMETZ
EVAN P. SCHULTZ
KEVIN S. RANLETT
Mayer, Brown, Rowe & Maw LLP
1909 K Street, NW
Washington, DC 20006
(202) 263-3000

Counsel for Amicus Curiae

WILSON-EPES PRINTING CO., INC. – (202) 789-0096 – WASHINGTON, D.C. 20001

QUESTION PRESENTED

Whether an alleged innovation is obvious under 35 U.S.C. § 103—and therefore not patentable—*only* when prior art contains objective documentation of a "suggestion, teaching, or motivation" that would lead a person having ordinary skill in the art to combine the elements in the same manner as the claimed invention.

TABLE OF CONTENTS

Page

QUESTION PRESENTED I

TABLE OF AUTHORITIES iv

INTEREST OF THE AMICUS CURIAE 1

INTRODUCTION AND SUMMARY OF ARGUMENT 2

ARGUMENT 5

I. THE PRACTICAL EFFECTS ON TECHNOLOGY INDUSTRIES OF THE FEDERAL CIRCUIT'S "TEACHING, SUGGESTION, OR MOTIVATION" RULE DEMONSTRATE THE STANDARD'S FLAWS AS A TEST FOR OBVIOUSNESS 5

A. The Federal Circuit's Test Makes It Difficult To Establish Obviousness At The Summary-Judgment Stage, Making Infringement Claims More Expensive To Litigate And Riskier to Defend 6

B. The Availability Of Patents For Obvious Combinations Of Prior Art Imposes Substantial Costs On Technology Companies 10

C. The Often-Incomplete Prior-Art Record For Hardware and Software Magnifies The Negative Effect Of The Federal Circuit's Standard 14

TABLE OF CONTENTS – continued

Page

II. THIS COURT SHOULD REAFFIRM THE BROAD SCOPE OF THE OBVIOUSNESS INQUIRY AND MAKE CLEAR THAT PROOF OF A SPECIFIC "SUGGESTION, TEACHING, OR MOTIVATION" IS NOT ESSENTIAL TO A FINDING OF OBVIOUSNESS 16

A. The Federal Circuit's "Teaching, Suggestion, Or Motivation" Test Improperly Disregards Other Methods Of Demonstrating That A Claimed Invention Is Obvious To A Person Having Ordinary Skill In The Art 17

B. The Federal Circuit Places Inordinate Weight On "Secondary" Circumstantial Evidence Of Obviousness 25

CONCLUSION 29

TABLE OF AUTHORITIES

Page(s)

CASES

AT&T v. Excel Communications, Inc., 172 F.3d 1352 (Fed. Cir. 1999) 15

Adams v. Bellaire Stamping Co., 141 U.S. 539 (1891) 20

Alco Standard Corp. v. Tenn. Valley Auth., 808 F.2d 1490 (Fed. Cir. 1986) 26

Anderson's-Black Rock, Inc. v. Pavement Salvage Co., 396 U.S. 57 (1969) 23, 26

Atl. Works v. Brady, 107 U.S. 192 (1883) 18

Bonito Boats, Inc. v. Thunder Craft Boats, Inc., 489 U.S. 141 (1989) 19

C.R. Bard, Inc. v. M3 Sys., Inc., 157 F.3d 1340 (Fed. Cir. 1998) 25

Dann v. Johnston, 425 U.S. 219 (1976) 20

Dir. Office of Workers' Comp. Programs, Dep't of Labor v. Newport News Shipbuilding & Dry Dock Co., 514 U.S. 122 (1995) 23

eBay Inc. v. MerExchange, L.L.C., 126 S. Ct. 1837 (2006) 11, 16, 17, 24

Eli Lilly & Co. v. Barr Labs., Inc., 251 F.3d 955 (Fed. Cir. 2001) 8

Emerson Elec. Co. v. Spartan Tool, LLC, 223 F. Supp. 2d 856 (N.D. Ohio 2002) 8

Graham v. John Deere Co., 383 U.S. 1 (1966) ..... *passim*

Great Atl. & Pac. Tea Co. v. Supermarket Equip. Corp., 340 U.S. 147 (1950) 20, 26

TABLE OF AUTHORITIES – continued

Page(s)

Hailes v. Van Wormer, 87 U.S. 353 (1873) 20

Hotchkiss v. Greenwood, 52 U.S. (11 How.) 248 (1850) 19, 20

Hybritech Inc. v. Monoclonal Antibodies, Inc., 802 F.2d 1367 (Fed. Cir. 1986) 25

In re Dembiczak, 175 F.3d 994 (Fed. Cir. 1999) 21, 23, 24

In re Huston, 308 F.3d 1267 (Fed. Cir. 2002) 21

In re Kahn, 441 F.3d 977 (Fed. Cir. 2006) 24

In re Lee, 277 F.3d 1338 (Fed. Cir. 2002) 3, 10, 21, 24

In re Piasecki, 745 F.2d 1468 (Fed. Cir. 1984) 26

In re Zurko, 258 F.3d 1379 (Fed. Cir. 2001) 22, 24

Lincoln Eng'g Co. of Ill. v. Stewart-Warner Corp., 303 U.S. 545 (1938) 20

Panduit Corp. v. Dennison Mfg. Co., 810 F.2d 1561 (Fed. Cir. 1987) 26

Pro-Mold & Tool Co. v. Great Lakes Plastics, Inc., 75 F.3d 1568 (Fed. Cir. 1996) 9, 27

Reckendorfer v. Faber, 92 U.S. 347 (1875) 20

Remcor Prods. Co. v. Scotsman Group, Inc., 860 F. Supp. 568 (N.D. Ill. 1994) 9

Rockwell Int'l Corp. v. United States, 147 F.3d 1358 (Fed. Cir. 1998) 8

Sakraida v. Ag Pro, Inc., 425 U.S. 273 (1976) 20, 23, 26

Simmons Fastener Corp. v. Ill. Tool Works, Inc., 739 F.2d 1573 (Fed. Cir. 1984) 26, 27

TABLE OF AUTHORITIES – continued

Page(s)

State Street Bank & Trust Co. v. Signature Fin. Group, Inc., 149 F.3d 1368 (Fed. Cir. 1998) 15

Stratoflex, Inc. v. Aeroquip Corp., 713 F.2d 1530 (Fed. Cir. 1983) 26

Tec Air, Inc. v. Denso Mfg. Mich. Inc., 192 F.3d 1353 (Fed. Cir. 1999) 25

Toledo Pressed Steel Co. v. Standard Parts, Inc., 307 U.S. 350 (1939) 20

Turbocare Div. of Demag Delaval Turbo-Machinery Corp. v. Gen. Elec. Co., 214 F. Supp. 2d 170 (D. Mass. 2002) 8

United States v. Adams, 383 U.S. 39 (1966) 19, 20

CONSTITUTIONAL PROVISIONS AND STATUTES

U.S. CONST. art I, § 8, cl. 8 18

35 U.S.C. § 103 ..... *passim*

35 U.S.C. § 282 8

35 U.S.C. § 283 16

MISCELLANEOUS

Am. Intellectual Prop. Law Ass'n, REPORT OF THE ECONOMIC SURVEY (2003) 7

John H. Barton, *Non-Obviousness*, 43 IDEA 475 (2003) 5, 16

Julie E. Cohen & Mark A. Lemley, *Patent Scope and Innovation in the Software Industry*, 89 CAL. L. REV. 1 (2001) 12, 14, 15

TABLE OF AUTHORITIES – continued

Page(s)

John Duffy, Address to Am. Enter. Inst. For Pub. Policy Research: The Patent System & the New Economy (Mar. 10, 2005), *at* http://tinyurl.com/zw3ez 13

European Patent Convention, 1065 U.N.T.S. 255 (1973) 22

Federal Trade Commission Report, TO PROMOTE INNOVATION: THE PROPER BALANCE OF COMPETITION AND PATENT LAW AND POLICY (Oct. 2003) ..... *passim*

Alan Greenspan, Remarks Before the Economic Club of New York, NY: Technology and the Economy (Jan. 13, 2000), *at* http://tinyurl.com/a23za 1

Richard S. Gruner, *Everything Old is New Again: Obviousness Limitations on Patenting Computer Updates of Old Designs*, 9 B.U. J. SCI. & TECH. L. 209 (2003) 14

Bronwyn H. Hall & Rosemarie Ham Ziedonis, *The Patent Paradox Revisited: An Empirical Study of Patenting in the U.S. Semiconductor Industry, 1979-1995*, 32 RAND J. ECON. 101 (2001) 10, 15

Matt Hines, *Graphics Patent Suit Targets Dell, Others*, CNET News.com, Apr. 23, 2004, *at* http://tinyurl.com/ae73h 12

TABLE OF AUTHORITIES – continued

Page(s)

Internet Patent News Service & Source Translation and Optimization Co., *Patent/Copyright Infringement Lawsuits/Licensing Awards, at* http://www.iplaw-quality.com/economic/awards.htm 7

Adam B. Jaffe & Josh Lerner, INNOVATION AND ITS DISCONTENTS (2004) 11

Peter Judge, *Wi-Fi World Under Threat from Symbol Patent: Wireless Vendor to Seek License Fees from All Wi-Fi Equipment Vendors,* Techworld.com, Sept. 23, 2004, *at* http://tinyurl.com/gjt2s 12

William O. Kerr & Gauri Prakash-Canjels, *Patent Damages and Royalty Awards: The Convergence of Economics and Law, in* LES NOUVELLES (June 2003) 7

Edmund W. Kitch, *Graham v. John Deere Co: New Standards for Patents*, 1966 SUP. CT. REV. 293 27

Glynn S. Lunney, Jr., *E-Obviousness*, 7 MICH. TELECOMM. & TECH. L. REV. 363 (2001) 9

Martin LaMonica, *Small Company Makes Big Claims on XML Patents,* CNET News.com, Oct. 21, 2005, *at* http://tinyurl.com/ae9dpq 11

Nat'l Res. Council, A PATENT SYSTEM FOR THE 21ST CENTURY (2004) 14, 16

Gerald Paterson, THE EUROPEAN PATENT SYSTEM (2nd ed. 2001) 22, 28

TABLE OF AUTHORITIES – continued

Page(s)

Press Release, USPTO, USPTO Releases Annual List of Top 10 Organizations Receiving Most U.S. Patents (Jan. 10, 2006), *at* http://tiny-url.com/c69e2 1

PriceWaterhouseCoopers, 2006 PATENT AND TRADEMARK DAMAGES STUDY 7

Giles S. Rich, *The Principles of Patentability*, 42 J. PAT. OFF. SOC'Y 75 (1960) 18

Carl Shapiro, *Navigating the Patent Thicket: Cross Licenses, Patent Pools, and Standard Setting*, *in* INNOVATION POLICY AND THE ECONOMY 126 (Adam B. Jaffe et al., eds., 2001) 12

Software Patent Institute Database of Software Technologies, *at* www.spi.org/missendo.htm 15

U.S. Dep't of Commerce, Bureau Econ. Analysis, *at* http://tinyurl.com/jyv4c 1

University of Houston Law Ctr. Inst. for Intellectual Prop. & Info. Law, *Patstats*, *at* http://www.patstats.org 9

USPTO, Performance and Accountability Report Fiscal Year 2005, *available at* http://tinyurl.com/qvjmh 12

INTEREST OF THE AMICUS CURIAE[1]

The Business Software Alliance ("BSA") is an association of the world's leading software and hardware technology companies, including Adobe, Apple, Autodesk, Avid, Bentley Systems, Borland, Cadence Design Systems, Cisco Systems, CNC Software/Mastercam, Dell, Entrust, HP, IBM, Intel, Internet Security Systems, Microsoft, PTC, RSA Security, SAP, Solidworks, Sybase, Symantec, Synopsys, The Mathworks, and UGS. BSA's members collectively own more than 30,000 patents, and include three of the four leading U.S. based patent recipients for 2005. See Press Release, USPTO, USPTO Releases Annual List of Top 10 Organizations Receiving Most U.S. Patents, *at* http://tinyurl.com/c69e2 (Jan. 10, 2006). These companies—which represent an industry that is crucially important to the U.S. economy[2]—have an obvious stake in the proper functioning of the U.S. patent system.

BSA's members believe that the Federal Circuit's standard for assessing whether a particular combination of prior-

---

[1] The parties have consented to the filing of this brief; the written consents have been filed with the Court. This brief was not authored in whole or in part by counsel for a party, and no person or entity, other than the *amicus curiae*, its members, and its counsel made a monetary contribution to the preparation and submission of this brief.

[2] In 2005, the information technology industry directly contributed $481 billion to the U.S. GDP. U.S. Dep't of Commerce, Bureau Econ. Analysis, *at* http://tinyurl.com/jyv4c. More important, though, are the industry's indirect contributions to the economy: Former Federal Reserve Bank Chairman Greenspan has observed that "information technology" and "information innovation lie[] at the root of productivity and economic growth" in the economy as a whole. Remarks Before the Economic Club of New York, NY: Technology and the Economy (Jan. 13, 2000), *at* http://tinyurl.com/a23za.

art elements is obvious—and therefore unpatentable—frustrates Congress's goal of ensuring that patents are granted only to deserving advances. Because the Federal Circuit's approach elevates objective documentation over the statutory requirements and common sense, it compels the U.S. Patent and Trademark Office ("PTO") to grant patents for inventions that would be obvious to any skilled practitioner of the art. The standard also makes it much more difficult for the party challenging a patent to demonstrate obviousness in court—and nearly impossible for it to do so at the summary-judgment stage.

The multiplication of undeserved patents resulting from the Federal Circuit's obviousness standard is especially harmful to technology companies because the complexity of technology products provides a fertile field for unjustified patent claims based upon combinations of preexisting inventions. A finding of obviousness under the Federal Circuit standard depends on the existence of objective documentation in the prior art, moreover, and the standard therefore places a particularly heavy finger on the scale in favor of patentability in the technology sector, where the prior art record is often incomplete.

BSA is well situated to demonstrate the flaws in the Federal Circuit's approach to obviousness and to explain the proper standard for courts to apply in making obviousness determinations.

INTRODUCTION AND SUMMARY OF ARGUMENT

Congress withheld patent protection from inventions, even inventions that are novel and useful, whenever "the subject matter as a whole would have been obvious at the time the invention was made to a person having ordinary skill in the art to which said subject matter pertains." 35 U.S.C. § 103(a). As this Court explained in *Graham v. John Deere Co.*, 383 U.S. 1 (1966), Section 103(a) codified the require-

ment that claimed inventions must take a sufficiently innovative step from the prior art in order to be patentable.

Under *Graham*, the determination whether an invention is obvious requires "factual inquiries" into "the scope and content of the prior art," the "differences between the prior art and the claims at issue," and "the level of ordinary skill in the pertinent art." 383 U.S. at 17. If the hypothetical person of ordinary skill in the relevant art would be capable of making the inventive step from the prior art, then the subject matter of the claimed invention is obvious.

The Federal Circuit has grafted a different and more restrictive test for obviousness onto the plain text of Section 103(a). It holds that a patent examiner or judge may deem a claimed invention that combines elements from the prior art to be obvious, and hence non-patentable, ***only*** if the prior art contains "some suggestion, teaching, or motivation * * * to combine the relevant prior art teachings in the manner claimed." Pet. App. 6a (internal quotation marks omitted). In the absence of such evidence, the Federal Circuit requires a finding of non-obviousness even if common sense dictates the opposite, because in the Federal Circuit's view "'[c]ommon knowledge and common sense,' even if assumed to derive from the [PTO's] expertise, do not substitute for authority." *In re Lee*, 277 F.3d 1338, 1345 (Fed. Cir. 2002).

The Federal Circuit's rigidity in determining obviousness results in the issuance of numerous questionable patents, and erects a substantial—and unjustifiable—barrier to overturning these questionable patents in litigation. Under the Federal Circuit's test, trivial changes to prior art, involving no substantial inventive step, receive patent protection because no documented "teaching, suggestion, or motivation" for the inventions can be identified by patent examiners. These dubious patents enjoy a presumption of validity when questioned in litigation, where they are again insulated against

challenge by the Federal Circuit's requirement of documentation in the prior art.

The Federal Circuit's rule makes it particularly difficult for defendants facing patent-infringement claims to establish obviousness at the summary-judgment stage. Even if the defendant can adduce undisputed evidence of a "teaching, suggestion, or motivation" to combine prior-art references, a court following the Federal Circuit's approach will withhold summary judgment if the patent holder can produce evidence of "secondary" indicia of non-obviousness, such as commercial success. But the holders of even illegitimate patents usually can produce evidence of such secondary factors. Accordingly, a defendant accused of infringing a patent on an obvious invention faces the unpalatable choice of undergoing an expensive trial with potentially bet-the-company stakes or paying an exorbitant settlement.

Technology companies are particularly vulnerable to the harmful practical effects of the Federal Circuit's standard. Hardware and software products often include many different components that can be rearranged in many different combinations. Because the prior art record for hardware and software is incomplete, it is often difficult for both patent examiners and companies accused of infringement to find documentation of prior combinations. The Federal Circuit's standard thus leads to a proliferation of unjustified patents for obvious combinations of prior hardware and software inventions—many of them obtained by patent speculators. The multiplication of such patents has a snowball effect, as others are forced to accumulate patents defensively. This phenomenon imposes huge transaction costs on businesses and the patent system, and obstructs real innovation.

The Federal Circuit's standard for determining obviousness is not supported by the plain language of the Patent Act or this Court's decisions. While documentation in the prior art surely is ***one*** way of demonstrating obviousness, it clearly

is not the ***only*** way the Patent Act permits. The Court should reaffirm its holding in *Graham* that the inquiry as to whether an invention is obvious is a flexible and context-specific one, undertaken from the perspective of a person of ordinary skill in the art, with appropriate but not undue consideration given to "secondary" factors. This will ensure that the requirement of non-obviousness serves as an independent and important limitation on patentability, as Congress intended.

ARGUMENT

I. THE PRACTICAL EFFECTS ON TECHNOLOGY INDUSTRIES OF THE FEDERAL CIRCUIT'S "TEACHING, SUGGESTION, OR MOTIVATION" RULE DEMONSTRATE THE STANDARD'S FLAWS AS A TEST FOR OBVIOUSNESS

The inevitable effect of the Federal Circuit's obviousness standard is to "permit the patenting of extremely trivial innovations" (John H. Barton, *Non-Obviousness,* 43 IDEA 475, 482 (2003)), merely because the documentation necessary to satisfy the Federal Circuit's test is absent. In fact, the Federal Trade Commission has discerned "a trend since the advent of the Federal Circuit toward reducing the size of the step required for patentability—that is, reducing the rigor of the nonobviousness standard." TO PROMOTE INNOVATION: THE PROPER BALANCE OF COMPETITION AND PATENT LAW AND POLICY ch. 4, at 8 (Oct. 2003) (hereinafter "FTC REPORT").

As the Federal Trade Commission explained, "[i]nventive processes typically involve judgment, experience, and common sense capable of connecting some dots. The suggestion test, rigidly applied, assumes away a [person having ordinary skill in the art's] typical levels of creativity and insight and supports findings of nonobviousness even when only a modicum of additional insight is needed." *Id.* at 14. The result is that "patents [are awarded] for inventions that inevitably would be forthcoming." *Ibid.*

By establishing an unwarranted barrier to finding obviousness, the Federal Circuit's standard creates several problems that are particularly acute for technology companies. First, because the Federal Circuit's rule makes it much more difficult to establish obviousness at the summary-judgment stage, the standard unduly inflates the settlement value of claims of infringement arising from questionable patents. Second, the standard results in a proliferation of illegitimate patents for trivial innovations that generate cost and uncertainty without spurring genuine advances. Third, because the Federal Circuit's rule makes the obviousness determination heavily dependent on written proof, it creates a particularly strong—and unjustifiable—bias in favor of patentability in the technology industries, where the prior-art record is incomplete.

A. The Federal Circuit's Test Makes It Difficult To Establish Obviousness At The Summary-Judgment Stage, Making Infringement Claims More Expensive To Litigate And Riskier To Defend

It is critical that defendants in infringement actions have a reasonable chance to establish the invalidity of illegitimate patents at the summary-judgment stage. Defending patent infringement claims is expensive, and trials are unpredictable. If summary judgment is unavailable to defendants, then claimants holding patents of questionable validity will be able to extract exorbitant settlements from defendants who are reluctant to roll the dice on a trial. Under the Federal Circuit's standard, it is in fact inordinately difficult to establish obviousness before trial. The test thus gives the owners of dubious patents undue leverage to extract license fees from the manufacturers of allegedly infringing products.

Patent-infringement litigation is unusually expensive. According to a recent survey, the cost of litigating a patent-infringement case with less than $1 million at risk was ap-

proximately $290,000 through discovery and $500,000 through trial and appeal; the median cost of participating in a case involving between $1 million and $25 million at risk was approximately $1 million through discovery and $2 million through trial and appeal. See Am. Intellectual Prop. Law Ass'n, REPORT OF THE ECONOMIC SURVEY 22 (2003). These sums underestimate actual costs because a significant number of infringement cases involve claims of hundreds of millions of dollars.

Aside from the substantial litigation costs, the magnitude and unpredictability of a potential judgment makes the trial of an infringement case a daunting prospect. Since 2000, the median amount of damages awarded in patent cases following a bench trial has been $1.9 million. See PriceWaterhouseCoopers, 2006 PATENT AND TRADEMARK DAMAGES STUDY, at 3 ("PWC STUDY"). Trial before a jury is even riskier: during the same period, the median jury award was ***$8 million***—nearly ***four times*** the median bench award.

And a growing number of cases involve huge sums. Before 1990, only one patent damage award in history exceeded $100 million. William O. Kerr & Gauri Prakash-Canjels, *Patent Damages and Royalty Awards: The Convergence of Economics and Law*, *in* LES NOUVELLES at 83 (June 2003). In the 1990s, judgments or settlements in 13 cases topped that figure. The last six years have seen 21 more mega-cases, including one award for $1.35 billion. Internet Patent News Service & Source Translation and Optimization Co., *Patent/Copyright Infringement Lawsuits/Licensing Awards*, *at* http://www.iplaw-quality.com/economic/awards.htm.[3] With the potential stakes so high, many defendants simply cannot

[3] The number of patent-infringement claims also is growing. The number of new cases nearly tripled between 1991 and 2004, reaching 3,075 filings in 2004. See PWC STUDY, *supra*, at 3. See also Kerr & Prakash-Canjels, *supra*, at 83.

afford to continue litigating infringement claims that survive summary judgment.

Under any circumstances, establishing patent invalidity at the summary-judgment stage is an uphill battle. An issued patent enjoys a presumption of validity, see 35 U.S.C. § 282, which can be overcome only by clear and convincing evidence, see *Rockwell Int'l Corp. v. United States*, 147 F.3d 1358, 1364 (Fed. Cir. 1998). Accordingly,

> a moving party seeking to invalidate a patent at summary judgment must submit clear and convincing evidence of invalidity so that no reasonable jury could find otherwise. Alternatively, a moving party seeking to have a patent held not invalid at summary judgment must show that the nonmoving party, who bears the burden of proof at trial, failed to produce clear and convincing evidence on an essential element of a defense upon which a reasonable jury could invalidate the patent.

Eli Lilly & Co. v. Barr Labs., Inc., 251 F.3d 955, 962 (Fed. Cir. 2001) (en banc).

While obtaining summary judgment on invalidity is always a challenge, the Federal Circuit's rule on obviousness stacks the deck even more heavily against a company accused of infringement. Failure to adduce the required objective documentation of a "teaching, suggestion or motivation" for the invention necessarily results in the denial of summary judgment to a defendant claiming obviousness.[4] This case is

---

[4] See, *e.g.*, *Turbocare Div. of Demag Delaval TurboMachinery Corp. v. Gen. Elec. Co.*, 214 F. Supp. 2d 170, 181 (D. Mass. 2002) (finding a disputed issue of material fact where there was "no *explicit* suggestion in the technical literature, or on the face of the patents themselves," to combine the prior art in the manner claimed and the patent holder's expert testified that the patent would not have been obvious) (emphasis added); *Emerson Elec. Co. v. Spartan Tool, LLC*, 223 F. Supp. 2d 856, 912 n.48 (N.D.

a perfect example of that phenomenon—the Federal Circuit reversed the district court's grant of summary judgment because the available prior-art references did not anticipate the exact combination at issue with sufficient particularity. See Pet. App. 1a, 12a–16a.

At the same time, a defendant who cannot produce such evidence is vulnerable to a ruling on summary judgment that the invention is non-obvious. In fact, of the five published district court opinions granting summary judgment on the issue of obviousness in 2005, every single one favored the patentee. See Univ. of Houston Law Ctr. Inst. for Intellectual Prop. & Info. Law, *Patstats*, *at* http://www.patstats.org.

Moreover, even if the infringement defendant proffers the requisite documentation of "teaching, suggestion, or motivation," the Federal Circuit's approach makes it easy for the patentee to avoid summary judgment by creating a factual issue. As we discuss further below, the Federal Circuit instructs the lower courts to deny summary judgment if the patent holder submits in rebuttal ***any*** objective evidence of non-obviousness, such as commercial success. *Pro-Mold & Tool Co. v. Great Lakes Plastics, Inc.*, 75 F.3d 1568 (Fed. Cir. 1996); see also Glynn S. Lunney, Jr., *E-Obviousness*, 7 MICH. TELECOMM. & TECH. L. REV. 363, 375 (2001) (observing that the Federal Circuit has elevated "secondary considerations, such as commercial success, * * * to a central, if not dominant, role in the obviousness inquiry").

Ohio 2002) (denying summary judgment because patent challenger did not point to "specific information in the prior art references that suggests their combination"); *Remcor Prods. Co. v. Scotsman Group, Inc.*, 860 F. Supp. 568, 574 (N.D. Ill. 1994) (holding that challenger's failure to "assert a motivation or suggestion in the prior art to combine all three references" precluded summary judgment).

In addition, the Federal Circuit has discouraged lower courts from finding obviousness through the exercise of common sense. See *In re Lee*, 277 F.3d at 1345. These restrictions make it even more difficult for courts to conclude as a matter of law that an invention is obvious, and more likely that any factual dispute related to the issue of obviousness—even a seemingly immaterial one—will result in a costly and risky trial.

The difficulty of proving obviousness at the summary-judgment stage vastly increases the cost of infringement claims. When a patent holder sends a letter demanding licensing fees from an alleged infringer, the target company knows that it may prevail—if at all—only after an expensive trial, and thus may be forced to settle for an inflated sum. As we next discuss, moreover, technology companies may face multiple potential infringement claims in connection with the launch of a single new product. The prospect of expensive and protracted litigation to defeat an infringement claim can create a substantial disincentive to innovation.

B. The Availability Of Patents For Obvious Combinations Of Prior Art Imposes Substantial Costs On Technology Companies

Because of the nature of their products, technology companies are strongly affected by the award of patents to obvious combinations of prior art. Hardware and software products often include many different components, each of which may be covered by different patents. Thus, software programs can consist of millions of lines of codes, FTC REPORT, *supra*, ch. 3, at 44, and "a given semiconductor product * * * will often embody hundreds if not thousands of 'potentially patentable' technologies." Bronwyn H. Hall & Rosemarie Ham Ziedonis, *The Patent Paradox Revisited: An Empirical Study of Patenting in the U.S. Semiconductor Industry, 1979–1995*, 32 RAND J. ECON. 101, 110 (2001). With so many components in each product, opportunities abound

to seek patents for a combination of several components, no matter how obvious, and then argue that any company using that combination must obtain a license.

Under these circumstances, the availability of patents for obvious combinations of prior art has a snowball effect, leading to the proliferation of dubious patents. When patents are easy to obtain, more patent applications are filed. See Adam B. Jaffe & Josh Lerner, INNOVATION AND ITS DISCONTENTS 175 (2004) ("While the increase in the rate of patent applications over the last two decades is driven by many factors, one important factor is the simple fact that it has gotten so much easier to get a patent, so applications that never would have been submitted before now look like they are worth a try."). Patent speculators fuel this trend: as Justice Kennedy has recently pointed out, "[a]n industry has developed in which firms use patents not as a basis for producing and selling goods but, instead, primarily for obtaining licensing fees." *eBay Inc. v. MerExchange, L.L.C.*, 126 S. Ct. 1837, 1842 (2006) (Kennedy, J., concurring). And as more patents are awarded, more companies seek them defensively.

Many questionable patent claims in the technology sector arise in connection with the voluntary standards that are necessary to make technology products interoperable. After a voluntary standard is agreed upon, and products conforming to the standard begin to be manufactured, the manufacturers receive letters—often from previously-unknown patent holders—claiming that any product incorporating the voluntary standard necessarily infringes their patents, and that a license fee must be paid on ***every single*** product that utilizes the standard.[5]

---

[5] See, *e.g.*, Martin LaMonica, *Small Company Makes Big Claims on XML Patents*, CNET News.com, Oct. 21, 2005, *at* http://tinyurl.com/ae9dpq (firm asserts ownership of XML, "a widely used method for storing and sharing information in many forms, from purchase orders to information in Web pages" developed by the

These additions to the patent thicket impede rather than encourage genuine innovation. First, the multiplication of patents for obvious combinations increases both the resources that must be poured into patent searches and the risk of infringement claims—making it more difficult to market new products.[6] Second, the increase in patent applications interferes with the effective administration of the patent system. Indeed, the recent explosion of new patent applications has strained the resources of the PTO and required the hiring of thousands of inexperienced patent examiners. See USPTO, Performance and Accountability Report Fiscal Year 2005, at 3, *available at* http://tinyurl.com/qvjmh (reporting PTO's hiring of new examiners at the rate of 1,000 per year).

World Wide Web Consortium in the 1990s); Peter Judge, *Wi-Fi World Under Threat from Symbol Patent: Wireless Vendor to Seek License Fees from All Wi-Fi Equipment Vendors*, Techworld.com, Sept. 23, 2004, *at* http://tinyurl.com/gjt2s (a number of patent owners claim that their patents are infringed by every device compatible with the Wi-Fi standard for wireless communication); Matt Hines, *Graphics Patent Suit Targets Dell, Others*, CNET News.com, Apr. 23, 2004, *at* http://tinyurl.com/ae73h (firm claiming to own a patent covering the JPEG standard for sharing images on the Internet has sued 30 companies);.

[6] As several panelists explained to the FTC when it explored the issue, "the plethora of patents in the computer hardware industry makes it 'virtually impossible to search all potentially relevant patents, review the claims,' and evaluate the infringement risk." FTC REPORT, *supra*, ch. 2 at 3. See also Julie E. Cohen & Mark A. Lemley, *Patent Scope and Innovation in the Software Industry*, 89 CAL. L. REV. 1, 43 (2001) ("the diffuse nature of the knowledge base and the lack of a comprehensive system for cataloguing and indexing software-related developments defy even the most knowledgeable and diligent examiner[s]"). In these industries, therefore, "the danger that a manufacturer will step on a land mine is all too real." Carl Shapiro, *Navigating the Patent Thicket: Cross Licenses, Patent Pools, and Standard Setting*, in INNOVATION POLICY AND THE ECONOMY 126 (Adam B. Jaffe et al., eds., 2001).

The growth in illegitimate patents for obvious combinations of existing art inhibits innovation in another way: it diminishes the value of the patents on the component parts, even if those components were truly innovative and the combination was not. As one patent law professor has explained:

> "So I get a patent on the telephone, but * * * somebody can get a patent on using the telephone to place business orders, using the telephone to place orders for airline tickets, using the telephone to do other things, then pretty soon I lose my royalties. My royalties are diminished because in order to sell my telephone somebody's going to say well, I'd be willing to pay $100 for the telephone, if I could use it. But now, I've got to pay some money to you, and I've got to pay some money to all these other people who've got patents on the uses of the telephone. So I'll give you $10, and I'll spread out the other money that I'm willing to pay to all these other inventors who've got massive numbers of patents on that."

John Duffy, Address to Am. Enter. Inst. For Pub. Policy Research: The Patent System & the New Ecoomy (Mar. 10, 2005), at http://tinyurl.com/zw3ez; see also FTC REPORT, *supra*, at 5 ("if the required step [for patentability] is too small, * * * an initial inventor must split royalties with improvers that otherwise could not patent in the 'obvious' area around the initial patent") (footnote omitted).

This dilutive effect is particularly pronounced in the technology sector, where a single product may implicate scores of different patents. The resulting reduction in the value of patents on truly innovative inventions is the precise opposite of the result intended by the patent law.

C. The Often-Incomplete Prior-Art Record For Hardware And Software Magnifies The Negative Effect Of The Federal Circuit's Standard

By directing the courts to look only at published materials in making determinations about non-obviousness, the Federal Circuit's test requires an inquiry that often makes little sense. As the National Academies of Science observed, "creative people generally speaking strive to publish *non*-obvious information. So if it is obvious to those of skill in the art to combine references, it is unlikely that they will publish such information." Nat'l Res. Council, A PATENT SYSTEM FOR THE 21ST CENTURY 90 (2004) ("NRC REPORT").

Because of its focus on documentation, the Federal Circuit's test creates especially acute problems for technology patents. Observers of patent law have frequently noted the difficulty of finding records of inventions involving computer hardware and software.[7] Despite ongoing efforts to gather descriptions of otherwise undocumented inventions,[8]

---

[7] See, *e.g.*, Richard S. Gruner, *Everything Old is New Again: Obviousness Limitations on Patenting Computer Updates of Old Designs*, 9 B.U. J. SCI. & TECH. L. 209, 275 (2003) ("These new processing techniques or other computer-based inventions similar to the updates may not appear in the relevant prior art. Therefore, the suggestion and motivation tests may not yield meaningful results * * * ."); Cohen & Lemley, *supra*, 89 CAL. L. REV. at 43 ("the diffuse nature of the knowledge base and the lack of a comprehensive system for cataloguing and indexing software-related developments defy even the most knowledgeable and diligent examiner[s]"); FTC REPORT, *supra*, ch. 4, at 40 ("Locating prior art is particularly difficult for business methods.").

[8] Several organizations are working to gather descriptions of otherwise undocumented computer innovations. The Software Patent Institute, for example, "is dedicated to providing information to the public and assisting the United States Patent and Trademark Office and others by providing technical support in the form of educational and training programs and providing access to infor-

the accessible published prior art remains, at best, an incomplete patchwork that records only a fraction of existing advances. Many of the gaps in the record can be attributed to the patent law, which until recently denied patent protection to most software inventions.[9] The incompleteness of the written record also results from rapidity of innovation, which often leads inventors to bypass publishing their work.[10]

A spotty record of prior art may make it difficult to demonstrate that a claimed hardware or software invention is not ***novel***, but it should not also defeat a showing that an invention is ***obvious***. To the contrary, obviousness should function as an independent basis for defeating patentability when, because of poor documentation, novelty cannot be disproved.

---

mation and retrieval resources concerning software prior art." See Software Patent Institute Database of Software Technologies, *at* www.spi.org/missendo.htm (last visited August 18, 2006).

[9] In the 1970s, "courts generally rejected software patent application on the grounds that software was really just a concatenations of unpatentable algorithms." Cohen & Lemley, *supra*, 89 CAL. L. REV. at 8. Not until 1998 did the Federal Circuit definitively permit patent protection for a freestanding software computer program. See *State Street Bank & Trust Co. v. Signature Fin. Group, Inc.*, 149 F.3d 1368, 1373 (Fed. Cir. 1998); see also *AT&T v. Excel Communications, Inc.*, 172 F.3d 1352 (Fed. Cir. 1999). The long delay in recognizing software patents still affects today's prior art searches.

[10] See Cohen & Lemley, *supra*, 89 CAL. L. REV. at 6 ("The software industry is characterized by a culture of reuse and incremental improvement, a lack of reliance on systems of formal documentation used in other technical fields, the short effective life of software innovations, and the inherent plasticity of microcode."); Hall & Ziedonis, *supra*, 32 RAND. J. ECON. at 102 (firms designing the central processing chips that run computers are "[d]riven by a rapid pace of technological change and short product life cycles").

Instead, under the current standard, the obviousness determination itself also turns heavily on the quality of the published record of prior art: even if an invention combines prior art elements in a manner that truly would be obvious to one skilled in the art, lack of documentation may make it difficult or impossible for patent examiners or litigants to satisfy the Federal Circuit's test. See Barton, *supra*, 43 IDEA at 482 ("The [Manual of Patent Examining Procedure]'s demand that there be suggestions in the prior art as a prerequisite to combine references converts non-obviousness to something near novelty.").

There is no reason why the incomplete published prior-art record for technology inventions should stand in the way of a showing that an invention is obvious. Indeed, the National Research Council for the National Academies of Sciences has specifically recognized that, because "the common general knowledge is not fully described in published literature that is likely to be consulted by patent examiners, another method of determining the state of general knowledge needs to be employed." NRC REPORT, *supra*, at 81.

Moreover, as we next discuss, the Federal Circuit's single-minded focus on documentation is inconsistent with Section 103(a) and this Court's decisions.

II. THIS COURT SHOULD REAFFIRM THE BROAD SCOPE OF THE OBVIOUSNESS INQUIRY AND MAKE CLEAR THAT PROOF OF A SPECIFIC "SUGGESTION, TEACHING, OR MOTIVATION" IS NOT ESSENTIAL TO A FINDING OF OBVIOUSNESS

The legal issue before the Court in this case resembles in key respects the one the Court addressed last Term in *eBay*. There, the governing statute provided that district courts "may grant injunctions" (35 U.S.C. § 283), and this Court had interpreted similar statutory language to require application of the traditional four-factor test for determining the

propriety of injunctive relief. The Federal Circuit nonetheless held that district courts "will issue permanent injunctions * * * absent exceptional circumstances." 126 S. Ct. at 1839. This Court reversed, holding that district courts must exercise their discretion "consistent with traditional principles of equity, in patent disputes no less than in other cases governed by such standards." *Id.* at 1841.

Here, the statute bars issuance of a patent if the claimed invention "would have been obvious at the time the invention was made to a person having ordinary skill in the art to which said subject matter pertains." 35 U.S.C. § 103(a). This Court has construed that language to require a case-specific inquiry akin to the "reasonable person" standard applied in negligence actions. The Federal Circuit's standard curtails the inclusive inquiry mandated by Congress, holding that a patent is obvious only if the prior art contains some "teaching, suggestion or motivation" respecting the claimed invention.

Although the Federal Circuit surely has identified one means of demonstrating obviousness, the lower court's error is its view that this constitutes the ***only*** way to show obviousness. That conclusion is just as inconsistent with the statutory language and this Court's precedents as the rigid Federal Circuit rule overturned in *eBay*. This Court should make clear that obviousness may be demonstrated through ***any*** evidence establishing that the claimed invention would have been obvious "to a person having ordinary skill in the art to which said subject matter pertains."

This Court also should correct another error in the Federal Circuit's understanding of obviousness. Even if the prior art clearly reveals a "teaching, suggestion, or motivation" for the claimed combination of prior art elements, the Federal Circuit refuses to grant summary judgment to the defendant in an infringement action whenever the patent holder musters the sort of circumstantial evidence of non-obviousness that this Court has downplayed as having only "secondary"

status. Because the realities of patent litigation are such that there is almost always at least a triable issue of fact on one of these "secondary" factors, the Federal Circuit's standard effectively deprives defendants in infringement actions of summary disposition, therefore dooming them to the unenviable choice between an expensive trial and an exorbitant settlement. Nothing in the statutory language or this Court's decisions requires that absurd result.

A. The Federal Circuit's "Teaching, Suggestion, Or Motivation" Test Improperly Disregards Other Methods Of Demonstrating That A Claimed Invention Is Obvious To A Person Having Ordinary Skill In The Art

Section 103(a) of the Patent Act of 1952 is a cornerstone of the congressional—and constitutional—policy to grant patent protection to foster the dissemination of technological innovations. See U.S. CONST. art I, § 8, cl. 8 (granting patent power to "promote the progress of science and useful arts"). As one of the principal drafters of the Patent Act of 1952 observed, obvious discoveries do not merit patent protection because they would "be made anyway, without the 'fuel of interest' which the patent system supplies." Giles S. Rich, *The Principles of Patentability*, 42 J. PAT. OFF. SOC'Y 75, 81–82 (1960).

Indeed, Justice Bradley explained over a century ago that conferring patent monopolies on the obvious would "obstruct" rather than "stimulate invention" by "creat[ing] a class of speculative schemers" who would use patents on trifling innovations "to lay a heavy tax upon the industry of the country, without contributing anything to the real advancement of the art[s]." *Atl. Works v. Brady*, 107 U.S. 192, 200 (1883). Thus, Section 103's non-obviousness requirement ensures that "concepts within the public grasp, or those so obvious that they readily could be, are the tools of creation

available to all." *Bonito Boats, Inc. v. Thunder Craft Boats, Inc.*, 489 U.S. 141, 156 (1989).

In *Hotchkiss v. Greenwood*, 52 U.S. (11 How.) 248, 267 (1850), this Court ruled that patent protection does not extend to an "improvement [that] is the work of the skilful [sic] mechanic," rather than "that of the inventor." In *Graham*, this Court concluded that Section 103(a) "was intended merely as a codification" of *Hotchkiss* and subsequent decisions holding that claimed inventions must take a sufficiently innovative step from the prior art to be patentable. 383 U.S. at 17.

In particular, while "the ultimate question of patent validity is one of law," the obviousness determination is informed by "factual inquiries" into "the scope and content of the prior art," the "differences between the prior art and the claims at issue," and "the level of ordinary skill in the pertinent art." *Ibid.* (citation omitted). If the hypothetical person of ordinary skill in the relevant art would be capable of making the inventive step from the prior art, then the subject matter of the claimed invention is obvious. This Court further explained that "secondary considerations," such as "commercial success, long felt but unsolved needs, failure of others, etc.," are "indicia of obviousness or nonobviousness" that "may have relevancy." *Id.* at 18.

The Court in *Graham* expressly eschewed any rigid formula for conducting the non-obviousness inquiry. Instead, the Court explained that the non-obviousness determination would depend on the "given factual context" in a manner akin to other fact-sensitive legal judgments, such as "negligence and scienter," that are "amenable to a case-by-case development." *Ibid.*

Indeed, this Court's post-*Graham* decisions applying the obviousness requirement demonstrate that a claimed invention may be obvious or non-obvious for a variety of reasons. For example, in *United States v. Adams*, 383 U.S. 39 (1966), the Court ruled that a combination patent on a new type of

battery was non-obvious not merely because the prior art did not suggest combining the elements in the manner claimed, but rather because the prior art taught ***away*** from the new combination, the new battery "unexpected[ly]" functioned better than predecessor batteries, and "noted experts expressed disbelief" that the new battery could possibly work. *Id.* at 51–52.

In *Sakraida v. Ag Pro, Inc.*, 425 U.S. 273 (1976), the Court deemed a combination patent on a "water flush system to remove cow manure from the floor of a dairy barn" to be obvious because the manner in which the publicly known elements were rearranged merely "exploit[ed] * * * the principle of gravity" without demonstrating any synergistic effect. *Id.* at 282.

And in *Dann v. Johnston*, 425 U.S. 219 (1976), the Court held that a computerized system for "provid[ing] bank customers with an individualized and categorized breakdown of their transactions during the period in question" was obvious because, given the "extensive use of data processing systems in the banking industry" and the patented system's similarity in "characteristics and capabilities" to known computerized data processing systems, "[t]he gap between the prior art and respondent's system is simply not so great as to render the system nonobvious to one reasonably skilled in the art." *Id.* at 222, 229–30.[11]

---

[11] Nor do the obviousness decisions preceding the 1952 Patent Act, which Section 103 codifies, *Graham*, 383 U.S. at 17, contain a rigid "teaching, suggestion, or motivation" requirement. See, *e.g.*, *Great Atl. & Pac. Tea Co. v. Supermarket Equip. Corp.*, 340 U.S. 147, 151–52 (1950); *Toledo Pressed Steel Co. v. Standard Parts, Inc.*, 307 U.S. 350, 356 (1939); *Lincoln Eng'g Co. of Ill. v. Stewart-Warner Corp.*, 303 U.S. 545, 549 (1938); *Adams v. Bellaire Stamping Co.*, 141 U.S. 539, 542 (1891); *Reckendorfer v. Faber*, 92 U.S. 347, 357 (1875); *Hailes v. Van Wormer*, 87 U.S. 353, 368 (1873); *Hotchkiss*, 52 U.S. (11 How.) at 265–67.

The common-sense, case-specific approach with which this Court has evaluated obviousness adheres to the intent of Section 103(a) much more closely than the Federal Circuit's rigid formulation. By requiring objective evidence in the prior art of a teaching, suggestion, or motivation to combine known elements, the Federal Circuit's test substantially conflates non-obviousness with novelty and that inquiry's single-minded focus on the precise content of the prior art.

Even more importantly, the court of appeals' view disregards the ability of a "person of ordinary skill in the art" to rearrange old elements without being told, merely by exercising common sense, especially if the innovative step is a trifling one. Under this approach, even the most trivial rearrangement of prior art elements may receive patent protection, as long as the particular combination has not been written down before.

For example, in one case, the Federal Circuit reversed a determination by the PTO that a claimed invention of a lawn trash bag having a Halloween pumpkin design was obvious because the prior art references—describing conventional trash bags and methods for making "paper bag pumpkins"—did not specifically suggest the combination of those references. See *In re Dembiczak*, 175 F.3d 994, 997, 1000 (Fed. Cir. 1999). Although common sense dictates that such a combination is obvious, the Federal Circuit ruled that the PTO could not rely on common sense in determining that the decorated trash bags were not patentable.

In fact, the Federal Circuit has repeatedly ruled that "[c]ommon knowledge and common sense" ***never*** adequately substitute for evidence of a "specific hint or suggestion" to combine the prior art references. *In re Lee*, 277 F.3d at 1344–45; see also *In re Huston*, 308 F.3d 1267, 1280 (Fed. Cir. 2002) (affirming invalidation of combination patent as obvious in light of "common knowledge and common sense," only because the Board of Patent Appeals also "has found the

motivation [for the combination] in the prior art references themselves"); *In re Zurko*, 258 F.3d 1379, 1386 (Fed. Cir. 2001) ("The Board cannot simply reach conclusions based on its own understanding or experience—or on its assessment of what would be basic knowledge or common sense [to one of ordinary skill in the art]."). While the Federal Circuit's standard has frequently been applied to invalidate findings of obviousness in appeals from PTO determinations, the standard is even more difficult to satisfy when defending against an infringement claim in district court—where a patent's invalidity must be established by "clear and convincing" evidence.

The Federal Circuit's approach is not only inconsistent with this Court's decisions, it also conflicts with the way other nations with similar patent systems avoid giving patents to obvious inventions. The European Union's analogue to obviousness is the "inventive step" requirement. See European Patent Convention art. 52(1), 56, 1065 U.N.T.S. 255 (1973). In identifying patent applications that lack the requisite "inventive step," the EU does ***not*** impose any requirement paralleling the Federal Circuit's "teaching, suggestion, or motivation" rule. As one commentator has written, "It is normally regarded as part of the skill of a skilled person that, being aware of the literature in his own and related fields, he is in principle capable of seeking and recognising technical developments which can be derived from simple combinations of documents within such literature." Gerald Paterson, THE EUROPEAN PATENT SYSTEM 549 (2d ed. 2001).

The flexibility in assessing claimed inventions for obviousness that this Court prescribed in *Graham* is a sensible construction of Section 103(a) for the additional reason that the obviousness inquiry must be structured to produce equivalent results in all fields of scientific and technical knowledge. Even if there were a convincing argument that the content of the prior art could somehow serve as a sure barometer of obviousness in mature fields (and we believe

there is not), such an argument could only rest on the view that, because of the sheer abundance of the prior art, the absence of a teaching, suggestion, or motivation permits an inference of non-obviousness. That reasoning is wholly inapplicable to fields such as computer hardware and software, in which the prior art less visibly illuminates the ability of the person of ordinary skill in the art to combine prior-art references. That fact provides another basis for rejecting the court of appeals' straitjacket on the obviousness inquiry.

The Federal Circuit has justified its standard as a necessary bulwark against "hindsight-based obviousness analysis." Pet. App. 6a–7a (quoting *In re Dembiczak*, 175 F.3d at 999). But the Federal Circuit's desire to minimize hindsight bias, however salutary, does not justify its adoption of a prophylactic test that departs from the standard mandated by Congress. See, *e.g.*, *Dir. Office of Workers' Comp. Programs, Dep't of Labor v. Newport News Shipbuilding & Dry Dock Co.*, 514 U.S. 122, 135–36 (1995) (explaining that the "proposition that the statute at hand should be liberally construed to achieve its purposes * * * does not add features that will achieve the statutory 'purposes' more effectively").

Decision-makers should, of course, take steps to avoid hindsight bias: this Court has commended the use of "secondary considerations" as objective indicia of non-obviousness that help guide district courts in conducting obviousness inquiries. See *Graham*, 383 U.S. at 17–18. But the Court has carefully explained that these objective indications of non-obviousness do not necessarily override other factors pointing toward obviousness. See *Sakraida*, 425 U.S. at 282–83; *Anderson's-Black Rock, Inc. v. Pavement Salvage Co.*, 396 U.S. 57, 61 (1969).

The Federal Circuit has taken the opposite approach—adopting a narrow inquiry that trumps the broad statutory test. But it has ignored the risk—a risk that most observers believe has materialized—that its cure is worse than the dis-

ease. Its test forces courts and examiners to close their eyes to entire categories of evidence of obviousness out of an inordinate fear of hindsight bias. The appropriate safeguard against hindsight bias is, instead, careful application of the standard announced by the Court in *Graham*.[12]

Finally, defenders of the Federal Circuit's approach argue that it does not circumscribe the obviousness inquiry, pointing to that court's statements that teaching, suggestion, or motivation "may be found * * * implicitly * * * in the knowledge of those of ordinary skill in the art that certain references * * * are of special interest or importance in the field," or "from the nature of the problem to be solved, 'leading inventors to look to references relating to possible solutions to that problem.'" Pet. App. 6a (citations omitted). A more recent Federal Circuit decision contends that its teaching, suggestion, motivation test is "consistent with" Section 103(a) and *Graham* by downplaying the starring role that the Federal Circuit's test assigns to evidence from prior art in determining obviousness. *In re Kahn*, 441 F.3d 977, 987 (Fed. Cir. 2006).

Nevertheless, the majority of the Federal Circuit's decisions still require "objective evidence" of a particular "teaching, motivation, or suggestion to * * * combine the [prior art] references." *In re Lee*, 277 F.3d at 1343; see also *In re Zurko*, 258 F.3d at 1386 (requiring "concrete evidence" of prior art teaching, suggesting, or motivating combination); *In re Dembiczak*, 175 F.3d at 999 (refusing to deem claimed invention to be obvious absent "actual evidence" showing a

---

[12] Significantly, the other inquiries to which this Court in *Graham* analogized the obviousness test—negligence and scienter—also carry a risk of hindsight bias. When an accident causing substantial harm is examined retrospectively, there is a natural impulse to conclude that a "reasonable person" would have taken some action to avoid the harm. Yet the tort standard does not incorporate a prophylactic barrier against that impulse.

"clear and particular" reason to combine the prior art references); *C.R. Bard, Inc. v. M3 Sys., Inc.*, 157 F.3d 1340, 1351–52 (Fed. Cir. 1998) (ruling that a "teaching or suggestion or motivation" to combine prior art references is an "essential evidentiary component" of any obviousness determination).

If the Federal Circuit in fact applies a broader standard, then rejection by this Court of its narrow test will simply clarify the law—just as this Court's holding in *eBay* eliminated any doubt about the governing standard. This Court should unambiguously reject the view that evidence of a teaching, suggestion and motivation is the ***only*** way of showing that an invention is obvious and hence unpatentable.

B. The Federal Circuit Places Inordinate Weight On "Secondary" Circumstantial Evidence Of Obviousness

As discussed above, even when a defendant in an infringement action points to objective evidence of a "teaching, suggestion, or motivation" to combine the elements of the claimed invention, the Federal Circuit generally withholds summary judgment of invalidity if the patent holder submits ***any*** circumstantial evidence of nonobviousness, such as commercial success or long felt but unsolved needs.

Although this Court in *Graham* downplayed this sort of evidence as constituting "***secondary*** considerations" of nonobviousness that "***may*** have relevancy" (383 U.S. at 17–18 (emphases added)), the Federal Circuit insists that this evidence deserves equal billing with conclusions derived from the prior art, even if based upon the Federal Circuit's documented prior-art standard. *Hybritech Inc. v. Monoclonal Antibodies, Inc.*, 802 F.2d 1367, 1380 (Fed. Cir. 1986).[13] The

---

[13] See also *Tec Air, Inc. v. Denso Mfg. Mich. Inc.*, 192 F.3d 1353, 1360 (Fed. Cir. 1999) ("[O]bjective evidence of non-obviousness may be used to rebut a *prima facie* case of obviousness based on

Federal Circuit has even instructed that "evidence of secondary considerations may often be the ***most*** probative and cogent evidence in the record." *Stratoflex, Inc. v. Aeroquip Corp.*, 713 F.2d 1530, 1538 (Fed. Cir. 1983) (emphasis added); see *In re Piasecki*, 745 F.2d 1468 (Fed. Cir. 1984) (reversing trial court's finding of obviousness based on secondary considerations); *Simmons Fastener Corp. v. Ill. Tool Works, Inc.*, 739 F.2d 1573, 1575–76 (Fed. Cir. 1984) (same).

The Federal Circuit's undue emphasis on "secondary considerations" of non-obviousness has no basis in either Section 103(a) or this Court's decisions. To the contrary, this Court has reiterated that these sorts of "secondary considerations" do not "tip the scales of patentability" when review of the prior art reveals that a claimed invention was obvious to a person of ordinary skill in the art. *Graham*, 383 U.S. at 36; see also *Sakraida*, 425 U.S. at 282–83; *Anderson's-Black Rock*, 396 U.S. at 62–63. As this Court has explicitly instructed, "commercial success without invention will not make patentability." *Great Atl. & Pac. Tea Co.*, 340 U.S. at 153.

---

prior art references.") (internal quotation marks omitted); *Panduit Corp. v. Dennison Mfg. Co.*, 810 F.2d 1561, 1570 (Fed. Cir. 1987) ("[A] court [must] withhold a conclusion of obviousness until it has fully assessed the impact of any objective evidence of nonobviousness."); *Alco Standard Corp. v. Tenn. Valley Auth.*, 808 F.2d 1490, 1499–1501 (Fed. Cir. 1986) (finding that evidence of commercial success and long felt needs demonstrated nonobviousness even though "the prior art provides significant support for the appellants' contention that the '006 patent would have been obvious"); *Stratoflex, Inc. v. Aeroquip Corp.*, 713 F.2d 1530, 1538–39 (Fed. Cir. 1983) (holding that "evidence rising out of the so-called 'secondary considerations' must always when present be considered," and noting that it "may often establish that an invention appearing to have been obvious in light of the prior art was not").

The ill effects of the Federal Circuit's approach are demonstrated by the Federal Circuit's treatment of the commercial success factor. Summary judgment on obviousness is virtually unavailable to alleged infringers because some evidence of commercial success is available in virtually every contested case. After all, it is only when money is at stake—that is, when a challenged patent appears to have met with some commercial success—that litigation is worthwhile. See FTC REPORT, *supra*, ch. 4, at 16 ("Yale University President Richard Levin and U.S. District Judge T.S. Ellis III * * * voiced concern that the commercial success test has 'diluted' or 'trivialized' the obviousness inquiry") (footnotes omitted); see also *Pro-Mold & Tool*, 75 F.3d at 1573–74; *Simmons*, 739 F.2d at 1574–76.

As Professor Kitch warned 40 years ago, reliance on secondary considerations such as commercial success to resolve questions of patent validity leads to a rule "that all patents that are litigated should be held valid," because "it is unlikely that patents that are not commercially successful will be brought to litigation." Edmund W. Kitch, *Graham v. John Deere Co: New Standards for Patents*, 1966 SUP. CT. REV. 293, 333. These results, all stemming from the Federal Circuit's obviousness test, illustrate the problems it has caused.

The secondary factors surely are relevant, as this Court held in *Graham*. The Federal Circuit's error is that it automatically elevates these facts to the status of material facts precluding summary judgment regardless of the other evidence relating to obviousness and regardless of how these facts fit into the overall picture. For example, as the FTC pointed out, "[e]ven if commercial success reflects a claimed invention's economic significance, economic significance does not necessarily reflect technical significance * * * so a commercial success standard will not necessarily yield accurate nonobviousness results." FTC REPORT, *supra*, ch.4, at

18. Courts therefore should be cautious about attributing weight to this factor.[14]

Again, the Federal Circuit has lost sight of the governing legal standard. This Court should make clear that the application of the summary-judgment standard turns upon the factual record in each case, and reject the Federal Circuit's transformation of a rule identifying relevant evidence into a substantive standard for obviousness.

[14] The EU does not follow the Federal Circuit's practice of ascribing heavy weight to "secondary factors" of non-obviousness, such as commercial success. Rather, the European Patent Office has instructed that "a mere investigation for indications of the presence of inventive step is no substitute for the technically skilled assessment of the invention." T24/81 *BASF/Metal refining* O.J. EPO 1983, 133; [1979-85] E.P.O.R.: B:354. In other words, according to the EPO, "such so-called secondary indicia in support of an inventive step represent auxiliary considerations which can in certain cases facilitate a decision. . . . However, [their] presence does not mean that an inventive step must be recognized." T270/89 ICI/Fusecord [1987] E.P.O.R. 193 (cases cited in Paterson, *supra*, at 560 n.116; 561 n.117).

CONCLUSION

The judgment of the court of appeals should be reversed.

Respectfully submitted.

ANDREW J. PINCUS
Counsel of Record
MIRIAM R. NEMETZ
EVAN P. SCHULTZ
KEVIN S. RANLETT
Mayer, Brown, Rowe & Maw LLP
1909 K Street, NW
Washington, DC 20006
(202) 263-3000

AUGUST 2006

845A

(36)

No. 04-1350

FILED
OCT 16 2006
OFFICE OF THE CLERK
SUPREME COURT, U.S.

In The
Supreme Court of the United States

KSR INTERNATIONAL CO.,

Petitioner,

v.

TELEFLEX INC., AND
TECHNOLOGY HOLDING CO.,

Respondents.

On Writ Of Certiorari To The United States Court Of Appeals For The Federal Circuit

BRIEF OF CHEMISTRY AND BIOENGINEERING PROFESSORS AS *AMICI CURIAE* IN SUPPORT OF RESPONDENTS

HENRY L. BRINKS
Counsel of Record
MEREDITH MARTIN ADDY
K. SHANNON MRKSICH, PH.D.
BRINKS HOFER GILSON & LIONE
NBC Tower – Suite 3600
455 North Cityfront Plaza Drive
Chicago, Illinois 60611
(312) 321-4200

Counsel for Amici Curiae

October 16, 2006

COCKLE LAW BRIEF PRINTING CO. (800) 225-6964
OR CALL COLLECT (402) 342-2831

QUESTION PRESENTED

Whether the Federal Circuit has erred in holding that a claimed invention cannot be held "obvious", and thus unpatentable under 35 U.S.C. § 103(a), in the absence of some proven "'teaching, suggestion, or motivation' that would have led a person of ordinary skill in the art to combine the relevant prior art teachings in the manner claimed."

TABLE OF CONTENTS

	Page
QUESTION PRESENTED	i
TABLE OF CONTENTS	ii
TABLE OF AUTHORITIES	iii
INTEREST OF THE *AMICI CURIAE*	1
SUMMARY OF ARGUMENT	3
ARGUMENT	5
I. THE TSM TEST IS CONSISTENT WITH *GRAHAM* AND IS USEFUL FOR ASSESSING OBVIOUSNESS	5
A. The TSM Test Is Consistent With *Graham*...	6
B. The TSM Test Is A Useful Way To Assess Obviousness Under The *Graham* Standard...	6
II. A "SYNERGY" ANALYSIS FOR ASSESSING OBVIOUSNESS IS INCONSISTENT WITH *GRAHAM*	8
A. A "Synergy" Requirement Would Improperly Exclude Legitimate Inventions And Improperly Include Subject Matter Not Patentable Under *Graham*	8
B. The "Synergy Test" Previously Has Been Found To Be Unworkable	12
III. A "SYNERGY" REQUIREMENT WOULD RENDER MANY GREAT INNOVATIONS UNPATENTABLE	14
CONCLUSION	17

TABLE OF AUTHORITIES

Page

CASES

Alza Corp. v. Mylan Labs., Inc., 2006 WL 2556356 (Fed. Cir. Sept. 6, 2006) 13

Anderson's-Black Rock, Inc. v. Pavement Salvage Co., Inc., 396 U.S. 57 (1969) 12

Application of Bergel, 292 F.2d 955 (CCPA 1961) 5

Ashland Oil, Inc. v. Delta-Resins & Refractories, Inc., 776 F.2d 281 (Fed. Cir. 1985) 13

Bonito Boats, Inc. v. Thunder Craft Boats, Inc., 489 U.S. 141 (1989) 13

Dann v. Johnston, 425 U.S. 219 (1976) 6

Dolbear v. American Bell Tel. Co., 126 U.S. 1 (1888) 14

Dystar Testilfarben GMBH v. C.H. Patrick Co., 2006 WL 28006466 (Fed. Cir. Oct. 3, 2006) 6

Graham v. John Deere Co., 383 U.S. 1 (1966) .....*passim*

In re Kahn, 441 F.3d 977 (Fed. Cir. 2006) 6, 14

In re Oetiker, 977 F.2d 1443 (Fed. Cir. 1992) 6

In re Soni, 54 F.3d 746 (Fed. Cir. 1995) 9

Medichem, S.A. v. Rolabo, S.L., 437 F.3d 1157 (Fed. Cir. 2006) 11

Republic Indus., Inc. v. Schlage Lock Co., 592 F.2d 963 (7th Cir. 1979) 8, 11, 12, 13, 15

Sakraida v. Ag Pro, Inc., 425 U.S. 273 (1976) 12

Stratoflex, Inc. v. Aeroquip Corp., 713 F.2d 1530 (Fed. Cir. 1983) 12, 13

United States v. Adams, 383 U.S. 39 (1966) 9, 11

TABLE OF AUTHORITIES – Continued

Page

CONSTITUTIONAL PROVISIONS, STATUTES, RULES, AND REPORTS

U.S. Constitution, art. III, § 8, cl. 8 7

35 U.S.C. § 103(a) 10

Supreme Court Rule 37.6 1

Manual of Patent Examining Procedure (MPEP) § 2141 13

Official Gazette of the United States Patent and Trademark Office, Vol. 949, No. 1 13

H.R. Rep. No. 97-312 (1981) 13

OTHER AUTHORITIES

George M. Sirilla, Giles S. Rich, *35 U.S.C. § 103: From Hotchkiss to Hand to Rich the Obvious Patent Law Hall-of-Famers,* 32 J. MARSHALL L. REV. 437 (1999) 12

Giles S. Rich, *Laying the Ghost of the "Invention" Requirement,* 1 AM. PAT. LAW ASS'N Q.J. 26 (1972) 11, 16

Harold C. Wegner, *Seven IP Cases on the Radar Screen for the October 2005 Term of the Court,* Sept. 7, 2005 4

MERRIAM-WEBSTER'S COLLEGIATE DICTIONARY 1268 (11th ed. 2003) 9

PATENTS

U.S. Patent No. 174,465 14

U.S. Patent No. 223,898 14

U.S. Patent No. 821,393 15

TABLE OF AUTHORITIES – Continued

Page

PETITION FOR WRIT OF CERTIORARI

KSR International Co. v. Teleflex Inc. et al., No. 04-1350 (2005) 4

INTEREST OF THE *AMICI CURIAE*[1]

Collectively, *amici* have authored over 600 scientific publications and are inventors on over 200 U.S. patents and published patent applications. Other scientists have cited their patents and publications over 3,000 times.[2] *Amici* serve as editors and reviewers of various scientific journals and are recognized as leaders in their fields. They present seminars on their research around the country at various university and technical meetings. *Amici* have formed more than 5 companies, many of which are now publicly traded, and they serve on the boards of a host of other companies. *Amici* hold teaching positions at this country's elite universities. Hence, *amici* are highly qualified to comment on the test for obviousness. A brief summary of their research and a sampling of their awards appear below, along with links to their websites for more complete information.

Dr. David R. Walt is Professor of Chemistry at Tufts University and a Howard Hughes Medical Institute Professor. He is a Fellow of the American Association for

---

[1] Both parties have consented to the filing of this brief and written consents have been filed with the clerk. Pursuant to Supreme Court Rule 37.6, *amici* represent that this brief was not authored in whole or in part by counsel for any party, and that no person or entity other than *amici* and their counsel has made a monetary contribution to the preparation or submission of this brief. The names of the educational institutions are provided for identification purposes only, and the institutions have not reviewed or approved this brief.

[2] Statistics taken from searches of the following databases: Delphion, Dialog SciSearch, and United States Patent and Trademark Office (www.uspto.gov).

the Advancement of Science. He is a leader in the development of sensors with particular focus in fluorescent and fiber-optic biosensors. His pioneering research in the field of optical sensors has led to the explanation of fundamental principles as well as important applications of sensors. (http://ase.tufts.edu/chemistry/walt).

Dr. Barbara Imperiali is Professor of Chemistry and Professor of Biology at Massachusetts Institute of Technology. She is a Fellow of the American Academy of Arts and Sciences and was elected to the Royal Society of Chemistry. She developed strategies to engineer protein structure and function, and the design and implementation of new chemical sensor probes in the study of complex biological systems. (http://web.mit.edu/chemistry/www/faculty/imperiali.html).

Dr. Chad A. Mirkin is Professor of Chemistry and of Medicine at Northwestern University. He is a Fellow of the American Association for the Advancement of Science and has received the NIH Director's Pioneer Award and the Raymond and Beverley Sackler Prize. His research focuses on developing fabrication tools for nanotechnology and developing biosensors based on nanoparticles. (http://www.chem.northwestern.edu/~mkngrp).

Dr. Milan Mrksich is a Professor of Chemistry at the University of Chicago and is a Howard Hughes Medical Institute Investigator. He is a Fellow of the American Association for the Advancement of Science and has received the TR100 Young Innovator Award and the Searle Scholar Award. His research group has a broad interest in areas that intersect chemistry, biology, and materials with

an emphasis on biomaterials and biosensors. (http://chemistry.uchicago.edu/fac/mrksich.shtml).

Dr. Stephen Quake is a Professor of Bioengineering at Stanford University and is a Howard Hughes Medical Institute Investigator. His awards include the NIH Director's Pioneer Award, the TR100 Young Innovator Award, and a Packard Fellowship. He pioneered the development of integrated microfluidic devices for large scale automation of biological processes. (http://med.stanford.edu/profiles/Stephen_Quake/html).

Dr. Rustem Ismagilov is a Professor of Chemistry at the University of Chicago. His awards include Arthur C. Cope Scholar Award and the Presidential Early Career Awards for Scientists and Engineers. His research uses microtechnology to control and understand complex chemical and biological processes. He also develops technologies for obtaining the structures of proteins for use in drug discovery programs. (http://chemistry.uchicago.edu/fac/ismagilov.shtml).

SUMMARY OF ARGUMENT

Petitioner proposes gutting the Federal Circuit's "teaching-suggestion-motivation test" ("TSM test") for obviousness but does not propose any workable test to replace it. Petitioner identifies the so-called "synergy test"; however, neither Petitioner nor its *amici* provide a workable definition for "synergy," nor do they provide objective guidelines for its application. The most common definition of "synergy" requires that the "sum must exceed the

individual parts." From the perspective that "there is nothing new under the sun," most inventions are combinations of known elements. Fundamentally, many great inventions are simple and often elegant combinations of old elements. *Amici* believe that, if a "synergy" requirement is adopted as the means for determining obviousness, then most innovations will be deprived of patent protection. The ultimate result would be the stifling of future innovation.

Injecting a "synergy" requirement into the patent law also would call into question hundreds of thousands of previously allowed or issued patent claims; create a nearly incalculable burden on the U.S. Patent and Trademark Office ("PTO") to reexamine such claims; cause innumerable licenses to become suspect; and significantly increase the volume of litigation challenging existing patents.[3] Indeed, Petitioner admits that the outcome of this case will affect every pending U.S. patent application, every issued U.S. patent, and every U.S. federal court challenge to the validity of a patent.[4]

Changing the standard of obviousness by imposing a "synergy" requirement into the law likely will lead to unintended and ill results to many industries. The U.S. patent system is the most successful in the world. Not just

---

[3] *See* Harold C. Wegner, *Seven IP Cases on the Radar Screen for the October 2005 Term of the Court*, Sept. 7, 2005 (http://patentlaw.typepad.com/patent/WegnerSCOTUS05.pdf).

[4] Petition for Writ of Certiorari, *KSR International Co. v. Teleflex Inc. et al.*, No. 04-1350, at 1-2 (2005).

our economy, but the global economy, may be adversely affected by adoption of the "synergy" requirement Petitioner now proposes.

ARGUMENT

I. THE TSM TEST IS CONSISTENT WITH *GRAHAM* AND IS USEFUL FOR ASSESSING OBVIOUSNESS

In *Graham v. John Deere Co.*, this Court set forth the following standard for determining obviousness:

> Under § 103, the scope and content of the prior art are to be determined; differences between the prior art and the claims at issue are to be ascertained; and the level of ordinary skill in the pertinent art resolved. Against this background, the obviousness or nonobviousness of the subject matter is determined. Such secondary considerations as commercial success, long felt but unsolved needs, failure of others, etc., might be utilized to give light to the circumstances surrounding the origin of the subject matter sought to be patented.

383 U.S. 1, 17-18 (1966). Staying within these boundaries, the Federal Circuit's predecessor court implemented a suggestion test to assist with the determination of what subject matter one of ordinary skill in the art would consider obvious. *See Application of Bergel*, 292 F.2d 955, 956 (CCPA 1961). Similarly, the TSM test asks "whether a person of ordinary skill in the art, possessed with the understandings and knowledge reflected in the prior art,

and motivated by the general problem facing the inventor, would have been led to make the combination recited in the claims." *In re Kahn*, 441 F.3d 977, 988 (Fed. Cir. 2006) (internal citation omitted).

A. The TSM Test Is Consistent With *Graham*

The determination of nonobviousness must be based upon the perspective of one of ordinary skill in the art. *Graham*, 383 U.S. at 17-18; *see also Dystar Testilfarben GMBH v. C.H. Patrick Co.*, 2006 WL 28006466, at *6 (Fed. Cir. Oct. 3, 2006). Thus, during the examination of a patent application, the examiner is required to step into the shoes of one of ordinary skill in the art when performing an obviousness analysis. Indeed, for purposes of an obviousness rejection, an examiner may only cite against a patent application, references in the field of the applicant's endeavor or references that a person of ordinary skill in the art would reasonably be expected to look to for a solution to the problem – *i.e.*, "analogous art." *See In re Oetiker*, 977 F.2d 1443, 1447 (Fed. Cir. 1992). The analogous art test "has long been part of the primary *Graham* analysis articulated by the Supreme Court." *Kahn*, 441 F.3d at 986-87 (citing *Dann v. Johnston*, 425 U.S. 219, 227-29 (1976)). The Federal Circuit's TSM test "picks up where the analogous art test leaves off and informs the Graham analysis." *Id.* at 987.

B. The TSM Test Is A Useful Way To Assess Obviousness Under The *Graham* Standard

Amici are recognized by the PTO and the bar as persons of at least ordinary skill in their fields. As such, *amici* are called upon regularly for their opinions during

obviousness determinations. *Amici* realize that, although no test is perfect for all situations, any change in how obviousness is determined must be made with caution. A test that may work only for a limited type of patent-worthy inventions will not serve the purpose of the patent laws as set forth in the Constitution: "to promote the progress of science and the useful arts." U.S. Constitution, art. III, § 8, cl. 8. In their experience, *amici* have found that the TSM test allows a broad range of innovations to obtain patent protection, while it precludes such protection for claimed subject matter that persons of ordinary skill in the art would consider obvious. In contrast, and to the extent it can be understood, Petitioner's proposed "synergy" requirement would recognize only a sliver of innovations deserving of patent protection because many such inventions simply are not "synergistic."

Amici consult scientific publications during their research. They review the publications of their peers and comment on the measure of advancements for various scientific journals. They review grant applications of peers and provide recommendations for their funding to various agencies such as the National Institutes of Health, the National Science Foundation, the Defense Department, etc. Thus, *amici* have an understanding of what those of skill in their arts would recognize as a teaching, suggestion or motivation in the art. The TSM test is a practical test that allows *amici* to predict with reasonable accuracy whether conducting proposed research may result in a patentable invention. In contrast, the untenable "synergy test" proposed by Petitioner would preclude *amici* and other innovators from predictably defining or applying the test to enable them to evaluate the potential value of proposed research.

II. A "SYNERGY" ANALYSIS FOR ASSESSING OBVIOUSNESS IS INCONSISTENT WITH *GRAHAM*

A. A "Synergy" Requirement Would Improperly Exclude Legitimate Inventions And Improperly Include Subject Matter Not Patentable Under *Graham*

Petitioner fails to show how "synergy" relates to the determination of whether an invention would be obvious to one of ordinary skill in the art. *See Republic Indus., Inc. v. Schlage Lock Co.*, 592 F.2d 963, 971 (7th Cir. 1979) ("the concept [of synergism] does not bear any logical *ipso facto* relationship to obviousness"). Instead, Petitioner's proposed "synergy" requirement improperly recognizes only a small subset of innovations as patentable: those that somehow create a result greater than the sum of their parts or those for which one element of a combination functions differently in combination than it did individually. *See* Petitioner's Brief, pp. 4-5. Similarly, Petitioner's proposed "synergy" requirement would improperly award patent protection to "synergistic" combinations, even though such combinations are *known* in the art to be "synergistic." In at least these ways, the "synergy" requirement departs from *Graham*'s requirement to determine the differences between the prior art and the claim at issue. These differences are to be analyzed from the viewpoint of one of ordinary skill in the art, considering the invention as a whole.

1. A "Synergy Test" Would Improperly Exclude Inventions Having Unexpected Results

Under the current standard, even if the claim initially appears to be obvious, a finding of obviousness may

be avoided if one of ordinary skill in the art would consider the claimed subject matter to be unexpected in view of the prior art. *See United States v. Adams*, 383 U.S. 39, 51-52 (1966) (indicating that a greater than expected result is an evidentiary factor relevant to nonobviousness). Petitioner's proposed "synergy" requirement, however, excludes unexpected, but non-"synergistic" inventions that would be patentable under the *Graham* standard. "Unexpected" is not synonymous with "synergistic." *See* MERRIAM-WEBSTER'S COLLEGIATE DICTIONARY 1268, 1366 (11th ed. 2003) (defining "unexpected" as "not expected; unforeseen" and "synergism" as "interaction of discrete agencies (as industrial firms), agents (as drugs), or conditions such that the total effect is greater than the sum of the individual effects").

The fact that a result is unexpected does not make it "synergistic." Unexpected results often are used to convince the PTO of the patentability of a claimed invention. *See, e.g., In re Soni*, 54 F.3d 746, 750 (Fed. Cir. 1995). For example, the combination of smaller versions of known elements in nanotechnology inventions typically leads to unexpected results that may be used to demonstrate nonobviousness under the current standard. These results, although unexpected, are not necessarily "synergistic."

2. A "Synergy Test" Would Improperly Include Subject Matter Not Patentable Under *Graham*

Although a "synergistic" result may be a type of an unexpected result, a "synergistic" result is not necessarily unexpected. Indeed, the results of some combinations are expected by those of skill in the art to have properties greater than the sum of the individual parts. For example,

in chemistry, combining certain metals with certain ligands results in complexes with catalytic properties – where neither the metals nor the ligands alone exhibit those catalytic properties. To the extent that a new combination of these metals and ligands is discovered that exhibits catalytic properties, that new combination may be "synergistic" under the proposed "synergy test." However, the result nonetheless may be expected by those of skill in the art, and hence, the combination may not qualify as patentable under the patent statute.

Thus, Petitioner's proposed "synergy test" would improperly allow patent protection for categories of inventions whose results may be "synergistic" but also may be expected. Yet, Petitioner's proposed test would improperly preclude patent protection for inventions involving results that are unexpected, but not "synergistic." Under the *Graham* analysis, however, such inventions with unexpected yet non-synergistic results may be patentable.

3. The "Synergy Test" Fails To Consider The Invention As A Whole

Section 103 compels consideration of the invention as a whole. *See* 35 U.S.C. § 103(a). Taking the discrete elements of an invention and comparing them to the prior art is improper. *See Graham*, 383 U.S. at 32. Consider, for example, a new chemical compound. All the underlying elements can be found in the prior art; hence, comparing them separately to the prior art would render the chemicals themselves obvious. Without comparing the invention as a whole to the prior art, the decision-maker misses what the person of ordinary skill thought was innovative, the compound itself. Only by looking through the eyes of

one of ordinary skill at the invention as a whole, *i.e.*, the compound, what it does, and/or what properties it has, etc., can the decision-maker appreciate its nonobvious features.

Petitioner's proposed "synergy test" violates this statutory mandate by looking exclusively to the functioning of the individual components of a combination after they have been combined. Petitioner's "synergy test" improperly assumes that it would have been obvious to take known components and combine them. *See Republic*, 592 F.2d at 971; Giles S. Rich, *Laying the Ghost of the "Invention" Requirement*, 1 AM. PAT. LAW ASS'N Q.J. 26, 34 (1972) (noting that "to invalidate [a "combination"] claim, it must be shown that the *combination* was obvious, not merely its components" (emphasis in original)). This unjustifiable assumption is essentially an improper "obvious to try" standard of obviousness. *See Medichem, S.A. v. Rolabo, S.L.*, 437 F.3d 1157, 1167 (Fed. Cir. 2006). In fact, the very choice of the components may be the essence of the invention. *See Republic*, 592 F.2d at 971 ("*[i]t is that act of selection which is the invention*" (emphasis in original)); *Adams*, 383 U.S. at 50 ("the issue is whether bringing [the components] together as taught by [the inventor] was obvious in the light of the prior art").

The determination of which elements to select and combine and in what proportions often leads to useful, novel, and nonobvious chemical compounds that find application in many different technological fields. The "synergy test" ignores what one of ordinary skill in the art would find nonobvious and precludes a determination of the nonobviousness of *making a combination*. As such, the "synergy test" "does not comport with the *Graham* mandate to apply section 103." *Republic*, 592 F.2d at 971.

B. The "Synergy Test" Previously Has Been Found To Be Unworkable

The "synergy test" previously has been rejected as unworkable by the lower courts. *See, e.g., Stratoflex, Inc. v. Aeroquip Corp.*, 713 F.2d 1530, 1540 (Fed. Cir. 1983); *Republic*, 592 F.2d at 971. Although Petitioner relies on two post-*Graham* decisions by this Court, to support its argument that "synergy" should be a requirement of patentability, Petitioner takes the "synergism" language in these decisions out of context. *See Anderson's-Black Rock, Inc. v. Pavement Salvage Co., Inc.*, 396 U.S. 57 (1969) and *Sakraida v. Ag Pro, Inc,* 425 U.S. 273 (1976). Neither *Anderson's-Black Rock* nor *Sakraida* instituted a mandatory "synergy" requirement. *See Anderson's-Black Rock*, 396 U.S. at 61 (stating that "[a] combination of elements *may* result in an effect greater than the sum of the several effects taken separately" (emphasis added)); *Sakraida*, 425 U.S. at 282. Petitioner changes the Court's "may" to a "must" and concludes that "synergy" is a condition of patentability. *See* Petitioner's Brief, pp. 4-5. This Court has not held "that a 'synergy' test supersedes a finding of nonobviousness under the *Graham* analysis. To the contrary, each case quoted *Graham* with approval." *Republic*, 592 F.2d at 969.

Like Petitioner, some courts misconstrued the Court's references to "synergy" and added a "synergy" element to the *Graham* analysis for so-called "combination" patents. However, those courts struggled in their attempts to formulate a workable definition of "synergy." *See* George M. Sirilla, Giles S. Rich, *35 U.S.C. § 103: From Hotchkiss to Hand to Rich, the Obvious Patent Law Hall-of-Famers*, 32 J. MARSHALL L. REV. 437, 543 (1999). Even before the

formation of the Federal Circuit, many courts had abandoned a "synergy" requirement.[5]

In laying the "synergy" requirement to rest, the Seventh Circuit Court of Appeals pointed out that the various formulations of "synergy" revealed that "synergism is only a figure of speech, for in its literal sense synergism never has existed and never can exist in mechanical or hydraulic inventions when the term is defined as a whole result greater than the sum of its constituent parts." *Republic*, 592 F.2d at 970. The PTO also recognized that the Supreme Court's references to "synergy" did not constitute a modification of the *Graham* analysis and issued a directive to that effect in 1976. *See* Official Gazette of the United States Patent and Trademark Office, Vol. 949, No. 1, p. 4; *see also* MPEP § 2141.

A few years later, the Federal Circuit followed suit, clarifying that "synergy" is nowhere to be found in the statute and that, although the presence of "synergy" may point toward nonobviousness, it is not a requirement of patentability. *Stratoflex*, 713 F.2d at 1540. The TSM test was implemented to assist with the obviousness determination. *See Ashland Oil, Inc. v. Delta-Resins & Refractories, Inc.*, 776 F.2d 281, 297 (Fed. Cir. 1985). Unlike the proposed "synergy" test, the Federal Circuit's treatment of obviousness is consistent with this Court's precedents and the patent statute. *See Alza Corp. v. Mylan Labs., Inc.*,

[5] "Congress conferred exclusive jurisdiction of all patent appeals on the Court of Appeals for the Federal Circuit, in order to 'provide nationwide uniformity in patent law.'" *Bonito Boats, Inc. v. Thunder Craft Boats, Inc.*, 489 U.S. 141, 162 (1989) (quoting H.R. Rep. No. 97-312, at 20 (1981)).

2006 WL 2556356, at *3 (Fed. Cir. Sept. 6, 2006); *Kahn*, 441 F.3d at 985.

III. A "SYNERGY" REQUIREMENT WOULD RENDER MANY GREAT INNOVATIONS UNPATENTABLE

Injecting a "synergy" requirement into the patent law would render many past inventions unpatentable. Pioneering inventions such as the telephone, electric lamp, and airplane would likely not have been entitled to a patent under Petitioner's proposed "synergy test."

In 1876, Alexander Graham Bell obtained a patent on the telephone. *See* U.S. Patent No. 174,465. Bell characterized his invention as a "combination . . . of a permanent magnet or other body capable of inductive action, with a closed circuit." *Id.* at claim 2. In describing his invention, Bell stated that the "combined effect of A and B . . . is expressed by the curve A + B." *Id.* at p. 2. "A," which referred to a permanent magnet, and "B," which referred to a closed circuit, were known elements functioning as expected. There was no "synergy" produced by the new telephone. However, this lack of synergy did not stop the Court from affirming the validity of the patent. *See Dolbear v. American Bell Tel. Co.*, 126 U.S. 1 (1888).

Thomas Edison obtained a patent on the electric lamp in 1880. *See* U.S. Patent No. 223,898. Like Bell, Edison characterized his invention as a "combination" – more specifically, a "combination of carbon filaments with a receiver . . . " *Id.* at claim 2. Nowhere in the patent did Edison describe his invention as "synergistic."

Orville and Wilbur Wright ("the Wright brothers") obtained a patent on the airplane in 1906. *See* U.S. Patent No. 821,393. Not surprisingly, the Wright brothers characterized their invention as a "combination" but made no mention of any "synergistic" result produced by the claimed combination.

In more recent times, Dr. Kary Mullis combined a known enzyme with known oligomeric starting materials, and through cycles of heating and cooling, greatly increased the amount of DNA produced. His innovation, the Polymerase Chain Reaction ("PCR"), revolutionized biology, medicine, genetics, and forensic science. Dr. Mullis received a Nobel Prize for this innovation and obtained U.S. and worldwide patents. Mullis took known elements and, relying on a known property of DNA (that it dissembles at high temperature), came up with a more efficient way to obtain large amounts of DNA. This combination may not be "synergistic" but, nonetheless, it advanced the useful arts tremendously.

If "synergy" were a requirement, would these innovations have been patented? Likely they would not have been. Indeed, in the mechanical arts, there is no such thing as a component that functions differently in combination than it does individually. *Republic*, 592 F.2d at 970.

> A spring or a valve will always function as a spring or valve, alone or in concert with other components[;] mechanical elements can do no more than contribute to the combination the mechanical functions of which they are inherently capable [and, therefore,] the overall performance of the combination is always equal to the sum of the functions of the individual components.

Id.

In the chemical arts, virtually all compounds are made from existing elements. While certain elements retain their chemical properties when combined with other elements, many elements change their biochemical or electrochemical properties when combined with other elements. Such changes may be characterized as "unexpected," but not necessarily "synergistic." Indeed, nearly all things are made from existing components. To effectively preclude patent protection for new combinations of existing components by imposing a "synergy" requirement on patent applicants would render unpatentable even the most revolutionary inventions. As Giles Rich, one of the authors of Section 103, remarked, "[t]he laws of physics and chemistry in accordance with which all inventions perform do not permit the judic[i]ally imagined magic accordingly to which 2+2=5. Where such a spurious test prevails all patents are invalid." Rich, *Laying the Ghost of the "Invention" Requirement,* 1 AM. PAT. LAW ASS'N Q.J. at 44.

Under Petitioner's proposed "synergy test," many innovations, recognized by *amici* and others as revolutionary, would be rendered obvious.[6] This is simply inconsistent with our Constitution's mandate for patent protection to promote the progress of the useful arts.

---

[6] To the extent Petitioners argue that this conclusion is illusory because secondary considerations would rebut this conclusion, *amici* disagree. Secondary considerations require objective evidence that may not develop until well after the patent application is filed. Many recognized secondary considerations (such as commercial success, copying by others, licensing, etc.) are limited by the ability of various industries to adopt the invention. For example, because regulatory approval must be obtained for medical innovations before they can be placed on the market, patent applicants may be unable to demonstrate commercial success during the pendency of their applications.

CONCLUSION

In sum, very few, if any, inventions deserving of patent protection would be considered patentable under Petitioner's proposed "synergy test." This untenable "test" includes within its reach only a subset of inventions that would be patentable under the *Graham* standard. Unlike the proposed "synergy test," the current obviousness standard articulated by this Court in *Graham*, and applied correctly by the Federal Circuit for decades, properly balances the rewards to inventors with the interests of the public and maintains the high level of innovation and thriving technology that drives this country.

For at least the foregoing reasons, this Court should affirm the judgment of the Court of Appeals for the Federal Circuit.

Respectfully submitted,

HENRY L. BRINKS
Counsel of Record
MEREDITH MARTIN ADDY
K. SHANNON MRKSICH, PH.D.
BRINKS HOFER GILSON & LIONE
NBC Tower – Suite 3600
455 North Cityfront Plaza Drive
Chicago, Illinois 60611
(312) 321-4200
Counsel for Amici Curiae

October 16, 2006

LIST OF *AMICI CURIAE*

Barbara Imperiali, Ph.D.
Professor of Chemistry and
Professor of Biology
Massachusetts Institute
of Technology

Rustem Ismagilov, Ph.D.
Professor of Chemistry
University of Chicago

Chad A. Mirkin, Ph.D.
Professor of Chemistry and
of Medicine at
Northwestern University

Milan Mrksich, Ph.D.
Professor of Chemistry
University of Chicago

Stephen Quake, Ph.D.
Professor of Bioengineering
Stanford University

David R. Walt, Ph.D.
Professor of Chemistry
Tufts University

5585

(19)

No. 04-1350

FILED
AUG 22 2006
OFFICE OF THE CLERK

IN THE

Supreme Court of the United States

KSR INTERNATIONAL CO.,
Petitioner,

v.

TELEFLEX INC. and TECHNOLOGY HOLDING CO.,
Respondents.

On Writ of Certiorari to the United States Court of Appeals for the Federal Circuit

BRIEF OF *AMICI CURIAE* CISCO SYSTEMS INC., GENERAL MOTORS CORPORATION, HALLMARK CARDS, INCORPORATED, FORTUNE BRANDS INC. AND ELECTROLUX NORTH AMERICA IN SUPPORT OF REVERSAL

WILLIAM R. STEIN
ERIC S. PARNES
HUGHES HUBBARD & REED LLP
1775 I Street, N.W.
Washington, DC 20006
(202) 721-4600

PETER A. SULLIVAN
Counsel of Record
HUGHES HUBBARD & REED LLP
One Battery Park Plaza
New York, New York 10004
(212) 837-6000

WILSON-EPES PRINTING CO., INC. – (202) 789-0096 – WASHINGTON, D. C. 20001

TABLE OF CONTENTS

	Page
TABLE OF AUTHORITIES	iii
INTEREST OF THE *AMICI CURIAE*	1
SUMMARY OF THE ARGUMENT	3
ARGUMENT	3
I. SATISFYING THE SUGGESTION TEST SHOULD NOT BE A REQUIREMENT FOR CHALLENGING PATENTABILITY UNDER SECTION 103	3
A. The Suggestion Test Cannot Be Reconciled With The Precedents Of This Court	4
B. The Suggestion Test Sets Too Low A Bar To Patentability	6
C. The Suggestion Test Improperly Transforms The Ultimate Question Of Obviousness Into A Question Of Fact	9
II. THIS COURT SHOULD REAFFIRM THE GRAHAM ANALYSIS AND REVERSE THE JUDGMENT OF THE COURT OF APPEALS	10
A. The Graham Analysis Provides Sufficient Guidance For Courts To Decide Patentability Under Section 103	10
B. The Graham Factors Provide A More Flexible Approach To Determining Patentability	12
1. Fast-Developing Technology And The Differences In The Prior Art	13
2. Art-Specific Principles And The Knowledge Of Ordinarily Skilled Artisans	15

TABLE OF CONTENTS—Continued

Page

3. Focus On The Problem To Be Solved... 15

C. The Judgment Of The Federal Circuit Should Be Reversed..... 17

CONCLUSION 17

TABLE OF AUTHORITIES

CASES	Page
Bonito Boats, Inc. v. Thunder Craft Boats, Inc., 489 U.S. 141 (1989)	5-6
Brown & Williamson Tobacco Corp. v. Philip Morris Inc., 229 F.3d 1120 (Fed. Cir. 2000)	8
Concrete Appliances Co. v. Gomery, 269 U.S. 177 (1925)	14
Dann v. Johnston, 425 U.S. 219 (1976)	5
In re Dembiczak, 175 F.3d 994 (Fed. Cir. 1999)	7
Dow Chemical Co. v. Halliburton Oil Well Cementing Co., 324 U.S. 320 (1945)	5
In re Gartside, 203 F.3d 1305 (Fed. Cir. 2000)	7
In re Gorman, 933 F.2d 982 (Fed. Cir. 1991)	7
Graham v. John Deere Co., 383 U.S. 1 (1966)	*passim*
Great Atlantic & Pacific Tea Co. v. Supermarket Equip. Corp., 340 U.S. 147 (1950)	11
Group One, Ltd. v. Hallmark Cards, Inc., 407 F.3d 1297 (Fed. Cir. 2005)	8, 10, 13
Group One, Ltd. v. Hallmark Cards, Inc., No. 97-1224-CV, 2004 WL 3528282 (W.D. Mo. Feb. 20, 2004)	8
Hotchkiss v. Greenwood, 52 U.S. 248 (1850)	11, 17
In re Kahn, 441 F.3d 977 (Fed. Cir. 2006)	4, 5
Karsten Mfg. Corp. v. Cleveland Golf Co., 242 F.3d 1376 (Fed. Cir. 2001)	9
Mandel Bros., Inc. v. Wallace, 335 U.S. 291 (1948)	5, 9
Omark Indus., Inc. v. Colonial Tool Co., 672 F.2d 362 (3d Cir. 1982)	9
Paramount Publix Corp. v. American Tri-Ergon Corp., 294 U.S. 464 (1935)	5, 14
Peters v. Hanson, 129 U.S. 541 (1889)	5, 11
Pro-Mold & Tool Co. v. Great Lakes Plastics, Inc., 75 F.3d 1568 (Fed. Cir. 1996)	8

TABLE OF AUTHORITIES—Continued

	Page
In re Rouffet, 149 F.3d 1350 (Fed. Cir. 1998)	4, 8
Sarkisian v. Winn-Proof Corp., 688 F.2d 647 (9th Cir. 1982)	9
In re Sernaker, 702 F.2d 989 (Fed. Cir. 1983)	4
In re Vaeck, 947 F.2d 488 (Fed. Cir. 1991)	7
Wallace v. Mandel Bros., Inc., 67 F. Supp. 814 (N.D. Ill. 1946)	9
Wallace v. Mandel Bros., Inc., 164 F.2d 861 (7th Cir. 1947)	9
Winner Int'l Royalty Corp. v. Wang, 202 F.3d 1340 (Fed. Cir. 2000)	7, 9
STATUTES	
35 U.S.C. § 102	7
35 U.S.C. § 103	*passim*
OTHER	
Thomas Kuhn, *The Structure of Scientific Revolutions* (3d ed. 1996)	13
Robert P. Merges, *Uncertainty and the Standard of Patentability*, 7 High Tech. L.J. 1 (1992)	16
United States Patent & Trademark Office, *Class Arranged By Art Unit*, http://www.uspto.gov/web/offices/opc/documents/caau.pdf	15
United States Patent & Trademark Office, *Manual Of Patent Examining Procedure* (8th ed. 2001)	15

IN THE

Supreme Court of the United States

No. 04-1350

KSR INTERNATIONAL CO.,
Petitioner,

v.

TELEFLEX INC. and TECHNOLOGY HOLDING CO.,
Respondents.

On Writ of Certiorari to the United States Court of Appeals for the Federal Circuit

BRIEF OF *AMICI CURIAE* CISCO SYSTEMS INC., GENERAL MOTORS CORPORATION, HALLMARK CARDS, INCORPORATED, FORTUNE BRANDS INC. AND ELECTROLUX NORTH AMERICA IN SUPPORT OF REVERSAL

INTEREST OF THE *AMICI CURIAE*

Amici Curiae Cisco Systems Inc., General Motors Corporation, Hallmark Cards, Incorporated, Fortune Brands Inc. and Electrolux North America respectfully submit this brief in support of Petitioner, KSR International Co., urging that this Court reverse the judgment of the United States Court of Appeals for the Federal Circuit because it applies a test for obviousness under Section 103(a) of the Patent Act, 35 U.S.C. § 103(a) (2000), that is inconsistent with Section 103(a) and this Court's precedent, and because this test provides too lax a standard for patentability.[1]

[1] The parties have consented to the filing of this brief. Pursuant to Rule 37.6, *amici* represent that this brief was not authored in part or in whole by counsel for any party, and that no person or entity other than *amici* has made a monetary contribution to the preparation or submission of this brief.

Amici are large companies that rely on the patent system to protect their innovations. Cisco Systems is a company of over 38,000 employees worldwide that designs and sells network equipment that helped create the Internet as it exists today. General Motors is a company of 327,000 people worldwide and is the world's largest automaker. It manufactures and sells cars and trucks in 33 countries under the following brands: Buick, Cadillac, Chevrolet, GMC, GM Daewoo, Holden, Hummer, Opel, Pontiac, Saab, Saturn and Vauxhall. The adjustable pedal assembly at issue in this case was supplied to GM for use on certain of its light trucks. Hallmark is known worldwide for its greeting cards, and it also produces a wide range of gifts, keepsakes, books and decorative products. Fortune Brands is a leading consumer products company whose subsidiaries engage in the manufacture, production and sale of home and hardware products, golf products, and wine and spirits. Its brands include Titleist, Moen, KitchenCraft, and Master Lock. Electrolux North America is part of Electrolux Group, a company of over 57,000 employees worldwide that is a global leader in home appliances and appliances for professional use, selling under the Electrolux, AEG-Electrolux, Eureka and Frigidaire brands.

In addition to relying on the patent system to protect their innovations, *amici* also contend with the costs of a patent system that issues incremental patents that only provide routine variations to the state of the art. For example, the *amici* have found that the proliferation of large numbers of obvious patents has increased greatly the potential for inadvertent infringement. Some *amici* have found that the lack of access to prior art in the software area makes it exceedingly difficult to invalidate a software patent under the Federal Circuit's suggestion test. Some have been confronted with claims of patent infringement on purported inventions involving technologically trivial subject matter, where the

patent was made possible because of the low bar to patentability resulting from the suggestion test.

Amici believe that the Federal Circuit's current interpretation of Section 103(a) hurts innovation. The suggestion test allows patents to be issued for insignificant extensions of existing technology. *Amici* respectfully urge this Court to reestablish the balance in the patent laws and reassert the *Graham* test—without a suggestion requirement—as the appropriate test for patentability under Section 103.

SUMMARY OF THE ARGUMENT

The Federal Circuit's suggestion test is an incorrect statement of the law as established by this Court in *Graham*. The suggestion test has preempted many of the legal principles developed by this Court over more than 150 years of jurisprudence, and has replaced it with an inferior test of patentability. The test diverges from the teachings of this Court because it establishes too low a bar to patentability and because it invades the province of the trial court in deciding validity under Section 103, a question of law.

The Court should reverse the judgment of the Court of Appeals on the basis of the *Graham* test. The *Graham* test gives sufficient protection against hindsight reconstruction and is faithful to the letter of Section 103 and the spirit of the Supreme Court cases that were codified by Section 103.

ARGUMENT

I. SATISFYING THE SUGGESTION TEST SHOULD NOT BE A REQUIREMENT FOR CHALLENGING PATENTABILITY UNDER SECTION 103.

This Court in *Graham* established the framework for deciding patentability under Section 103 of the Patent Act of 1952. The Court in *Graham* laid out three factual inquiries:

"the scope and content of the prior art are to be determined; differences between the prior art and the claims at issue are to be ascertained; and the level of ordinary skill in the pertinent art resolved." *Graham v. John Deere Co.*, 383 U.S. 1, 17 (1966). It also identified several "secondary considerations" that "may have relevancy" in making the obviousness determination. *Id.* at 17-18.

Under the current form of the suggestion test, in addition to determining the *Graham* factors, a trier of fact must determine "whether there is something in the prior art as a whole to suggest the desirability, and thus the obviousness, of making the combination." *In re Rouffet*, 149 F.3d 1350, 1356 (Fed. Cir. 1998) (internal quotations and citations omitted). To satisfy the test, there must be some proven "teaching, suggestion, or motivation" that would have led a person of ordinary skill in the art to combine the relevant prior art teachings in the manner claimed in a patent. *Id.*

A. The Suggestion Test Cannot Be Reconciled With The Precedents Of This Court.

The suggestion test is not a part of this Court's jurisprudence. It evolved as a separate doctrine in the jurisprudence of one of the predecessor courts of the Federal Circuit Court of Appeals, the Court of Customs and Patent Appeals, and the Federal Circuit adopted the test early in its history. *See In re Sernaker*, 702 F.2d 989, 994-96 (Fed. Cir. 1983). From that point forward, the Federal Circuit cited the suggestion test by reference to its own precedent, and not to any precedent of this Court. In this case, the court cited the suggestion test in this way. (*See* Pet. App. A at 6a.)

Recently, a panel of the Federal Circuit has tacitly acknowledged the suggestion test's independent provenance. In *In re Kahn*, 441 F.3d 977 (Fed. Cir. 2006), the court noted that its "predecessor court was the first to articulate the motivation-suggestion-teaching test." *Id.* at 986.

Nevertheless, the *Kahn* court claimed that the suggestion test is an extension of the "analogous art" test, which has roots in the first *Graham* factor (determining the relevant prior art). *Id.* at 987-88. But no such connection between these two tests exists. The analogous art test is subsumed in the first *Graham* factor. The suggestion test is a completely separate, additional requirement. Under *Graham*, the presence of analogous art that is pertinent to the problem to be solved is alone evidence of obviousness. To prove obviousness under the Federal Circuit's analysis, one needs to show not only the presence of analogous art, but also that there was a motivation, suggestion or teaching in the prior art to combine the references of that analogous prior art to arrive at the claimed invention.

The flaw in the *Kahn* court's reasoning is fully realized when one considers that the *Graham* case would have been decided differently had the Court applied the suggestion test. None of the prior art discussed in *Graham* suggested inverting the plow shank and hinge plate in the manner chosen by the patentee. Nevertheless, this Court found this to be a simple design change, well within the skill of a person of ordinary skill in the art, and hence obvious.[2] 383 U.S. at 25-26.

When the scales of patentability tip too far towards granting incremental patents, they overstep the limited congressional grant in the Constitution. In *Bonito Boats, Inc. v. Thunder Craft Boats, Inc.*, 489 U.S. 141, 146 (1989), this Court noted that "[t]he Patent Clause itself reflects a balance

---

[2] In addition to *Graham* itself, *Dann v. Johnston*, 425 U.S. 219 (1976), *Mandel Bros., Inc. v. Wallace*, 335 U.S. 291 (1948), *Dow Chemical Co. v. Halliburton Oil Well Cementing Co.*, 324 U.S. 320 (1945), *Paramount Publix Corp. v. American Tri-Ergon Corp.*, 294 U.S. 464 (1935), and *Peters v. Hanson*, 129 U.S. 541 (1889), all likely would have gone the other way if a suggestion test were employed. (*See* Brief of *Amicus Curiae* Cisco Systems, *et al.* in support of the petition for certiorari, at 10-13.)

between the need to encourage innovation and the avoidance of monopolies which stifle competition without any concomitant advance in the 'Progress of Science and useful Arts.'" The Court in *Graham* noted the need to protect this balance:

> The Congress in the exercise of the patent power may not overreach the restraints imposed by the stated constitutional purpose. Nor may it enlarge the patent monopoly without regard to the innovation, advancement or social benefit gained thereby. Moreover, Congress may not authorize the issuance of patents whose effects are to remove existent knowledge from the public domain, or to restrict free access to materials already available. Innovation, advancement, and things which add to the sum of useful knowledge are inherent requisites in a patent system which by constitutional command must 'promote the Progress of *** useful Arts.' This is the standard expressed in the Constitution and it may not be ignored.

383 U.S. at 5-6. The suggestion test as applied can overreach the restraints imposed by the constitutional grant. The test does not focus on whether existent knowledge is removed from the public domain. The *Graham* framework—with its focus on the state of the prior art, the knowledge of the ordinarily skilled artisan, the differences between the claimed invention and the prior art, and secondary factors (in close cases)—hones in directly on the principles to be protected in the constitutional grant.

B. The Suggestion Test Sets Too Low A Bar To Patentability.

The suggestion test requires that the prior art itself offer some reason for making the jump from the prior art to the claimed invention. As the Federal Circuit has described the requirement, the prior art must indicate the desirability of making the jump and a reasonable expectation that the jump

will be successful. *See, e.g., In re Vaeck*, 947 F.2d 488, 493 (Fed. Cir. 1991). This inquiry typically unfolds in litigation as a process of linking prior art documents—patents, research articles, trade show brochures—to show that there was a suggestion, teaching or motivation somewhere in those documents to combine the documents in such a way as to arrive at the claimed invention.[3]

This process is a long way removed from the inquiry embodied in Section 103. The statute focuses on the differences between the claimed invention and the prior art, but emphasizes that it is the state of knowledge of the ordinarily skilled artisan that must provide the context for the answer of whether "the subject matter as a whole would have been obvious at the time the invention was made . . . ." 35 U.S.C. § 103(a) (2000). The Federal Circuit has instead emphasized the prior art over the knowledge of one of ordinary skill in the art, essentially defining the suggestion test in terms of the prior art—whether there was some teaching, suggestion or motivation in the prior art references themselves.

For example, in *In re Gorman*, 933 F.2d 982, 987 (Fed. Cir. 1991), the court stated that "[t]he references themselves must provide some teaching whereby the applicant's combination would have been obvious." The suggestion test, with its emphasis on "clear," "particular" or "plain" evidence, and "rigorous" application, *e.g., Winner Int'l Royalty Corp. v. Wang*, 202 F.3d 1340, 1349 (Fed. Cir. 2000); *In re Dembiczak*, 175 F.3d 994, 999 (Fed. Cir. 1999), *abrogated on other grounds by In re Gartside*, 203 F.3d 1305 (Fed. Cir. 2000), requires a showing that the prior art suggests the combination,

---

[3] Prior art includes patents and printed publications. *See* 35 U.S.C. § 102 (2000). The critical date for establishing when art is "prior art" varies for the subsections of the statute. For example, it could be the date of invention, *see* § 102(a), or one year before the filing of a U.S. application, *see* § 102(b).

rather than a showing that the ordinarily skilled artisan's knowledge suggests it.

To be sure, several Federal Circuit cases speak of the suggestion coming from the knowledge of one of ordinary skill in the art or from the nature of the problem to be solved. *See, e.g., Pro-Mold & Tool Co. v. Great Lakes Plastics, Inc.*, 75 F.3d 1568 (Fed. Cir. 1996). These cases, however, are the exception, and they offer an illusory standard. The *Group One* case is a good example of this illusory standard. In defending the trial court's decision to set aside the jury verdict on obviousness, Hallmark argued on appeal that the jury had no reasonable basis upon which to support its determination because Hallmark provided unrebutted evidence that the problem to be solved would suggest solving it with the claimed invention. *Group One, Ltd. v. Hallmark Cards, Inc.*, 407 F.3d 1297, 1304-05 (Fed. Cir. 2005). Group One did not attempt to refute the problem-to-be-solved evidence, and only argued in response that the prior art patents did not offer the required suggestion to combine. *Id.* at 1305. The court acknowledged that Group One did not address the problem-to-be-solved evidence "in so many words," *id.*, but it still reversed the trial court's that the Group One invention was "indubitably obvious," *Group One, Ltd. v. Hallmark Cards, Inc.* No. 97-1224-CV, 2004 WL 3528282, at *16 (W.D. Mo. Feb. 20, 2004).

In practice, the Federal Circuit requires "clear" or "particular" proof from the prior art references to overcome the presumption of validity. *See Brown & Williamson Tobacco Corp. v. Philip Morris Inc.*, 229 F.3d 1120, 1125 (Fed. Cir. 2000). Otherwise, the determination is at risk for being deemed an improper "hindsight" reconstruction—an analysis that uses the patent itself as a starting point for combining the prior art references. *See, e.g., In re Rouffet*, 149 F.3d 1350, 1355-58 (Fed. Cir. 1998). This case and the *Group One* case are just two examples of how the suggestion test sets too low a bar to patentability.

C. The Suggestion Test Improperly Transforms The Ultimate Question Of Obviousness Into A Question Of Fact.

The suggestion test also undermines the holding of *Graham* that "the ultimate question of patent validity is one of law." 383 U.S. at 17. Prior to the creation of the Federal Circuit, courts, not juries, routinely determined obviousness. *See, e.g., Wallace v. Mandel Bros., Inc.*, 67 F. Supp. 814 (N.D. Ill. 1946) (determining obviousness), *rev'd*, 164 F.2d 861 (7th Cir. 1947), *rev'd, Mandel Bros., Inc. v. Wallace*, 335 U.S. 291 (1948); *Omark Indus., Inc. v. Colonial Tool Co.*, 672 F.2d 362 (3d Cir. 1982) (affirming district court's determination of obviousness after bench trial); *Sarkisian v. Winn-Proof Corp.*, 688 F.2d 647, 650 (9th Cir. 1982) (although factual findings may be made by a jury, "the court must determine obviousness as a matter of law").

The *Graham* court noted three primary factors that should be decided by the finder of fact as a predicate to determining obviousness. Armed with the fact-finder's determination of the factors, the court then must analyze the findings and determine whether the claimed invention was obvious to one of ordinary skill in the art. Thus, under *Graham*, there was a separate analytical step reserved for the court.

The obviousness analysis under the suggestion test does not operate like the analysis under *Graham*. The presence or absence of a suggestion to combine prior art references is treated as a question of fact, just like the other *Graham* factors. *See, e.g., Winner Int'l Royalty Corp.*, 202 F.3d at 1348. And the Federal Circuit equates the answer to the suggestion test with the answer to the ultimate question of patentability under Section 103(a), preempting the separate analytical step that *Graham* reserved for the court. *See id.* at 1349; *see also, e.g., Karsten Mfg. Corp. v. Cleveland Golf Co.*, 242 F.3d 1376, 1385 (Fed. Cir. 2001). By denominating the suggestion test as a separate finding of fact, the Federal

Circuit has effectively given the entire obviousness analysis to the fact finder. In doing so, it transformed a question of law into a question of fact.

The present case illustrates this point. Although no genuine issue of material fact existed as to the basic *Graham* factors, the Federal Circuit vacated and remanded the district court's grant of summary judgment on invalidity, holding that the question could not be determined as a matter of law, but was a factual question governed by the suggestion test. (Pet. App. A at 8a.) In the *Group One* case, the Federal Circuit reviewed the district court's decision to set aside the jury verdict, which was a general verdict of nonobviousness. 407 F.3d at 1303. Under the Federal Circuit's jurisprudence, one can give the jury a general verdict of obviousness because there is nothing left for the court to decide.

Transferring obviousness determinations from courts to juries diminishes the role of the Federal Circuit as a specialized patent court. To the extent that ultimate questions of obviousness are treated as factual questions and decided by juries, litigants are largely and often wholly deprived of access to summary adjudication and to meaningful post-trial or appellate review.

II. THIS COURT SHOULD REAFFIRM THE GRAHAM ANALYSIS AND REVERSE THE JUDGMENT OF THE COURT OF APPEALS.

A. The Graham Analysis Provides Sufficient Guidance For Courts To Decide Patentability Under Section 103.

There is no need to add the suggestion test to this Court's *Graham* framework. This Court's precedents have provided ample guidance and have established well-understood principles for determining obviousness.

Starting with the case of *Hotchkiss v. Greenwood*, 52 U.S. 248 (1850), this Court has laid out a comprehensive framework for establishing the patentability of an invention utilizing the concept of obviousness. Several principles of law have developed:

- The mere substitution of one material in place of another is not patentable where there is no change in the manner of working the material, no improvement in the material used to produce the result and no new result obtained. *Hotchkiss*, 52 U.S. at 266;
- An application of an old device to a new use is not patentable. *Hotchkiss*, 52 U.S. at 266; *Peters v. Hanson*, 129 U.S. 541, 557 (1889);
- Courts should determine the obviousness of combination patents "with a care proportioned to the difficulty and improbability of finding invention in an assembly of old items." *Great Atl. & Pac. Tea Co. v. Supermarket Equip. Corp.*, 340 U.S. 147, 152 (1950).

The Patent Act of 1952 codified the approach to patentability developed since *Hotchkiss*. *Graham* was the first Section 103 case to come before this Court after the enactment of the 1952 Patent Act. This Court clarified that the Patent Act was not meant to lower the bar to patentability or to replace the precedents of this Court, save perhaps to the extent any of those precedents could be read to require a "flash of genius." *See Graham*, 383 U.S. at 16 & n.8. Finally, this Court noted, "[w]e believe that strict observance of the requirements laid down here will result in that uniformity and definiteness which Congress called for in the 1952 Act." *Id.* at 18.

Graham continues to provide an appropriate framework for the analysis when it is strictly observed. The fact finder can identify the scope and content of prior art, defining scope by whether the art is in a field analogous to the claimed invention or reasonably related to the problem to be solved.

The fact finder can ascertain the differences that were found between the prior knowledge in the field and the claimed invention. The fact finder can then identify the level of ordinary skill in the art—those who do the work in this field, how educated and experienced they are, what kind of solutions to problems they have at their disposal. And the fact finder can consider any secondary considerations. Armed with this information, the court can weigh the findings and decide the ultimate legal conclusion of obviousness using the principles of law that have been developed, and other principles that will develop over time.

Using the *Graham* analysis, one could demonstrate the knowledge of one of ordinary skill in the art by showing solutions to similar problems in the field. Expert witnesses in the art can opine on what ordinarily skilled artisans understand about the art, with reasoning and examples sufficient to support their views. With this context and understanding of the prior art and the claimed invention, a court could easily go to the heart of the matter and decide obviousness. There is no reason to depart from this framework and add a suggestion test as a separate requirement of patentability.

B. The Graham Factors Provide A More Flexible Approach To Determining Patentability.

This Court in *Graham* envisaged "case-by-case development" of the law of obviousness. 383 U.S. at 18. This should result in a more flexible approach to proving or disproving obviousness than is the case using the suggestion test. Case-by-case development utilizing the *Graham* framework should improve the decision-making in three important respects: accounting for fast-developing technology and consumer trends; developing art-specific guidance; and focusing on the problem to be solved in the claimed invention.

1. *Fast-Developing Technology And The Differences In The Prior Art*

Rapid rises in the state of the art present difficulties in judging the obviousness of patents. The rapid release of new understanding coming from dramatic changes in the state of the art affects the manner in which innovators approach solving problems. In *The Structure of Scientific Revolutions*, Thomas Kuhn described the creation of a new scientific "paradigm" that changes the course of "normal science." Thomas Kuhn, *The Structure of Scientific Revolutions* 165-66 (3d ed. 1996). One example is Einstein's relativity as a paradigm shift from classical Newtonian mechanics. This paradigm shift focuses the creative energies of those working in the field away from the old paradigm and towards incorporating and applying the new paradigm into the scientific world-view. One aspect of this incorporation work is solving known problems using the new paradigm. Some of this applied work may itself be ground breaking, but other aspects may be readily understood based on the clear implications of the paradigm shift.

As with scientific paradigm shifts, there are technology paradigm shifts that take place from time to time. The shift will give rise to a flurry of activity to apply the newly understood technology to solve old problems. One striking example of such paradigm shifts can be seen in the rapid, wide-scale adoption of the Internet as a commercial and information exchange. Consumer tastes can also lead to changes in innovative focus. In the *Group One* case, Hallmark argued that no one paid any attention to the 50-year-old ribbon curling machine prior art until Hallmark conceived of a new ribbon product and required a machine to produce it. The germ of innovation was the marketing concept of a pre-packaged bow; the machine to create it was nothing more than a routine application of well-known engineering principles.

This Court recognized the impact of what would later be described as paradigm shifting in *Paramount Publix Corp. v. American Tri-Ergon Corp.*, 294 U.S. 464 (1935). In that case, the patent claimed a method for producing movies with sound by combining three prior art processes. There was no evidence cited in *Paramount Publix* that there was a teaching, suggestion, or motivation in the prior art to combine these processes in the manner claimed. This Court nevertheless invalidated the patent, finding that the advance in the patent was "ready at hand" and merely "awaited the public acceptance of the sound motion picture . . . ." *Id.* at 476. The paradigm shift was the public's acceptance of sound motion pictures. Once accepted, it was a trivial matter to use the three prior art processes in combination.

In *Concrete Appliances Co. v. Gomery*, 269 U.S. 177 (1925), this Court noted a paradigm shift in the field of concrete handling. The claimed invention was made in the wake of a shift in construction practice from using dry mix concrete in building construction to using wet mix concrete. The claimed invention was an adaptation of a gravity feed fluid conveyor system—a system similar to those that had been used for centuries for supplying water, and more recently for supplying coal and grain—to supply wet concrete in building construction. This Court held that the claimed invention did not rise above ordinary mechanical skill:

> The observations of common experience in the mechanical arts would lead one to expect that, once the feasibility of using "wet" concrete in building operations was established, the mechanical skill of those familiar with engineering and building problems would seek to make use of known methods and appliances for the convenient handling of this new building material.

269 U.S. at 184.

One needs to take into account any shift in the state of the art in reviewing the patentability of an invention under

Section 103. The decision-maker, be it the patent examiner in the case of the patent application or the court in deciding validity in an infringement litigation, must bring to the examination an appreciation of any quantum change in the level of skill in the art, change that often is not reflected in the paper record or published patent applications and technical references.

2. *Art-Specific Principles And The Knowledge Of Ordinarily Skilled Artisans*

The PTO reviews claims in many areas, including mechanics, electronics, pharmaceuticals, optics, biotechnology, nanotechnology, chemistry, and computer sciences. *See generally* United States Patent & Trademark Office, *Class Arranged By Art Unit*, http://www.uspto.gov/web/offices/opc/documents/caau.pdf (listing classes of claims). Each of these areas has developed a knowledge base that is unique to it, but also one that admits to certain principles and trends within the area. *Cf.* United States Patent & Trademark Office, *Manual Of Patent Examining Procedure* § 903.08(e) (8th ed. 2001). A framework that incorporates these principles and trends could provide more certainty and would be of tremendous benefit to patent applicants and litigants.

The suggestion test does not allow for such art-specific rule making. Since the analysis is highly fact-specific—how does prior art reference A fit with prior art reference B—it provides fewer opportunities for developing art-specific rules of general applicability in the area. The *Graham* framework would allow for art-specific rules to develop and thereby add more predictability to those determinations.

3. *Focus On The Problem To Be Solved*

Perhaps the *Graham* framework's greatest virtue is that it will require the PTO and the courts to re-center the focus on the crux of patentability—the problem to be solved. The

problem to be solved often guides our instinct as to the value of an invention. For example, those inventions that follow from the ingenuity of discovering a new want or need are most viscerally impressive. The maximum amount of risk-taking—investing precious time or resources chasing down potential dead-end research programs—is required of an inventor who foresees a problem to be solved that the public has not yet expressed. Success is quite speculative in such a case, but the social benefit of taking that risk and producing a useful result from it is high. *See* Robert P. Merges, *Uncertainty and the Standard of Patentability*, 7 High Tech. L.J. 1, 3-4 (1992) (arguing for commercial uncertainty as a standard for developing rules for patentability).

In a second group are those inventions that solve a known problem that had not been solved before. The quest to solve a problem that has vexed others is also a risky endeavor and is worthy of reward when solved.

In a third group are those inventions that solve a well-known problem but by other means. In this group, the least amount of risk is required. In some cases, real innovation is required to find a new solution to an old problem, but other times the solution is nothing more than the product of connecting the dots in the prior art. In this group, most of the dubious patents complained of by *amici* can be found.

These different groups require three different kinds of scrutiny. By discovering the want and inventing the solution, it is difficult to imagine an attack to validity that does not suffer from hindsight reconstruction. On the other hand, a solution to a problem that has already been solved by other means is more deserving of scrutiny. One could imagine, for example, that others in the art were satisfied with the known solutions and saw no need for even routine experimentation. The flexible *Graham* framework can grapple with these different groups of inventions, and the Federal Circuit and district courts can develop rules and principles to contend

with it, at a deeper level than has been accomplished through the suggestion test.

C. The Judgment Of The Federal Circuit Should Be Reversed.

The Federal Circuit's decision should be reversed. The prior art *Asano* patent discloses an adjustable pedal mechanism as is claimed in Claim 4 of the '565 Patent. One of ordinary skill in the art could apply *Asano* to a prior art electronic pedal position sensor and reasonably expect it to succeed. It was well understood by those of ordinary skill in the art that solutions like adjustable pedals that were adapted to mechanical accelerator pedals could be adapted to electric accelerators once electric accelerators became prevalent. Once a new form of accelerator mechanism became prevalent, it was a matter of routine skill to apply the improvements already existing in the prior mechanism to the new mechanism. All this amounts to is adapting an old mechanism to a new use, which would be obvious, and hence unpatentable, under the principles set forth in *Graham* and *Hotchkiss*.

CONCLUSION

For the foregoing reasons, the judgment of the Court of Appeals should be reversed.

Respectfully submitted,

WILLIAM R. STEIN
ERIC S. PARNES
HUGHES HUBBARD & REED LLP
1775 I Street, N.W.
Washington, DC 20006
(202) 721-4600

PETER A. SULLIVAN
Counsel of Record
HUGHES HUBBARD & REED LLP
One Battery Park Plaza
New York, New York 10004
(212) 837-6000

701
MOTION FILED
AUG 2 - 2006

No. 04-1350

In the Supreme Court of the United States

KSR INTERNATIONAL CO.,
Petitioner,

v.

TELEFLEX INC. and
TECHNOLOGY HOLDING CO.,
Respondents.

On Writ of Certiorari to the United States Court of Appeals for the Federal Circuit

MOTION FOR LEAVE TO FILE *AMICI BRIEF* and BRIEF OF JOSEPH V. COLAIANNI, SR. and JAMES E. ARMSTRONG, III, AS *AMICI CURIAE* IN SUPPORT OF PETITIONER

JOSEPH V. COLAIANNI, SR.*
PARTNER
PATTON BOGGS, LLP
2550 M STREET, NW
WASHINGTON, DC 20037
(202) 457-6174

JAMES E. ARMSTRONG, III
PARTNER
ARMSTRONG, KRATZ, QUINTOS,
HANSON & BROOKS, LLP
1725 K STREET, NW
SUITE 1000
WASHINGTON, DC 20006
(202) 659-2930

**Counsel of Record for Amici Curiae*

Becker Gallagher Legal Publishing, Inc. 800.890.5001

MOTION FOR LEAVE TO FILE AMICUS BRIEF

Pursuant to Rule 37.3(b) of the Rules of the Supreme Court of the United States, Joseph V. Colaianni, Sr., and James E. Armstrong, III, hereby respectfully request leave to file the accompanying *amici curiae* brief. This brief is submitted in support of the *Petitioner's Brief*. Petitioner KSR International Co. has consented to the filing of this brief. Respondents Teleflex Inc. and Technology Holding Co. have not consented to the filing of this brief.

The movants' strong interest in the proper interpretation and application of intellectual property law in this case stem from their current practice in intellectual property law at two international law firms with offices in the United States, Japan, and Qatar. In addition, Mr. Colaianni's interest derives from his experience as a judge at the United States Court of Federal Claims between 1970 and 1984. Mr. Armstrong's interest in the obviousness standard of Section 103 of the Patent Act, 35 U.S.C. §103, results from forty-eight years of practice in patent law.

The movants are greatly concerned that the incorrect emphasis the current Federal Circuit places on motivation as taught by printed references to combine prior art misses the ultimate issue of proper obviousness analysis under Section 103 of the Patent Act, 35 U.S.C. §103, namely giving full recognition to the level of skill of the person having ordinary skill as a vital part of the relevant art. The teaching, suggestion, or motivation test as applied by the current Federal Circuit in its interpretation of the obviousness standard strays from the Constitutional intent and this Court's prior pronouncement to secure for the public domain inventions that should be unpatentable because of

obviousness. Accordingly, the movants respectfully request leave to file the accompanying *amici curiae* brief.

Respectfully submitted,

Joseph V. Colaianni, Sr.
Counsel of Record

TABLE OF CONTENTS

Page

TABLE OF CONTENTS iii

TABLE OF AUTHORITIES iv

INTEREST OF AMICUS CURIAE 1

REASONS FOR GRANTING THE WRIT 2

I. The Federal Circuit Erred in Deviating From the Statutory Standard of 35 U.S.C. §103 and From This Court's Controlling Precedent, *Graham v. John Deere*, in Solely Applying the Teaching, Suggestion, or Motivation Test to the Question of Obviousness 2

II. The Federal Circuit Erred in Deviating From Its Own Earlier Line of Precedent Beginning With *Kimberly-Clark Corp. v. Johnson and Johnson Co.* and *EWP v. Reliance* in Solely Applying the Teaching, Suggestion, or Motivation Test to the Questions of Obviousness 8

III. The Supreme Court Should Review *KSR* and Direct the Federal Circuit to Return to the Obviousness Standard of *Graham v. John Deere* and the Federal Circuit's Earlier Line of Precedent 14

CONCLUSION 19

TABLE OF AUTHORITIES

CASES: Page

EWP Corp. v. Reliance Universal Inc.,
755 F.2d 898 (Fed. Cir. 1985) . . . . . *passim*

Gillette Co. v. S.C. Johnson & Son Inc.,
919 F.2d 720 (Fed. Cir. 1990) 18, 19

Graham v. John Deere Co.,
383 U.S. 1 (1966) . . . . . *passim*

Hotchkiss v. Greenwood,
52 U.S. 248 (1850) 3, 4, 9, 10, 16, 17

In re Hans Oetiker,
977 F.2d 1443 (Fed. Cir. 1992) 13, 18

Kimberly-Clark Corp. v. Johnson and Johnson Co.,
745 F.2d 1437 (Fed. Cir. 1984) . . . . . *passim*

Lamb-Weston v. McCain Foods,
73 F. 3d 546 (Fed Cir. 1996) 13

Teleflex Inc., v. KSR,
119 Fed. Appx. 282 (Fed. Cir. 2005)
(unpublished) 14, 15, 16, 17

CONSTITUTION AND STATUTES:

U.S. Const, art. I, §8, cl. 8 2

35 U.S.C. 103 3

INTEREST OF THE *AMICI CURIAE*

Amici Curiae Joseph V. Colaianni, Sr., and James E. Armstrong, III, respectfully submit this brief in support of petitioner, KSR International Co., encouraging reversal of the judgment of the United States Court of Appeals for the Federal Circuit, because that judgment results from an incorrect application of an obviousness test that is inconsistent with this Court's precedent as well as a line of Federal Circuit precedent and the Constitutional intent behind patent protection.[1]

Amici are lawyers who practice intellectual property law at two international law firms with offices in the United States, Japan, and Qatar, and have an interest in the proper interpretation and application of intellectual property law. In particular, Mr. Colaianni decided numerous patent claims as a judge for the United States Court of Federal Claims between 1970 and 1984. While on the court, Mr. Colaianni interpreted Section 103 of the Patent Act, 35 U.S.C. §103, to distinguish between nonobvious inventions deserving patent protection and obvious inventions to be left in the public domain. Mr. Armstrong has been registered before the United States Patent and Trademark Office to practice patent law since 1957. In his forty-eight years of practice, which began just five years after the inclusion in the Patent Act of 1952 of the obviousness standard as a condition for patentability, Mr. Armstrong encountered the issue of obviousness during patent prosecution, validity opinions, and litigation. *Amici* believe that the patent law ought to be

---

[1] Pursuant to this Court's Rule 37.6, *amici* represent that this brief was not authored in whole or in part by counsel for any party, and that no person or entity other than *amici* has made a monetary contribution to the preparation and submission of this brief. The names of the firms are provided for identification purposes only.

interpreted in strict adherence to the Constitutional intent of bestowing patent protection only to inventions that are nonobvious as required by Title 35 U.S.C. §103 and this Court's standard for obviousness. Specifically, *amici* believe that a correct obviousness analysis turns on the level of skill of a person having ordinary skill in the art, and the relevant art. In contrast, the current Federal Circuit places incorrect emphasis for the determination of obviousness on the motivation to combine prior art references. Continued application of this erroneous obviousness standard with an undue emphasis on the motivation to combine as applied in this case stifles innovation by providing patent protection for obvious inventions.

This case provides the Court with the opportunity to affirm this Court's own precedent which established the obviousness standard, and affirm Federal Circuit decisions consistent with this Court's precedent. The Court's intervention will prevent the current Federal Circuit's from interpreting the nonobviousness requirement contrary to long established standards.

ARGUMENT

I. The Federal Circuit Erred in Deviating From the Statutory Standard of 35 U.S.C. §103 and From This Court's Controlling Precedent, *Graham v. John Deere*, in Solely Applying the Teaching, Suggestion, or Motivation Test to the Question of Obviousness

The statutory basis of patent and copyright protection is Article I, §8, clause 8 of the Constitution that provides in pertinent part:

> Congress shall have power... To promote the Progress of Science and useful Arts, by securing for limited Times to Authors and inventors the exclusive Right to their respective Writings and Discoveries.

In 1790 Congress implemented the Constitutional mandate by passing legislation, 1 Stat.110, that permitted the granting of a patent for a period not to exceed 14 years for an invention that was useful and new. The new and useful statutory requirements for patentability remained virtually unchanged for some one hundred and fifty years.

However, while Congress was always concerned with rewarding an inventor for a new and useful invention, in fact it was equally concerned with the persisting fear of granting patents on inventions which were in the public domain and thus in effect to prevent citizens from freely using information and inventions to which they had a right. Indeed the patent system was to be used to "Promote the Progress of Science and the useful Arts," not to impede.

Thus while it was statutorily required that a patent be "new and useful," in fact at least since *Hotchkiss v. Greenwood*, 52 U.S. 248, 265 (1850), this Court's precedent has required for patentability that an invention manifest more ingenuity and skill than that possessed by a skilled mechanic.

With the passage of Title 35 U.S.C. §103 (1952) of the Patent Act of 1952, Congress expressly added the requirement that a patentable invention be "non-obvious" in addition to the previous requirements of utility as required by 35 U.S.C. §101 and novelty as required by 35 U.S.C. §102. The Supreme Court officially interpreted Section 103 for the first time in *Graham v. John Deere Co.*, 383 U.S. 1 (1966). That this Court fully recognized the impact of Section 103 is shown from the following:

> It is undisputed that this section uses, for the first time, a statutory expression of an additional

> requirement for patentability [non-obviousness], originally expressed in *Hotchkiss*.

Id. at 15.

The *Hotchkiss* case involved a patent that provided for the substitution of porcelain or potters clay for the metal portion of a doorknob. On appeal to this Court was a jury instruction which provided that the patent in suit was void if no other ingenuity or skill was necessary to construct the doorknob in a conventional manner with a different and cheaper material than that of an ordinary mechanic acquainted with the business. *Id.* This Court affirmed the jury instruction and held that if "no more ingenuity and skill [were] required ...than were possessed by an ordinary mechanic acquainted with the business, there was an absence of that degree of skill and ingenuity to make the invention patentable. *Id.* In other words, the improvement was the work of a skillful mechanic, not that of an inventor. In *Graham*, this Court also found that 35 U.S.C. 103 "was not intended by Congress to change the general level of patentable invention." *Graham*, 383 U.S. at 17. In specific the Court found that 35 U.S.C. 103 was "intended merely as a codification of judicial precedents embracing the *Hotchkiss* condition, with Congressional directions that inquiries into the obviousness of the subject matter sought to be patented are a prerequisite to patentability." *Id.*

We next turn to the obviousness analysis conducted by the Court in *Graham*. Briefly, the patent in suit, No. 2,627,798, ("the '798 patent") relates to a chisel plow that utilizes a spring clamp to enable the upward movement of the plow shank when an obstruction is encountered in the plowing process. The use of a spring clamping arrangement enabled the plow to withstand the collision without breakage. In addition to the '798 patent in suit, *Graham* obtained U.S. Pat.

No. 2,493,811 ("the '811 patent"); both *Graham* patents enabled the chisel plow to avoid severe damage to its shank as a result of encountering rocks etc. in the plowing process. *Id.* at 19-21.

During trial defendant relied on four of the five patents cited during prosecution of the '798 application which matured into the '798 patent, as well as ten other U.S. patents and two prior use spring-clamp arrangements which had not been cited. The District Court and the Court of Appeals found that taken as a whole the prior art contained "all of the mechanical elements of the '798 patent." Moreover, the Glencoe prior use clamp was found to have "all of the elements of the '798 patent." *Id.* at 22.

Following a review of the prosecution history the application which matured into the '798 patent, this Court found that Graham emphasized to the USPTO that his invention was able to reduce wear between various parts which made up the chisel plow. In addition, Graham emphasized, in the litigation and before the courts, the greater flexing qualities of the '798 patent arrangement. This Court noted the absence of such argument to the USPTO. After careful consideration of the arguments on the basis of the '811 patent and the Glencoe prior art, the Court found that the '798 patent was obvious. In specific this Court stated:

> We cannot agree with the petitioners. We assume that the prior art does not disclose such an arrangement as petitioners claim in patent '798. Still we do not believe that the argument on which petitioners' contention is bottomed supports the validity of the patent....Certainly a person having ordinary skill in the prior art, given the fact that the flex in the shank could be utilized more effectively if allowed to run the entire length of the shank, would immediately see that

> the thing to do was what Graham did, i.e., invert the shank and the hinge plate. . .We find no nonobvious facets in the '798 arrangement. The wear and repair claims were sufficient to overcome the patent examiner's original conclusions as to the validity of the patent. However, some of the prior art, notably Glencoe, was not before him....in other words, the stirrup in Glencoe serves exactly the same function as the heel of the hinge plate in '798. The mere shifting of the wear point to the heel of the '798 hinge plate from the stirrup of Glencoe – itself a part of the hinge plate – presents no operative mechanical distinctions, much less nonobvious differences.

Id. at 38-41.

Calmer v. Cook Chemical Co., involved a plastic finger sprayer with a "hold down" lid that was used as a built-in dispenser for containers or bottles of liquid insecticide products. *Id.* at 42. As the Court explained, manufacturers of insecticides had faced serious problems in developing sprayers that could be integrated with the containers or bottles in which the insecticides were marketed for many years. *Id.* at 44.

The prior art consisted of the five prior art patents cited by the Patent Office examiner during prosecution of the application that matured into Pat. No. 2,627,798, the patent in suit. *Id.* at 49. Of these, the Court looked only to two of these patents, i.e. U.S. Patent No. 2,119,884 ("the '884 patent") and U.S. Patent No. 2,586,687 ("the '687 patent"). In addition *Calmer* cited a number of prior art references, that were not before the USPTO, but this Court only looked to U.S. Patent No. 2,715,480 ("the '480 patent").

In tracing through the prosecution history of the patent in suit, this Court noted the acceptance by the patentee to the

limitations to the claims that were imposed by the Examiner. *Id.* at 51-52. As a result of prosecution history estoppel, this Court concluded that *Cook Chemical* was "not now free to assert a broader view of [the invention covered by the patent in suit]. The subject matter as a whole reduces, then, to the distinguishing features clearly incorporated into the claims." *Id.* at 54.

In concluding that the patent in suit was obvious within the meaning of 35 U.S.C. §103, the Court stated:

> Cook Chemical [plaintiff] insists, however, that the development of a workable shipper-sprayer eluded Calmer, who had long and unsuccessfully sought to solve the problem. And, further, that the long-felt need in the industry for a device such as Scoggin's together with its wide commercial success supports its patentability. These legal inferences or subtests *do focus attention on economic and motivational rather than technical issues* and are, therefore, more susceptible of judicial treatment than are the highly technical facts often present in patent litigation. . .However, these factors do not, in the circumstances of this case, tip the scales of patentability. The Scoggin invention, as limited by the Patent Office and accepted by Scoggin, rests upon exceedingly small and quite non-technical mechanical differences in a device which was old in the art. At the latest, those differences were rendered apparent in 1953 by the appearance of the Livingstone patent [the '480 patent], and unsuccessful attempts to reach a solution to the problems confronting Scoggin made before that time became wholly irrelevant. It is also irrelevant that no one apparently chose to avail himself of knowledge stored in the Patent Office and readily available by the simple expedient of conducting a

> patent search – a prudent and nowadays common preliminary to well organized research. *Mast, Foos & Co. v. Stover Mfg. Co.*, 177 U.S. 485 (1900). To us, the limited claims of the Scoggin patent are clearly evidence from the prior art as it stood at the time of the invention.
>
> We conclude that the claims in issue in the Scoggin patent must fall as not meeting the test of §103, since the differences between them and the pertinent prior art would have been obvious to a person reasonably skilled in that art.

Id. at 57-59 (emphasis added).

Thus, this Court was able to resolve the obviousness issue in *Graham* and *Cook Chemical* by viewing the prior art through the eyes of a person skilled in that art in possession of the knowledge and understanding that it teaches, without resorting to the necessity to show suggestion or motivation to combine the prior art.

II. The Federal Circuit Erred in Deviating From Its Own Earlier Line of Precedent Beginning With *Kimberly-Clark Corp. v. Johnson and Johnson Co.* and *EWP v. Reliance* in Solely Applying the Teaching, Suggestion, or Motivation Test to the Questions of Obviousness

The current Federal Circuit is conducting a teaching, suggestion, or motivation test for combining prior art references to determine obviousness with ever increasing rigidity. As a result, it is failing to carry out the essence of what it is seeking to accomplish, namely, satisfying the statutory mandate of §103 by determining the obviousness of the differences between the subject matter sought to be patented and the prior art to which the subject matter pertains. To the contrary, the teaching, suggestion, or motivation test of the Federal Circuit may be bestowing patentability upon

that which should be found obvious, and as a result the Federal Circuit is permitting "the issuance of patents whose effects are to remove extant knowledge from the public domain". *Id.* at 9. The Federal Circuit has now assumed a position in conflict with Supreme Court precedent, its own logically-reasoned earlier precedent and the intent of Congress in enacting §103.

The nub of the conflict is the way the Federal Circuit is defining the involved art, i.e. the prior art to which the claimed invention relates and from which the patent claims differ. More specifically, the differences are those which exist from a comparison of the patent claims with the prior art relied on by the USPTO in granting the patent. The key to defining the involved art correctly is found by viewing the field of the claimed subject matter narrowly. Thereafter, it is necessary to focus on the differences between the claimed invention and the involved art, taken in its entirety and including the knowledge and understanding of a person skilled in the art. *Hotchkiss v. Greenwood,* 52 U.S. 248 (1850); *Graham v. John Deere,* 383 U.S. 1 (1966); *Kimberly-Clark Corp. v. Johnson and Johnson Co.,* 745 F.2d 1437 (Fed. Cir. 1984); *EWP v. Reliance,* 755 F.2d 898 (Fed. Cir. 1985). How to define the involved art correctly was illustrated by Supreme Court precedent in *Hotchkiss, John Deere* and *Cook Chemical* in part 1 of this brief. The following line of early Federal Circuit cases are analyzed to illustrate the Federal Circuit's faithful following of the mandate of this Court.

A. Kimberly-Clark

In Kimberly-Clark the District Court failed to apply the proper art because it did not take into consideration the significance of the claimed invention, i.e. an adhesive serving a dual function. As Judge Giles S. Rich stated: "The court must consider, on the obviousness issue, only what was

granted." *Kimberly-Clark,* 745 F.2d at 1449. More specifically, in defining the involved art, a court should look to see what differentiated the claimed subject matter from the prior art and caused the USPTO to grant the patent. The meaning of prior art in legal theory is, "knowledge that is available, including what would be obvious from it, at a given time to a person of ordinary skill in the art." *Id.* at 1453. In defining a person of ordinary skill in the art Judge Rich observed:

> It should be clear that that hypothetical person is not the inventor, but an imaginary being possessing "ordinary skill in the art" created by Congress to provide *a standard of patentability*, a descendant of the "ordinary mechanic acquainted with the business" of *Hotchkiss v. Greenwood*.

Id. at 1454.

As a result, the Federal Circuit reversed *Kimberly-Clark* because it found that the District Court's reasoning was fatally flawed. The Federal Circuit stated as the reason for its reversal that:

> After some general discussion, the court came to the conclusion that 'The inquiry...is whether two lines of adhesive, both of which penetrate the napkin and seal the cover as opposed to only one penetrating and sealing the cover, is a non-obvious invention'. At the outset, that is a misstatement of the issue, which is whether the *subject matter claimed would have been obvious*, at the time of Roeder's invention, to one of ordinary skill in the art...it is clear from the patent in suit, as at other times the trial court seems to have appreciated, that *adhesive had to serve the dual function* of (1) wrapper penetration and sealing and (2) garment attachment, a concept totally lacking in

> Champaigne, or in any other prior art reference, which is why the PTO allowed Roeder's claims. This essential of the claim invention seems to have been lost sight of by the trial court in its discussion of obviousness.

Id. at 1448.

B. EWP v. Reliance Universal

Similarly, in *EWP v. Reliance*, 755 F.2d 898 (Fed. Cir. 1985), the Federal Circuit again concluded that the involved art was not properly defined at the trial level. Judge Rich explained that the level of ordinary skill in the art is to be decided by the court *separate* from the determination of the art to which the claimed subject matter pertains, i.e. the involved art. The disclosure of the patent in question was directed to a method for producing wire mesh reinforced concrete pipes having a socket and ball and the claim itself referred to reinforced concrete. However, following the rationale of *Kimberly-Clark*, the Federal Circuit found that the pertinent prior art was determined to be wire-reinforcement of tubular form, the end portion of which can be enlarged by stretching, thus narrowing the field of inquiry to the invention actually claimed. *Id.* at 906.

Once having correctly defined the involved art, the analysis proceeded as follows:

> We cannot escape the conclusion that Francois did no more than apply *the presumed knowledge of the art* to provide an obvious solution to a simple problem: use crimped wire where there is a need in a subsequent forming step to expand or stretch it. *That presumed knowledge was, of course, available to all.* It is irrelevant whether or not Francois was aware of it. Patentability under the statute §103, is a decision made on the basis of a hypothesis: Would the

> invention have been obvious "to a person having ordinary skill in the art to which the subject matter pertains" in the light of all knowledge conveyed by 'prior art' as defined by statute and case law. It is a decision which must be made by courts because the law assigns that task to them. The function of witnesses, expert and otherwise, is to assist the court in determining and comprehending facts.
>
> The trial court properly undertook to decide upon the level of ordinary skill in the art, a point upon which neither party introduced evidence. In doing so, it clearly erred *in assuming that the involved art is making reinforced concrete products*. Considering the invention here claimed, we see it as a narrower field: the making of reinforcing wire cages and the like. We mention it only because *the view that concrete technology is involved* seems to have been the basis for finding several references not pertinent because they *did not relate to concrete pipe* or, even more specifically, bell and spigot pipe. This was a ground for effectively ignoring the relevant teaching of the German patent because the *concrete body* was different, made by a different process, and "there is no disclosure of a socket of increased diameter at one end". *That is of no moment*. Its significance is in its teaching that when a wire reinforcing cages is to be expanded, the wires undergoing stretching should be crimped or, in the words of the claim in suit, provided with "successive deformed non-rectilinear portions," which means the same thing.

Id. at 907 (emphasis added).

The correct finding that the claimed subject matter was unpatentable was reached because Judge Rich avoided the trap

of considering only the field of concrete products, more specifically to concrete pipe or even more specifically ball and spigot pipe, but instead properly looked to the involved art. Specifically, he looked to the relevant prior art as a whole and found that the use of crimped wire where there is a need in a subsequent forming step to expand and stretch is *knowledge available to all*.

Without doubt, clearly focusing on what the inventor finally succeeded in patenting leads to a correct determination of the scope and content of the involved prior art. *Kimberly*, 745 F.2d 1437. As emphasized in *EWP*, and later cited in a 1993 unpublished Federal Circuit decision, "a [prior art] reference must be considered for everything it *teaches* by way of technology and is not limited to the particular *invention* it is describing and attempting to protect." *EWP*, 755 F.2d at 907.

From the above-analysis it is clear that the involved relevant references count collectively toward the teachings of the prior art as a whole. *Lamb-Weston v. McCain Foods*, 73 F. 3d 546 (Fed Cir. 1996) (following *EWP* in determining the scope of the prior art).

When viewed collectively, any suggestion or motivation must ultimately be derived from the involved prior art; it can be derived solely from prior art teachings by combining such teaching with the presumed knowledge of one skilled in the art and using such teaching to solve the same or similar problem. *In re Hans Oetiker*, 977 F.2d 1443 (Fed.Cir. 1992) (Nies, J. concurring) (following EWP in recognizing the contribution of knowledge of one skilled in the art beyond a literal reading of the expressed teachings of a reference).

Thus, following this line of precedent, the Federal Circuit was able to resolve the obviousness issue by viewing the prior art through the eyes of a person skilled in that art in

possession of the knowledge and understanding that it teaches, without resorting to the necessity to show suggestion or motivation to combine the prior art.

III. The Supreme Court Should Review *KSR* and Direct the Federal Circuit to Return to the Obviousness Standard of *Graham v. John Deere* and the Federal Circuit's Earlier Line of Precedent

In deciding *Teleflex, Inc. v. KSR*, the Federal Circuit made a serious error in finding the *ultimate issue to be that of a motivation* to combine prior art, and more specifically, whether one of ordinary skill in the art would have been motivated to attach a known electronic control on the support bracket of a known adjustable pedal ssembly disclosed in the prior art. *Teleflex, Inc. v. KSR*, 119 Fed. Appx. 282 (Fed. Cir. 2005) (unpublished). This finding is wrong. The ultimate issue is obviousness under §103 irrespective of the methodology used to determine it.

Under the statute as interpreted by this Court and early Federal Circuit precedent, obviousness is grounded on a determination of whether a person skilled in the art would understand from his own technical and industrial knowledge that the teachings of the references or other statutory prior art are logically combinable and would (or would not), when combined, render the claimed subject matter obvious. This statutory role of the person skilled in the art must not be excluded from the analysis by seeking *motivation* only from printed references to determine whether or not prior art is combinable to establish obviousness.

The requirements in the Federal Circuit's summation in *KSR* show that its *teaching, suggestion, or motivation* test has become formulistic and does not serve its intended purpose of being an available, but not a mandatory, requirement which may be useful in helping to determine obviousness. The *KSR*

court requires that a district court make *specific findings* of a teaching, suggestion, or motivation to combine prior art teachings in the *particular manner claimed*. *Id.* at 290. Such a requirement would improperly restrict an analysis of obviousness because it limits the inquiry to only a narrow segment of the prior art, thus deviating from this Court's precedent. The requirement for *specific findings* of *teaching, suggestion, or motivation* to combine prior art references in the particular manner claimed is tantamount to requiring a finding of lack of novelty, even though the references are non-anticipatory by law because the prior art is applied in combination. An even more significant loss by the strictness of the test is that it fails to consider, and indeed excludes, the wide general knowledge of a skilled engineer which, if included, would extend the literal word-for-word reading of the references to include the prior art as a whole as required by §103.

In *KSR*, the Federal Circuit found it unobvious to position a known electronic throttle control on the support bracket for a known adjustable pedal assembly rather than on the assembly itself. The advantage said to be obtained by this configuration is that it is less expensive, less complex and more compact. The Federal Circuit found that there was no *specific motivation* taught in the prior art to construct the adjustable pedal-bracket combination *in the particular manner claimed*. *Id.* at 290. However, the court failed to take in to consideration that a skilled automotive engineer would know of the trend in the industry to make automotive assemblies more compact. With this knowledge in mind, he would think of repositioning of the component parts, including the electronic sensor in a way which would offer a reasonable expectation of success in achieving his objective. According to the Federal Circuit, a reference disclosing attaching an electronic control to pedal assembly housing rather than to its

support bracket lacks a suggestion as motivation to combine it with a prior art reference directed to an adjustable pedal assembly not disclosing the electronic control. This thinking would even deny the reasoning of *Hotchkiss v. Greenwood* because, in that case, there was no specific reference showing that potter's clay or porcelain could be substituted for metal in the construction of a known doorknob in a known manner. *Hotchkiss v. Greenwood,* 52 U.S. 248. Of course, in *Hotchkiss* the choice of potter's clay or porcelain was held to be the work of the skilled mechanic, because he, using his own knowledge, would understand how to make that choice from the then available materials for decorative or economic reasons.

A concept that the current Federal Circuit failed to apply in the *KSR* case is the knowledge and ability of the skilled engineer or chemist, a person who in the course of his or her daily work finds out, devises, or makes discoveries, a concept which has to be factored in to all obviousness considerations. Such knowledge and ability may or may not result in patentable inventions, and indeed such a person will not be the inventor of the particular invention being challenged. However, such a person will often be a peer or colleague in the 21st century world of team research. Nonetheless, the Federal Circuit persists in limiting the knowledge of the *hypothetical person* to whether a particular reference would be of *special interest or important in the field*. Whether the reference is of special interest or importance is irrelevant. Putting it in the words of Judge Oscar Hirsh Davis:

> The simple fact probably is that those teachings of the German and French patents were actually not well-known even in the pertinent art, but under the settled rule of §103 that fact is irrelevant – they were still part-and-parcel of the prior art even if they were not in fact well-known in the United States; they are an

> integral part of the "*presumed*" knowledge [of a person skilled in the art].

EWP, 755 F.2d at 908 (Davis, O.H., concurring).

While the Federal Circuit may give lip service to the existence of the hypothetical person because these words appear in §103, in point of fact, the contribution of such person's knowledge and understanding as a skilled engineer or chemist is often omitted in the Federal Circuit's analysis or instructions to a district court upon remand.

One of the difficulties in defining the role of the person skilled in the art occurs because of the Federal Circuit's failure to recognize the real problems faced by the inventor, expressed or implied in the patent specification. In *KSR*, the problem was said to be to design a smaller, less complex and less expensive pedal assembly. *KSR*, 119 Fed. Appx. at 284. So far, so good. At this point, instead of evaluating what the teachings of the prior art as a whole meant to a skilled engineer, the Federal Circuit looked to evaluate obviousness on the basis only to the *specific manner claimed*, not to the differences between what was specifically claimed and the prior art as a whole, as required by *Graham v. John Deere* and, consequently, erred in its conclusion.

As discussed above, *Hotchkiss, Graham, Kimberly-Clark,* and *EWP* make no mention of teaching, suggestion, or motivation in an obviousness determination. *Hotchkiss*, 52 U.S. 248; *Graham*, 383 U.S. 1; *Kimberly-Clark*, 745 F.2d 1437; *EWP*, 755 F.2d 898. Certainly, an explicit motivation to combine references is not the ultimate question; it is one small part of making the references count collectively; *i.e.* applying the prior art as a whole. An important part of the prior art as a whole is the extent of the knowledge attributable to the hypothetical person skilled in the art. When this knowledge is properly considered the teaching, suggestion, or

motivation required by the Federal Circuit to combine multiple prior art references naturally occurs. That knowledge, properly recognized and combined with the prior art teachings, may by itself provide the suggestion, or motivation leading to a conclusion of obviousness. *In re Oetiker*, 977 F.2d 1443.

Determining the actual meaning of the *teaching, suggestion, or motivation* test created by the Federal Circuit bears scrutiny, whether or not it is used to determine how to combine references. *Teaching*, in the broad sense, should be that of the prior art taken as a whole as required by §103. *Suggestion or motivation* may be synonymous or different, depending upon how the Federal Circuit applies its test on a case by case basis. *Motivation* should be considered simply the existence of a particular problem that one wishes to solve in particular art. In *Cook Chemical*, this Court recognized motivation from an economic basis, rather than technical. *Graham*, 383 U.S. at 57. *Suggestion* should mean at least the germ of an idea as to how to solve that problem and not the solution to the problem itself. If the solution to the problem *in the particular manner claimed* is taught by the prior art the claimed subject matter would lack novelty.

During the Federal Circuit's development of the *teaching, suggestion, or motivation* test, the expression "clearly suggests" or its equivalent often appeared. *Gillette Co. v. S.C. Johnson & Son, Inc.*, 919 F.2d 720 (1990). *Gillette* took the position that "the clear suggestion test is tantamount to requiring an exact statement of the claimed subject matter, which would rebut novelty altogether." *Id.* at 723. In response, the Federal Circuit pointed out that "we did not go that far in *Kimberly-Clark*, nor do we now." *Id.* The court further explained its view of clear suggestion to be:

> As to whether "clear suggestion" is a proper test of obviousness, we note initially that *Kimberly-Clark* is not the only instance in which we have made use of that phrase in a discussion of obviousness. Various other formulations of the requisite level of suggestion for combing prior art disclosures have been set forth in our precedent. For example, we have said that "obviousness does not require absolute predictability of success. . .For obviousness under §103, all that is required is a reasonable expectation of success."

Id. at 723-724 (emphasis added).

In the case now before this Court, the Federal Circuit has exceeded the teaching of *Kimberly-Clark* and *Gillette,* and has lowered the standard of patentability to reach the result feared by *Gillette* in settling a standard that would almost rebut novelty. *Id.* at 723. By doing this, the Federal Circuit is in conflict with their own precedent, as well as the precedent of this Court. In *Graham v. John Deere*, this Court determined that the enactment by Congress of §103 did not lower the standard of obviousness set by its precedents. *Graham,* 383 U.S. 1.

CONCLUSION

The economic impact of upholding patents which deprive the public of obvious knowledge which should be in the public domain has been discussed at length by the other *amici*. We believe that by continuing to adhere to this Court's precedential determination of obviousness and interpretation of §103 as explained in this brief, the level of patentability can be restored and the damaging effect of granting substandard patents can be curtailed. We urge this Court to grant KSR's Petition and, by its review, direct the Federal Circuit as to the correct methodology of an obviousness

determination with a recognition of the proper level of input by the hypothetical person skilled in the art.

Respectfully Submitted,

JOSEPH V. COLAIANNI, SR.
Counsel of Record
PATTON BOGGS, LLP
2550 M Street, NW
Washington, DC 20037
(202) 457-6174

JAMES E. ARMSTRONG, III
ARMSTRONG, KRATZ, QUINTOS,
HANSON & BROOKS, LLP
1725 K Street, NW
Suite 1000
Washington, DC 20006
(202) 659-2930

Counsel for Amici Curiae

562D

No. 04-1350

Supreme Court, U.S.
FILED
AUG 22 2006
OFFICE OF THE CLERK

In The Supreme Court of the United States

KSR INTERNATIONAL CO.,

Petitioner,

v.

TELEFLEX, INC. AND TECHNOLOGY HOLDING CO.,

Respondents.

On Writ Of Certiorari To The United States Court Of Appeals For The Federal Circuit

BRIEF FOR *AMICUS CURIAE* COMPUTER & COMMUNICATIONS INDUSTRY ASSOCIATION IN SUPPORT OF PETITIONER

BRIAN KAHIN
MATTHEW SCHRUERS
COMPUTER & COMMUNICATIONS INDUSTRY ASSOCIATION
666 Eleventh Street, NW
Washington, DC 20001
(202) 783-0070

JONATHAN BAND
Counsel of Record
JONATHAN BAND PLLC
21 Dupont Circle, NW
8th Floor
Washington, DC 20036
(202) 296-5675
jband@policybandwidth.com

Counsel for Amicus Curiae

August 22, 2006

COCKLE LAW BRIEF PRINTING CO. (800) 225-6964
OR CALL COLLECT (402) 342-2831

TABLE OF CONTENTS

	Page
TABLE OF AUTHORITIES	iii
INTEREST OF *AMICUS*	1
SUMMARY OF ARGUMENT	2
ARGUMENT	2
I. The Federal Circuit's Suggestion Test Defies Precedent And Statute	2
A. The Federal Circuit's decision should be reversed because it contravenes Supreme Court precedent	3
B. The suggestion test lowers the standard of patentability, defying this Court's conclusion in *Graham*	4
C. The suggestion test shifts the burden of establishing nonobviousness away from the applicant, thus inappropriately reading nonexistent language into Section 103	6
D. The suggestion test fails to reflect reality, particularly in fields where tacit knowledge predominates	8
II. The Federal Circuit's Decision Threatens Innovation By Magnifying And Reinforcing Other Problems In The Patent System	10
A. A diminished nonobviousness standard has created a torrent of low-quality patents	11
B. A diminished nonobviousness standard lowers the value of patents and leads to strategic portfolio racing	15

TABLE OF CONTENTS – Continued

Page

C. A diminished nonobviousness standard drives proliferation, clutter, and uncertainty, all of which increase costs 17

D. A diminished nonobviousness standard promotes opportunistic behavior 18

CONCLUSION 22

TABLE OF AUTHORITIES

Page

CASES

American Hoist & Derrick Co. v. Sowa & Sons, Inc., 725 F.2d 1350 (Fed. Cir.), *cert. denied*, 469 U.S. 821 (1984) 8, 20

Anderson's-Black Rock v. Pavement Co., 396 U.S. 57 (1969) 5, 6

Atlantic Works v. Brady, 107 U.S. 192 (1882) 10, 20

eBay, Inc. v. MercExchange LLC, 126 S. Ct. 1837 (2006) 12

Graham v. John Deere Co., 383 U.S. 1 (1966) 4, 5, 6, 7

Great Atl. & Pac. Tea Co. v. Supermarket Corp., 340 U.S. 147 (1950) 3, 5, 6

In re Piasecki, 745 F.2d 1468 (Fed. Cir. 1984) 6, 7

In re Rouffet, 149 F.3d 1350 (Fed. Cir. 1998) 4, 6

In re Warner, 379 F.2d 1011 (C.C.P.A. 1967) 7

Keene Corp. v. United States, 508 U.S. 200 (1993) 7

Lincoln Co. v. Stewart-Warner Corp., 303 U.S. 545 (1938) 5

Sakraida v. Ag Pro, Inc., 425 U.S. 273 (1976) 2, 3, 5

Standard Oil Co. v. American Cyanamid Co., 774 F.2d 448 (Fed. Cir. 1985) 9

Teleflex, Inc. v. KSR Int'l Co., 119 Fed. App. 282 (Fed. Cir. 2005) 3

TABLE OF AUTHORITIES – Continued

Page

STATUTES AND REGULATIONS

Patent Act of 1952, ch. 950, § 1, 66 Stat. 792, codified as amended at 35 U.S.C. § 1 *et seq.*:
35 U.S.C. § 102 6
35 U.S.C. § 103(a) 2, 4, 6
35 U.S.C. § 261 12

37 C.F.R. §§ 1.20(e)-(f) (2006) 15

Changes to Practice for the Examination of Claims in Patent Applications, 71 Fed. Reg. 61 (Jan. 3, 2006) 21

MISCELLANEOUS

AIPLA, *Report of the Economic Survey* at I-101 (2005) 18

John R. Allison & Mark A. Lemley, *The Growing Complexity of the United States Patent System*, 82 B.U.L. Rev. 77 (2002) 21

Ian Austen, "Court Ruling in BlackBerry Case Puts Service to U.S. Users at Risk," N.Y. Times, Oct. 8, 2005, at C3 12

James E. Bessen & Robert M. Hunt, *An Empirical Look at Software Patents* (Mar. 2004) (Fed. Reserve Bank of Phila. Working Paper No. 03-17) 17

Business Perspectives on Patents – Software and the Internet: Hearing Before the Federal Trade Commission (Feb. 27, 2002) (statement of Bradford L. Friedman, Director of Intellectual Property, Cadence Design Systems, Inc.) *available at* http://www.ftc.gov/opp/intellect/020227trans.pdf 19

TABLE OF AUTHORITIES – Continued

Page

Competition, Economic, and Business Perspectives on Substantive Patent Law Issues: Non-Obviousness and Other Patentability Criteria: Hearing Before the Federal Trade Commission (Oct. 30, 2002) *available at* http://www.ftc.gov/opp/intellect/021030trans.pdf 18

Federal Trade Comm'n, *To Promote Innovation: The Proper Balance of Competition and Patent Law and Policy* (2003) (highlighting infirmities of suggestion test) *available at* http://www.ftc.gov/os/2003/10/innovationrpt.pdf ..... *passim*

Martin Goetz, *Patents: Where's the Invention?* Computerworld, Mar. 6, 2006, *available at* http://www.computerworld.com/governmenttopics/government/policy/story/0,10801,109169,00.htm 9

Bronwyn H. Hall & Rosemarie H. Ziedonis, *The Patent Paradox Revisited: An Empirical Study of Patenting in the US Semiconductor Industry, 1979-95*, 32 Rand J. of Econ. 101 (2001) 16

Robert M. Hunt, *Nonobviousness and the Incentive to Innovate: An Economic Analysis of Intellectual Property Reform* (Mar. 1999) (Fed. Reserve Bank of Phila. Working Paper 99-3) 16, 17

Intellectual Property Owners Association, *IPO Survey: Corporate Patent Quality Perceptions in the U.S.*, Sept. 20, 2005, *available at* http://www.ipo.org/PatentQualityReport/ 14

Paul H. Jensen *et al.*, *Disharmony in International Patent Office Decisions*, 15 Fed. Cir. B.J. 679 (2006) 13

TABLE OF AUTHORITIES – Continued

Page

William M. Landes & Richard A. Posner, *The Economic Structure of Intellectual Property Law* (2003) 14

Glynn S. Lunney, Jr., *E-Obviousness*, 7 Mich. Telecom. & Tech. L. Rev. 363 (2001) 15

Stephen A. Merrill et al., National Research Council, *A Patent System for the 21st Century* (2004) *available at* http://www.nap.edu/html/patentsystem/0309089107.pdf 8

Note, *The Disclosure Function of the Patent System (or Lack Thereof)*, 118 Harv. L. Rev. 2007 (2005) 19

OECD, *Patents and Innovation: Trends and Policy Challenges* (2004) *available at* www.oecd.org/dataoecd/48/12/24508541.pdf 13

Cecil D. Quillen, Jr. & Ogden H. Webster, *Continuing Patent Applications and the U.S. Patent and Trademark Office – Updated*, 15 Fed. Cir. B.J. 635 (2006) 13

Markus G. Reitzig et al., *On Sharks, Trolls, and Other Patent Animals – 'Being Infringed' as a Normatively Induced Innovation Exploitation Strategy*, Feb. 2006 (working paper) *available online at* http://ssrn.com/abstract=885914 20

Giles S. Rich, *Congressional Intent – Or, Who Wrote the Patent Act of 1952* in *Patent Procurement and Exploitation* (BNA 1963) 4, 5

Giles S. Rich, *The Principles of Patentability*, 28 Geo. Wash. L. Rev. 393 (1960), *reprinted in* John Witherspoon, ed., *Non-Obviousness: The Ultimate Condition of Patentability* (BNA 1980) 12

TABLE OF AUTHORITIES – Continued

Page

U.S. Patent & Trademark Office, *Corporate Plan 2001 available at* http://www.uspto.gov/web/offices/com/corpplan/pt04.pdf 14

R. Polk Wagner & Gideon Parchomovsky, *Patent Portfolios*, 154 U. Pa. L. Rev. 1 (2005) 16

BRIEF *AMICUS CURIAE* OF COMPUTER & COMMUNICATIONS INDUSTRY ASSOCIATION IN SUPPORT OF PETITIONER

The Computer & Communications Industry Association (CCIA) submits this brief as *amicus curiae* in support of Petitioner KSR International, Inc., and respectfully requests that the Federal Circuit be reversed. Petitioner and Respondents have consented to the filing of this brief by submitting letters of blanket consent to the Clerk of the Court.

INTEREST OF *AMICUS*

The Computer & Communications Industry Association is a non-profit trade association dedicated to open markets, open systems, and open networks. CCIA members participate in many sectors of the computer, information technology, and telecommunications industries and range in size from small entrepreneurial firms to the largest in the industry.[1] CCIA members use the patent system regularly, and depend upon it to fulfill its constitutional purpose of promoting innovation. CCIA is increasingly concerned that the patent system has expanded without adequate accountability and oversight.

[1] Counsel for a party did not author this brief in whole or in part. No person or entity other than CCIA, its members, or its counsel made a monetary contribution to the preparation or submission of this brief.

SUMMARY OF ARGUMENT

The Federal Circuit's opinion below defies numerous precedents of this Court, inappropriately reads non-existent language into Section 103, and produces a perverse regime under which the more commonplace and obvious the combination, the easier it may be to patent. This test threatens innovation by magnifying systemic problems in the patent system that are especially detrimental to the information and communications technology industries. Lower standards devalue patents and increases overall transaction costs. The eviscerated nonobviousness standard has produced a torrent of low-value patents, a widespread perception of declining patent quality, and a rise in strategic behavior. The result is uncertainty, high costs, and a landscape cluttered with vast numbers of questionable and trivial patents, which ultimately defeat the public disclosure function of the patent system.

ARGUMENT

I. The Federal Circuit's Suggestion Test Defies Precedent And Statute.

A study of the law on combination patents reveals a tale of two divergent standards. This Court's standard, last articulated in *Sakraida v. Ag Pro, Inc.*, 425 U.S. 273 (1976), tells us that new combinations of old elements are obvious unless they produce a new or different result. This standard coheres with the Court's prior decisions, the language of the Patent Act, and practices in the real world. The other standard is the Federal Circuit's suggestion test. The suggestion test tells us that new combinations of old elements are not obvious unless there is made a specific showing of motivation, suggestion, or teaching to make the

combination. *See Teleflex, Inc. v. KSR Int'l Co.*, 119 Fed. App. 282, 285 (Fed. Cir. 2005). As discussed below, this standard conflicts with this Court's prior decisions and does not comport with the language of the Patent Act or efficient patent administration.

A. The Federal Circuit's decision should be reversed because it contravenes Supreme Court precedent.

This Court's most recent ruling on combination patents states unambiguously that a "patent for a combination which only unites old elements with no change in their respective functions . . . obviously withdraws what already is known into the field of its monopoly and diminishes the resources available to skillful men." *Sakraida v. Ag Pro, Inc.*, 425 U.S. 273, 281 (1976) (quoting *Great Atl. & Pac. Tea Co. v. Supermarket Corp.*, 340 U.S. 147, 152 (1950)). *Sakraida* affirms Supreme Court precedent that new combinations of old elements are obvious unless they produce a new or different result. *Id.* at 282.

In stark contrast to this Court's precedents, the Federal Circuit has formulated its own test for *combinations* of known art. Instead of holding combinations to a high standard, it presumes that they are patentable. There must be an explicit showing of motivation, suggestion, or teaching to make the combination in order show obviousness – commonly known as the "suggestion test."[2]

---

[2] *In re Lee*, 277 F.3d 1338, 1345 (Fed. Cir. 2002) (rejecting "common knowledge and common sense" in favor of requiring evidence in the prior art). *See generally* Federal Trade Comm'n, *To Promote Innovation: The Proper Balance of Competition and Patent Law and Policy*, ch. 4, at 8-15 (2003) (highlighting infirmities of suggestion test) *available at* http://www.ftc.gov/os/2003/10/innovationrpt.pdf (hereinafter "FTC Report").

While purporting to reduce subjectivity and hindsight, the requirement of such a showing effectively minimizes the role of the hypothetical "person having ordinary skill in the art," or "PHOSITA," *see* 35 U.S.C. § 103(a), especially in sectors where prior art is weakly documented and unorganized. *See infra* Part I.D. This activist rule transforms the requirement of nonobviousness into a mere elaboration of the novelty requirement. It has no support in Section 103 or any case law other than that of the Federal Circuit and its predecessor.

B. The suggestion test lowers the standard of patentability, defying this Court's conclusion in *Graham*.

In *Graham v. John Deere Co.*, 383 U.S. 1 (1966), this Court concluded that the 1952 Patent Act did not alter the preexisting standard of patentability. Most inventions are combinations of known elements, *In re Rouffet*, 149 F.3d 1350, 1357 (Fed. Cir. 1998), and *Graham*'s affirmation of the historical standard holds true for these inventions as well. By contrast, the Federal Circuit's suggestion test aggressively lowers the standard when known elements are combined.

In *Graham*, the respondent patent owner and five *amicus* briefs from the patent bar argued that Congress had quietly lowered the standard of patentability in enacting the 1952 Patent Act, implicitly overruling Supreme Court precedent. *See Graham v. John Deere Co.*, 383 U.S. 1, 16 (1966).[3] This Court rejected that contention,

[3] Prior to the 1952 Patent Act, the patent bar had been concerned that too much emphasis was placed on the concept of "invention" and that too few patents were upheld. *See* Giles S. Rich, *Congressional*

(Continued on following page)

dismissing the idea that Section 103 "was intended to sweep away judicial precedents and to lower the level of patentability." *Id.* The Court refused to "find in 103 a relaxed standard, supposedly a congressional reaction to the 'increased standard' applied by this Court in its decisions over the last 20 or 30 years," by concluding that "we find no change in the general strictness with which the overall test is to be applied." *Id.*

Graham thus left untouched the established standard for combinations. This standard was subsequently reaffirmed in *Anderson's-Black Rock v. Pavement Co.*, 396 U.S. 57, 61 (1969) (citing *Lincoln Co. v. Stewart-Warner Corp.*, 303 U.S. 545, 549 (1938)), and again in *Sakraida*, which admonished lower courts to "scrutinize combination patent claims with a care proportioned to the difficulty and improbability of finding invention in an assembly of old elements. . . ." 425 U.S. at 281 (quoting *Great Atl. & Pac. Tea Co., supra*).

Furthermore, *Graham* anchored the standard of patentability to the Constitution. The Court held that

> Congress in the exercise of the patent power may not overreach the restraints imposed by the stated constitutional purpose. Nor may it enlarge the patent monopoly without regard to the innovation, advancement or social benefit gained thereby. . . . And it is in this light that patent validity 'requires reference to a standard written into the Constitution.'

Intent – Or, Who Wrote the Patent Act of 1952 in *Patent Procurement and Exploitation* 63-64, 70 (BNA 1963).

Graham, 383 U.S. at 5-6 (quoting *Great Atl. & Pac. Tea Co. v. Supermarket Corp.*, 340 U.S. at 154 (concurring opinion)); *see also Anderson's-Black Rock*, *supra*. The suggestion test detaches this standard from its constitutional moorings by enlarging the statutory monopoly solely as precaution against hindsight, and without regard to its impact on innovation. *See In re Rouffet*, 149 F.3d at 1357-58.

Not only is the Federal Circuit's suggestion test inconsistent with the constitutional roots of the standard of patentability, as discussed below, this aggressively lowered standard is also incompatible with the statute and unrealistic in practice.

C. The suggestion test shifts the burden of establishing nonobviousness away from the applicant, thus inappropriately reading non-existent language into Section 103.

The suggestion test manifests the Federal Circuit's view that a patent applicant has no responsibility to show nonobviousness. Rather, the Federal Circuit's view is that the U.S. Patent and Trademark Office (USPTO) must prove that the claimed invention is obvious. *In re Piasecki*, 745 F.2d 1468, 1472 (Fed. Cir. 1984). The suggestion test thus places the burden of proof under Section 103 on the patent examiner.

While the phrase 'a person shall be entitled to a patent unless' in Section 102 indicates that the Section 102 burden may be appropriately placed on the agency, Section 103 lacks this language. The Federal Circuit conveniently overlooks the conspicuous absence of this phrase from Section 103, and instead imports it from

Section 102. *See In re Warner*, 379 F.2d 1011, 1016 (C.C.P.A. 1967) ("We think the precise language of 35 U.S.C. § 102 that 'a person shall be entitled to a patent unless,' concerning novelty *and unobviousness*, clearly places a burden of proof on the Patent Office which requires it to produce the factual basis for its rejection of an application under sections 102 *and 103*") (emphases supplied)). Thus, the Federal Circuit bootstraps the section 102 language into Section 103: "*Graham* is interpreted as continuing to place the 'burden of proof on the Patent Office which requires it to produce the factual basis for its rejection of an application under sections 102 *and 103*.'" *In re Piasecki*, 745 F.2d at 1472 (quoting *In re Warner*, *supra*) (emphasis supplied). This construction finds no support in *Graham*, however.

Moreover, the Federal Circuit's application of Section 102's language to Section 103 contravenes the canon of statutory construction that "where Congress includes particular language in one section of a statute but omits it in another . . . it is generally presumed that Congress acts intentionally and purposely in the disparate inclusion or exclusion." *Keene Corp. v. United States*, 508 U.S. 200, 208 (1993). In *Keene*, the Court declined to import a phrase from one section into another from which that phrase was absent, citing the Court's "duty to refrain from reading a phrase into the statute when Congress has left it out." *Id.* Unlike Section 102, the Section 103 text contains no implication that the burden of proof falls on the examiner. *Graham* makes it clear that "inquiries into the obviousness of the subject matter sought to be patented are a prerequisite to patentability." 383 U.S. at 17. The Federal Circuit's suggestion test, by contrast, assigns a heavy evidentiary burden to the examiner to combine specific

teachings, suggestions, or motivations that the applicant is not even obliged to report. The Federal Circuit then grants the issued patent an enhanced presumption of validity that requires challengers to provide clear and convincing evidence that the patent is invalid, *American Hoist & Derrick Co. v. Sowa & Sons, Inc.*, 725 F.2d 1350, 1368 (Fed. Cir.), *cert. denied*, 469 U.S. 821 (1984) – an especially daunting prospect for amorphous concepts such as "motivation." For this reason, the Federal Circuit's test should be brought into line with this Court's jurisprudence.

D. The suggestion test fails to reflect reality, particularly in fields where tacit knowledge predominates.

Not only does the Federal Circuit's suggestion test find no support in statute or precedent, but it also fails to reflect practices and expertise in the real world.

The suggestion test requires "actual evidence" supporting a "clear and particular" showing to establish nonobviousness. Generally, however, sources of prior art are unlikely to document the motivation for obvious combinations. "[I]f it is obvious to those of skill in the art to combine references, it is unlikely that they will publish such information." Stephen A. Merrill *et al.*, National Research Council, *A Patent System for the 21st Century* 90 (2004) *available at* http://www.nap.edu/html/patentsystem/0309089107.pdf ("NRC Report"); *see also* FTC Report, *supra* note 2, ch. 4, at 11 (recounting obvious yet undocumented developments related to the notorious Selden patent on the automobile). This is especially problematic for fields such as software and business methods where

the prior art is implemented without public documentation. NRC Report, *supra*, at 88.

Thus, under the suggestion test, even the most banal combination could survive Section 103, merely because there is little opportunity and little motivation to record the many possible trivial combinations. *Id.* at 89. The perverse result is that the more commonplace and obvious the combination, the *easier* it may be to patent.

The suggestion test also marginalizes the "person having ordinary skill in the art" in contravention of *Graham* and Section 103. The Federal Circuit has belittled the hypothetical PHOSITA as a mere journeyman, "one who thinks along the line of conventional wisdom in the art and is not one who undertakes to innovate, whether by patient, and often expensive, systematic research or by extraordinary insights, it makes no difference which." *Standard Oil Co. v. American Cyanamid Co.*, 774 F.2d 448, 454 (Fed. Cir. 1985). The suggestion test goes further, implying that people having ordinary skill in information technology industries, for example, do not have the insight or skill to combine two references unless specifically instructed to do so. In today's intensely competitive economy, this makes no sense. The operating level of competition and innovation is defined not by mediocrity as the Federal Circuit assumes but by the talents of hundreds of thousands of creative engineers worldwide. *See* FTC Report, ch. 4 n.70. This is especially true for information technology, where convergence and integration are taken for granted.[4] The Federal Trade Commission (FTC) accordingly

---

[4] *See* Martin Goetz, *Patents: Where's the Invention?* Computerworld, Mar. 6, 2006, *available at* http://www.computerworld.com/governmenttopics/government/policy/story/0,10801,109169,00.html. ("As more and more

(Continued on following page)

recommends that the suggestion test be modified to reflect the "creativity and problem-solving skills that in fact are characteristic of those having ordinary skill in the art." FTC Report, Exec. Summ. at 11-12 (Recommendation 3b).

II. The Federal Circuit's Decision Threatens Innovation By Magnifying And Reinforcing Other Problems In The Patent System.

The standard of nonobviousness has long been recognized as the linchpin of patent policy. It determines the ease with which patents can be secured, the overall volume of patenting, and the degree to which competitors, vendors, and users of the technology will be subject to the patents of others. It determines the overall costs associated with applying for, maintaining, asserting, identifying, evaluating, avoiding, and negotiating patents. With lower standards, the overall transaction costs of the patent system will rise, while the average value of each patent will fall.

Abuses associated with low-quality patents are not new. Justice Bradley recognized the heart of the problem in *Atlantic Works v. Brady*, 107 U.S. 192 (1882):

> [A]n indiscriminate creation of exclusive privileges tends rather to obstruct than to stimulate invention. It creates a class of speculative schemers who make it their business to watch the advancing wave of improvement, and gather its foam in the form of patented monopolies, which enable them to lay a heavy tax upon the

---

business methods are computerized, it is clear to many of us in the computer field that there are no inventions involved.")

> industry of the country, without contributing anything to the real advancement of the arts.

Id. at 200.

What has changed since Justice Bradley's day are the extremes in incentive, leverage, and opportunism that arise in the extraordinarily complex and heterogeneous environment of digital information technology. Yet Justice Bradley's insights on opportunism, failure of the disclosure principle, and costs of uncertainty foreshadowed the thickets, minefields, and ambush we speak of today: "It embarrasses the honest pursuit of business with fears and apprehensions of concealed liens and unknown liabilities to lawsuits . . . " *Id.*

A. A diminished nonobviousness standard has created a torrent of low-quality patents.

By requiring examiners to document explicitly the teaching, suggestion, or motivation to combine known elements, the suggestion test eviscerates the standard of patentability by eliminating nonobviousness in favor of a rewritten novelty standard. This has necessarily induced a flood of applications for low-quality patents.

From a conventional perspective, these individual low-quality patents appear inconsequential because they lack market power. According to Judge Giles S. Rich, who as a committee staffer drafted Section 103:

> Patents are not Nobel or Pulitzer prizes! They are not for exceptional inventors but for average inventors and should not be made hard to get. . . . Why must an invention be a commercially hot number to be patentable? If it is a total dud, how is the public injured by a patent on it?

> A monopoly on something nobody wants is pretty much of a nullity. That is one of the beauties of the patent system. The reward is measured automatically by the popularity of the contribution.

Giles S. Rich, *The Principles of Patentability*, 28 Geo. Wash. L. Rev. 393 (1960), *reprinted in* John Witherspoon, ed., *Non-Obviousness: The Ultimate Condition of Patentability*, at 2:8 (BNA 1980).

Inherent in this view of trivial patents is the assumption that the inherent value of patents is, like real property, a right to exploit. But the patent right is a right to exclude others. *eBay, Inc. v. MercExchange LLC*, 126 S. Ct. 1837, 1840 (2006) (citing 35 U.S.C. § 261). One of the dangers of a trivial patent is that it is easily overlooked, especially in the midst of tens of thousands of other trivial patents. However, a trivial patent inadvertently infringed by a valuable product may be worth a king's ransom, especially once the product is on the market and incorporated in the business activities of thousands, or millions, of users. *See, e.g.*, Ian Austen, "Court Ruling in BlackBerry Case Puts Service to U.S. Users at Risk," N.Y. Times, Oct. 8, 2005, at C3. The lure of ransom is so great that "[a]n industry has developed in which firms use patents not as a basis for producing and selling goods but, instead, primarily for obtaining licensing fees." *eBay, Inc. v. MercExchange LLC*, 126 S. Ct. at 1842 (Kennedy, J., concurring). In these industries the patent is not practiced, but instead "employed as a bargaining tool to charge exorbitant fees to companies that seek to buy licenses to practice the patent." *Id.*

A trivial mousetrap may be inconsequential, but thousands of trivial patents embedded in today's highly

complex, widely deployed, interdependent information systems represent a threat not only to the processes of innovation but to the fabric of business and commerce that is now so dependent on the use of information technology.

The USPTO has followed the Federal Circuit's lax standard in its own practice, leading to a widespread perception of declining patent quality. Growing concerns about declining quality and other systemic problems recently prompted studies by both the Federal Trade Commission and the National Research Council. *See* FTC Report, *supra* note 2; NRC Report, *supra*. The application of the threshold standard of patentability is not the only factor in determining patent quality and numbers, but the natural consequence of a lower standard is more patents. Comparison between the USPTO and the European Patent Office (EPO) for patents applied for and granted in both jurisdictions shows USPTO grant rates increasing from 20 percent higher to 40 percent higher from 1982 to 1994. OECD, *Patents and Innovation: Trends and Policy Challenges* 18-19 (2004) *available at* www.oecd.org/dataoecd/48/12/24508541.pdf. In contrast with official statistics, USPTO grant rates over 1981-2005 are as high as 95% when continuation applications are taken into account, Cecil D. Quillen, Jr. & Ogden H. Webster, *Continuing Patent Applications and the U.S. Patent and Trademark Office – Updated*, 15 Fed. Cir. B.J. 635, 661 (2006). Of a population of 70,000 applications granted by the USPTO and also applied for in the EPO and Japanese Patent Office (JPO), only 37.7% were granted by both the EPO and JPO. *See* Paul H. Jensen *et al.*, *Disharmony in International Patent Office Decisions*, 15 Fed. Cir. B.J. 679, 692 (2006). A 2005 survey of corporate members of the Intellectual Property Owners Association found that over

half thought the "quality" of issued patents was poor or less than satisfactory. Intellectual Property Owners Association, *IPO Survey: Corporate Patent Quality Perceptions in the U.S.*, Sept. 20, 2005, *available at* http://www.ipo.org/PatentQualityReport/.

It is conceivable that this phenomenon is not a result of the USPTO following the Federal Circuit, and the high grant rate is instead attributable entirely to mistakes and misplaced incentives at the USPTO – an agency whose self-described mission was, until recently, "to help customers get patents." U.S. Patent & Trademark Office, *Corporate Plan 2001*, at 23, *available at* http://www.uspto.gov/web/offices/com/corpplan/pt04.pdf. But if that were the only reason, we would expect to see high judicial findings of invalidity. Yet appellate findings of patent invalidity are less frequent since the inauguration of the Federal Circuit, thus suggesting that the Federal Circuit approves of the USPTO's high grant rate, consistent with its liberalized standard of nonobviousness. *See* William M. Landes & Richard A. Posner, *The Economic Structure of Intellectual Property Law*, at 338 (2003) (citing rise in upholding of validity from 35% pre-Federal Circuit to 67% in first ten years of Federal Circuit).

Consistent with the conclusion that the USPTO follows the Federal Circuit's lax standards, participants in joint hearings conducted by the FTC and the Department of Justice in 2002 generally perceived a reduction in the rigor of the nonobviousness standard since the advent of the Federal Circuit; they also saw the application of the "suggestion test" as a core issue in assessing nonobviousness and a focal point of current debate. FTC Report, ch. 4, at 8, 11. The FTC concluded that modification of the

suggestion test is needed. *Id.* ch. 4, at 11; Exec. Summ. at 11-12.

B. A diminished nonobviousness standard lowers the value of patents and leads to strategic portfolio racing.

Unfortunately, patent policy has been held hostage by the politics of cheap, easy-to-get patents, as represented by the "help customers get patents" mission of the USPTO. Certainly, more patents are a boon to patent professionals and to a fee-funded patent agency.[5] While it may first appear that making patents easier to get also benefits patent owners, a lax standard allows competitors to acquire more patents as well. This can work to the detriment of patents on important inventions by reducing the zone of obviousness around them and instead encouraging patents on minor variations. Initial inventors will then be required to share revenues with the improvers. FTC Report, ch. 4, at 4-5. In the long run, this raises the danger that investment will shift from creative investments that need patent protection to less socially valuable innovation where patents are not needed. *See* Glynn S. Lunney, Jr., *E-Obviousness*, 7 Mich. Telecom. & Tech. L. Rev. 363, 412 (2001).

---

[5] The USPTO benefits substantially from renewal fees since under the present revenue structure, renewals generate virtually no administrative burden but entail substantial fees. *See* 37 C.F.R. §§ 1.20(e)-(f) (2006) (approximately $6,000 over life of a single patent). This provides an incentive to grant rather than to deny patents in the expectation of future revenue from maintenance fees.

Conversely, by patenting very aggressively and securing minor variations on the initial patent, a well-resourced firm can construct a proprietary patent thicket around an invention or a set of technologies. This may not wholly preclude rivals or opportunists from filing blocking patents, but it can extend the initial patent beyond its original scope and term. This ability to extend the patent limits the practice of "designing around" and inhibits rival entry into product markets. FTC Report, ch. 4, at 5-6.

For both strategic perspectives there is a simple answer: Get more patents. From a policy perspective, this is problematic because the patent "portfolio" rather than the individual patent becomes the fundamental unit – and the implications for competition and innovation are different at the portfolio level. *See generally* R. Polk Wagner & Gideon Parchomovsky, *Patent Portfolios*, 154 U. Pa. L. Rev. 1, 52-66 (2005). "Strategic patenting" is driven by the potential value of large portfolios in defending against external patent attacks. Bronwyn H. Hall & Rosemarie H. Ziedonis, *The Patent Paradox Revisited: An Empirical Study of Patenting in the US Semiconductor Industry, 1979-95*, 32 Rand J. of Econ. 101, 107 (2001). In the IT sector, where functional complexity and sequential innovation create demand for interoperability and freedom of operation, portfolios facilitate non-exclusive cross-licensing, in effect undoing the principle of exclusivity on which conventional patent strategy and policy is premised.

Thus, weaker nonobviousness requirements are a double-edged sword that can lead to greater patenting by rivals, reduced patent value, and high transaction costs. This can mean *less* R&D activity, especially in industries that are predisposed to innovate rapidly. Robert M. Hunt, *Nonobviousness and the Incentive to Innovate: An Economic*

Analysis of Intellectual Property Reform 36-39 (Mar. 1999) (Fed. Reserve Bank of Phila. Working Paper 99-3). In the case of software, empirical research indicates that patents actually substitute for (rather than complement) investment in R&D, a result that occurs primarily in industries known for strategic patenting. James E. Bessen & Robert M. Hunt, *An Empirical Look at Software Patents* 38-40 (Mar. 2004) (Fed. Reserve Bank of Phila. Working Paper No. 03-17).

C. A diminished nonobviousness standard drives proliferation, clutter, and uncertainty, all of which increase costs.

Patent proliferation as a consequence of a permissive standard leads not only inflation but clutter – a patent landscape characterized by "thickets, minefields, royalty stacking, anti-commons, and flooding problems." FTC Report, ch. 4, at 5. These problems are exacerbated by the fact that patents are poorly defined rights. Patents are delineated by claims, but these are words and phrases with multiple definitions, especially in more abstract subject matter. There is no equivalent to the fences, fixed markers, and precision instruments of the physical world.

In the physical world, it is impossible to trespass on thousands of separately owned parcels of land at once, and property boundaries are fundamentally *bilateral* affairs addressed by hiring surveyors rather than lawyers. Intellectual property boundaries, on the other hand, are necessarily *multilateral* affairs in which one must first determine how many patents a particular product may infringe. There may be thousands of virtual boundaries to be located and evaluated. The cost depends on the number of functions or components to be cleared and the number

of relevant patents found and evaluated. Producers face an average of $13,182 for each validity/invalidity opinion (including evaluating obviousness) and $11,670 per infringement/non-infringement opinion. AIPLA, *Report of the Economic Survey* at I-101 (2005). For a product with thousands of functions in an environment where patents are easy to get, full clearance searches quickly become impractical.[6]

The Federal Circuit's suggestion test compounds the problem. When all combinations of known elements are presumed patentable, as the suggestion test requires, permutations of functions and components must be cleared as well – in theory if not in practice. Even simple combinations of the two known elements, such as conducting reverse auctions on the Internet, must be presumed patentable absent a showing of teaching, suggestion, or motivation to combine.

D. A diminished nonobviousness standard promotes opportunistic behavior.

A landscape cluttered with vast numbers of questionable and low-quality patents inevitably leads to too much

---

[6] The figures above do not include the costs of searching for relevant patents in the first instance, and they must be multiplied when multiple relevant patents are found for a given function or component. *See Competition, Economic, and Business Perspectives on Substantive Patent Law Issues: Non-Obviousness and Other Patentability Criteria: Hearing Before the Federal Trade Commission* 81 (Oct. 30, 2002) ("[T]here are too many patents to be able to even locate which ones are problematic. I used to say only IBM does clearance . . . but IBM tells me even they don't do clearance searches anymore.") (statement of Robert Barr, Worldwide Patent Counsel, Cisco Systems) *available at* http://www.ftc.gov/opp/intellect/021030trans.pdf.

information and therefore failure of the disclosure function at the aggregate level.[7] *See generally* Note, *The Disclosure Function of the Patent System (or Lack Thereof)*, 118 Harv. L. Rev. 2007 (2005). This failure at an aggregate level creates a fertile breeding ground for those who can take advantage of opacity and uncertainty. In an environment characterized by defensive portfolio building and cross-licensing among major producers, the big winners are not the producers, who are in effect using defensive portfolios and cross-licensing to contractually avoid the exclusivity of patents. The big winners are patent holders who are not engaged in production, distribution, and use of the technology, and therefore have no vulnerability to patents of others. These non-producing entities are free to ambush companies that have made large investments in developing and marketing products that inadvertently infringe on unforeseen patents. *See* FTC Report, ch. 2, at 31.

The recently popularized term "troll," is often used to describe non-producing companies or individuals that assert questionable patents against producers. *Id.* n. 220. The term "troll" is convenient shorthand for arbitrageurs that benefit from low standards and large numbers of

---

[7] *Business Perspectives on Patents – Software and the Internet: Hearing Before the Federal Trade Commission* 411-12 (Feb. 27, 2002) ("In the software industry . . . the number of overbroad patent claims allowed by the USPTO, the uncertainty in the current patent process going through, and particularly the uncertainty in the judicial process post-grant, all combine to increase the difficulties and inaccuracies of the endeavor of trying to use that information in a competitive manner, because there's too much information and it is no longer meaningful in the same way as it might be in other industries, which might seem irrational.") (statement of Bradford L. Friedman, Director of Intellectual Property, Cadence Design Systems, Inc.) *available at* http://www.ftc.gov/opp/intellect/020227trans.pdf.

patents, uncertainty in patent scope and validity, and the ease of asserting questionable patents because of the high presumption of patent validity accorded by the Federal Circuit. *See American Hoist & Derrick Co.*, 725 F.2d at 1368 (establishing standard of validity). Trolls thrive on a business model of "being infringed." *See* Markus G. Reitzig et al., *On Sharks, Trolls, and Other Patent Animals – 'Being Infringed' as a Normatively Induced Innovation Exploitation Strategy*, Feb. 2006 (working paper) *available online at* http://ssrn.com/abstract=885914.

These arbitrageurs benefit from their ability to inflict disproportionate harm on producers who have inadvertently incorporated patented functions into complex mass-marketed products. If such an entity can trip up the industry standards that are so critical in information technology, they can levy a tax on an entire industry. Thus, Justice Bradley's admonition 125 years ago in *Atlantic Works, supra*, describes equally well today the extremes in opportunity, incentive, and leverage that arise for "speculative schemers" in digital information technology. Nowhere is this more apparent than in the field of software where the creation of patentable functionality is open to millions of innovative individuals worldwide and where billions of users worldwide depend on the same industry standards to communicate and to share information and knowledge.

Under the Federal Circuit's jurisprudence, the millions of functions performed by computers for any conceivable purpose – personal, commercial, manufacturing, governmental, or otherwise – are potentially patentable. Under the Federal Circuit's suggestion test, every combination, every permutation of these functions, novel or not, is presumptively nonobvious. This encourages not only

excessive patenting but excessive claiming within patents as applicants weave a web that is too complex for examiners to research.[8] It creates a patent landscape too dense to navigate deliberately, putting at risk all but the most unadventurous and timid innovators.

CONCLUSION

For the foregoing reasons, CCIA respectfully urges this Court to reverse the Federal Circuit's holding and conform the Federal Circuit's jurisprudence on non-obviousness to the prior rulings of this Court.

Respectfully submitted,

BRIAN KAHIN
MATTHEW SCHRUERS
COMPUTER & COMMUNICATIONS INDUSTRY ASSOCIATION
666 Eleventh Street, NW
Washington, DC 20001
(202) 783-0070

JONATHAN BAND
Counsel of Record
JONATHAN BAND PLLC
21 Dupont Circle, NW
8th Floor
Washington, DC 20036
(202) 296-5675
jband@policybandwidth.com

Counsel for Amicus Curiae

Dated: August 22, 2006

[8] The average number of claims per patents in a representative sample increased 50% from 9.94 in 1976-78 to 14.87 in 1996-98. John R. Allison & Mark A. Lemley, *The Growing Complexity of the United States Patent System*, 82 B.U.L. Rev. 77, 103 (2002). Continued expansion of claims has prompted a USPTO proposal to limit initial examination of claims in a patent application to no more than claims deemed as "representative" by the applicant. *Changes to Practice for the Examination of Claims in Patent Applications*, 71 Fed. Reg. 61, 62 (Jan. 3, 2006).

557I

(18)

No. 04-1350

Supreme Court, U.S.
FILED
AUG 2 2 2006
OFFICE OF THE CLERK

In The Supreme Court of the United States

KSR INTERNATIONAL CO.,

Petitioner,

v.

TELEFLEX INC. and
TECHNOLOGY HOLDING CO.,

Respondents.

On Writ Of Certiorari To The United States Court Of Appeals For The Federal Circuit

BRIEF OF ECONOMISTS AND LEGAL HISTORIANS AS *AMICI CURIAE* IN SUPPORT OF PETITIONER

August 22, 2006

JOSHUA D. SARNOFF*
GLUSHKO-SAMUELSON
INTELLECTUAL PROPERTY
LAW CLINIC
WASHINGTON COLLEGE OF LAW
AMERICAN UNIVERSITY
4801 Massachusetts Avenue, NW
Washington, DC 20016
(202) 274-4165

**Counsel of Record*
for Amici Curiae
Economists and Legal Historians

COCKLE LAW BRIEF PRINTING CO. (800) 225-6964
OR CALL COLLECT (402) 342-2831

TABLE OF CONTENTS

Page

TABLE OF CONTENTS i

TABLE OF AUTHORITIES ii

INTEREST OF THE *AMICI CURIAE* 1

SUMMARY OF THE ARGUMENT 1

ARGUMENT 3

I. This Court Historically Has Imposed a Substantial Threshold of Technological Creativity for the Patentablity of New Inventions 3

II. The *Graham* Approach to Determining Patentability is Sound, But Requires Further Clarification for Its Proper Understanding and Application by the Patent Office and the Courts 15

III. The Court Should Clarify the Burdens of Production and Proof Regarding the *Graham* Factors 28

CONCLUSION 30

TABLE OF AUTHORITIES

Page

CASES

Altoona Publix Theaters, Inc. v. Am. Tri-Ergon Corp., 294 U.S. 477 (1935) 11, 13

Ames v. Howard, 1 F. Cas. 755 (C.C.D. Mass. 1833) 7

Anderson's-Black Rock, Inc. v. Pavement Salvage Co., 396 U.S. 57 (1969) 14

Animal Legal Def. Fund v. Quigg, 932 F.2d 920 (Fed. Cir. 1991) 22

Atl. Works v. Brady, 107 U.S. 192 (1883) 9, 10, 16

Bean v. Smallwood, 2 F. Cas. 1142 (C.C.D. Mass. 1843) 7

Brown v. Piper, 91 U.S. 37 (1875) 4

Cochrane v. Deener, 94 U.S. 780 (1876) 4

Concrete Appliances Co. v. Gomery, 269 U.S. 177 (1925) 13, 18, 19, 25

Corning v. Burden, 56 U.S. (15 How.) 252 (1853) 30

Cuno Eng. Corp. v. Automatic Devices Corp., 314 U.S. 84 (1942) 11, 14

Dann v. Johnston, 425 U.S. 219 (1976) 26

Densmore v. Scofield, 102 U.S. 375 (1880) 14

Dunbar v. Myers, 94 U.S. 187 (1876) 9, 26

Earle v. Sawyer, 8 F. Cas. 254 (C.C.D. Mass. 1825) 6, 14

Electric Cable Joint Co. v. Brooklyn Edison Co., 292 U.S. 69 (1934) 11

Evans v. Eaton, 8 F. Cas. 846 (C.C.D. Pa. 1816), *rev'd on other grounds*, 16 U.S. (3 Wheat.) 454 (1818) 5

TABLE OF AUTHORITIES – Continued

Page

Evans v. Eaton, 20 U.S. 356 (1822) 5

Florsheim v. Shilling, 137 U.S. 64 (1890) 11

Graham v. John Deere Co., 383 U.S. 1 (1966) ..... *passim*

Great Atl. & Pac. Tea Co. v. Supermarket Equip. Corp., 340 U.S. 147 (1950) 10, 12, 13

Hailes v. Van Wormer, 87 U.S. (20 Wall.) 353 (1873) 9

Hollister v. Benedict Mfg. Co., 113 U.S. 59 (1885) 11

Honolulu Oil Corp. v. Halliburton, 306 U.S. 550 (1939) 12

Hotchkiss v. Greenwood, 52 U.S. (11 How.) 248 (1851) ..... *passim*

Hovey v. Stevens, 12 F. Cas. 609 (C.C.D. Mass. 1846) 8

Howe v. Abbott, 12 F. Cas. 656 (C.C.D. Mass. 1842) 7

Hybritech Inc. v. Monoclonal Antibodies., Inc., 802 F.2d 1367 (Fed. Cir. 1986) 22

In re Antonie, 449 F.2d 618 (C.C.P.A. 1977) 18

In re Clay, 966 F.2d 656 (Fed. Cir. 1992) 26

In re Henze, 181 F.2d 196 (C.C.P.A. 1950) 29

In re Kahn, 441 F.3d 977 (Fed. Cir. 2006) 24, 25, 26

In re Piasecki, 745 F.2d 1468 (Fed. Cir. 1984) 28, 29

In re Sang Su Lee, 277 F.3d 1338 (Fed. Cir. 2002) 25

In re Surrey, 319 F.2d 233 (C.C.P.A. 1963) 29

In re Tomlinson, 363 F.2d 928 (C.C.P.A. 1932) 18

In re Warner, 379 F.2d 1011 (C.C.P.A. 1967) 28

TABLE OF AUTHORITIES – Continued

Page

Laboratory Corp. of Am. Holdings v. Metabolite Labs., Inc., 126 S.Ct. 2921 (2006) 3

Lincoln Eng. Co. of Ill. v. Stewart-Warner Corp., 303 U.S. 545 (1938) 14, 15

Marconi Wireless Telegraph Co. of Am. v. United States, 320 U.S. 1 (1943) 25

Merck & Co., Inc. v. Kessler, 80 F.3d 1543 (Fed. Cir. 1996) 22

Novo Industri A/S v. Travenol Labs., Inc., 677 F.2d 1202 (7th Cir. 1982) 18

O'Reilly v. Morse, 56 U.S. (15 How.) 62 (1853) 4

Parker v. Flook, 437 U.S. 584 (1978) 3

Pearce v. Mulford, 102 U.S. 112 (1880) 11

Penn. R. Co. v. Locomotive Eng. Safety Truck Co., 110 U.S. 490 (1884) 11, 24

Powers-Kennedy Contracting Corp. v. Concrete Mixing & Conveying Co., 282 U.S. 175 (1930) 12

Princeton Biochemicals, Inc. v. Beckman Coulter, Inc., 411 F.3d 1332 (Fed. Cir. 2005) 26

Pro-Mold & Tool Co. v. Great Lakes Plastics, Inc., 75 F.3d 1568 (Fed. Cir. 1996) 11

Reckendorfer v. Faber, 92 U.S. 347 (1875) 9

Sakraida v. Ag Pro, Inc., 425 U.S. 273 (1976) 13, 15

Saranac Automatic Mach. Corp. v. Wirebound Patents Co., 282 U.S. 704 (1931) 11, 12

Smith v. Goodyear Dental Vulcanite Co., 93 U.S. 486 (1876) 23

TABLE OF AUTHORITIES – Continued

Page

Smith v. Nichols, 88 U.S. (21 Wall.) 112 (1874) 9

Stratoflex, Inc. v. Aeroquip Corp., 713 F.2d 1530 (Fed. Cir. 1983) 27

Tec Air, Inc. v. Denso Mfg. Mich. Inc., 192 F.3d 1353 (Fed. Cir. 1999) 11

Teleflex Inc. v. KSR Int'l, Inc., 119 Fed. Appx. 282 (Fed. Cir. 2005) 11, 23, 26

Textile Mach. Works v. Louis Hirsch Textile Mach., 302 U.S. 490 (1938) 11, 12

The Packing Company Cases, 105 U.S. 566 (1881) 11

Toledo Pressed Steel Co. v. Standard Parts, 307 U.S. 350 (1939) 12, 27, 28

United States v. Adams, 383 U.S. 39 (1966) 18, 19, 20, 27, 30

Webster Loom Co. v. Higgens, 105 U.S. 580 (1881) 23

Whittemore v. Cutter, 29 F. Cas. 1123 (C.C.D. Mass. 1813) 6, 7

Wyeth v. Stone, 30 F. Cas. 723 (C.C.D. Mass. 1840) 4

Washburn & Moen Mfg. Co. v. Beat 'Em All Barbed-Wire Co. (the Barbed Wire patent), 143 U.S. 275 (1892) 22, 23, 24

CONSTITUTION AND STATUTES

U.S. Const., Art. I, § 8, cl. 8 3

Act of April 10, 1790, ch. 7, § 1, 1 Stat. 109, 110 3

Act of Feb. 21, 1793, ch. 11, § 1, 1 Stat. 318, 318 5

Act of Feb. 21, 1793, ch. 11, § 2, 1 Stat. 318, 321 5

TABLE OF AUTHORITIES – Continued

Page

Act of July 4, 1836, ch. 357, § 1, 5 Stat. 117, 117 ..... 7, 8

Act of July 4, 1836, ch. 357, § 2, 5 Stat. 117, 118 5

Act of July 19, 1952, ch. 950, § 103, 66 Stat. 792, 798 ..... 13, 14

35 U.S.C. § 100(b) 4

35 U.S.C. § 103 ..... *passim*

35 U.S.C. § 131 21

35 U.S.C. § 282 29

35 U.S.C.A § 131 revision note (1954) 3

GOVERNMENTAL MATERIALS

Chief Judge Paul R. Michel, "The State of the Court" (Federal Circuit Bar Association Annual Conference, June 29, 2006, revised July 10, 2006), *available* at http://www.fedcir.gov/speech.pdf (last visited Aug. 9, 2006) 19

Manual of Patent Examining Procedure § 2144.06 (8th ed. Rev. 3 2005) 24

Manual of Patent Examining Procedure § 2143.01 (8th ed. Rev. 3 2005) 24

S. REP. NO. 82-1979 (1952) 4

S. REP. NO. 24-338 (1836) 7

U.S. Federal Trade Commission, To Promote Innovation: The Proper Balance of Competition and Patent Law and Policy (Oct. 2003), *available* at http://www.ftc. gov/os/2003/10/innovationrpt.pdf (last visited Aug. 9, 2006) 22, 28

TABLE OF AUTHORITIES – Continued

Page

OTHER

John H. Barton, *Non-Obviousness,* 43 IDEA 475 (2003) 15, 16, 23, 24, 28

John H. Barton, *Reforming the Patent System,* 287 Science 1933 (2000) 10

Greg Blonder, Cutting Through the Patent Thicket; The current U.S. system is harming innovation. A simplified process with stronger patents would encourage economic growth, Business Week Online (Dec. 20, 2005) 19

Wesley M. Cohen et al., Protecting Their Intellectual Assets: Appropriability Conditions and Why U.S. Manufacturing Firms Patent (or Not) (Natl. Bureau of Econ. Research Working Paper No. W7552, Feb. 2000), *available* at http://www.nber.org/papers/w7552, last visited Aug. 9, 2006) 15, 16

John F. Duffy & Robert P. Merges, *The Story of* Graham v. John Deere Company: *Patent Law's Evolving Standard of Creativity,* in Intellectual Property Stories (Jane C. Ginsberg & Rochelle C. Dreyfuss eds. Foundation 2006) 9, 16, 17

Harold I. Dutton, The patent system and inventive activity during the industrial revolution 1750-1852 (Manchester U. Press 1984) 8

Niles Eldredge, Darwin, Discovering the Tree of Life (W.W. Norton & Co. 2005) 26

Matthew D. Henry & John L. Turner, *The Court of Appeals for the Federal Circuit's Impact on Patent Litigation,* 35 J. Legal Stud. 85 (2006) 29

TABLE OF AUTHORITIES – Continued

Page

Robert M. Hunt, Federal Reserve Bank of Philadelphia, Nonobviousness and the Incentive to Innovate: An Economic Analysis of Intellectual Property Reform, Working Paper No. 99-3 (Mar. 1999) 9, 10

Thomas Jefferson, Letter to Isaac MacPherson (Aug. 13, 1813), *reprinted in* The Portable Thomas Jefferson (Merrill D. Peterson ed. Penguin Books 1975) 4, 5, 22

B. Zorina Khan, *Property Rights and Patent Litigation in Early Nineteenth-Century America,* 55 J. Econ. Hist. 58 (1995) 9

Edmund Kitch, *Graham v. John Deere Co.: New Standards for Patents,* 1966 Sup. Ct. Rev. 293 15

Steven Lubar, *The Transformation of Antebellum Patent Law,* 32 Tech. and Culture 932 (1991) 7

Robert P. Merges, *Commercial Success and Patent Standards: Economic Perspectives on Innovation,* 76 Cal. L. Rev. 803 (1988) 27

Robert P. Merges, *Uncertainty and the Standard of Patentability,* 7 High Tech L.J. 1 (1992) 17

Joel Mokyr, *Why Was the Industrial Revolution a European Phenomenon,* 10 Sup. Ct. Econ. Rev. 27 (2003) 25, 26

Robert C. Post, *"Liberalizers" versus "Scientific Men" in the Antebellum Patent Office,* 17 Tech. and Culture 24 (1976) 7, 8

Giles S. Rich, *The Principles of Patentability,* 42 J. Pat. Off. Soc'y 75 (1960) 3, 16, 27

TABLE OF AUTHORITIES – Continued

Page

John Schlicher, Patent Law: Legal and Economic Principles (West 1992) 15

John R. Thomas, *The Patenting of the Liberal Professions*, 40 B.C. L. Rev. 1139 (1999) 3

Edward C. Walterscheid, *Patents and Manufacturing in the Early Republic*, 80 J. Pat. & Trademark Off. Soc'y 855 (1998) 7

Edward C. Walterscheid, *The Hotchkiss Unobviousness Standard: Early Judicial Activism in the Patent Law*, 13 J. Intell. Prop. L. 103 (2005) 4, 5, 6, 10

Edward C. Walterscheid, *The Use and Abuse of History: The Supreme Court's Interpretation of Thomas Jefferson's Influence on Patent Law*, 39 IDEA 195 (1999) 5

Edward C. Walterscheid, *To Promote the Progress to Useful Arts: American Patent Law and Administration*, 1787-1836 (Part I), 79 J. Pat. & Trademark Off. Soc'y 61 (1997) 5

Email from Edward C. Walterscheid to Joshua D. Sarnoff (Aug. 21, 2006) 10

INTEREST OF THE *AMICI CURIAE*

This brief is filed on behalf of the Economists and Legal Historians identified in Appendix A (Historians).[1] Historians teach and write about technological development and United States patent laws. Historians are concerned that the standards currently applied to determine obviousness by the U.S. Court of Appeals for the Federal Circuit (Federal Circuit), and thus by the U.S. Patent and Trademark Office (Patent Office), conflict with historic standards of this Court. The Court's standards have required new inventions to make a substantial technological contribution to the art in order to be patentable, and thus have helped to assure technological progress in the United States. By reviewing the history of the obviousness standard, Historians hope to assist the Court in re-establishing appropriate thresholds of technological creativity and in providing guidance for the Patent Office and courts to determine which new inventions warrant patents.

SUMMARY OF THE ARGUMENT

The Patent Office originally and this Court subsequently articulated a substantial technological threshold for the level of inventive contribution that warrants the grant of a patent. The Court later held this threshold to be a constitutional requirement. Otherwise, patents would withdraw from unrestricted use inventions that the public already constructively possessed and would thereby retard rather than promote technological progress. Before

---

[1] Petitioner's and Respondents' letters of consent have been filed with the Clerk. This brief was not authored in whole or in part by counsel for any party. No one other than *Amici* and their counsel made a monetary contribution to preparing or submitting this brief.

1952, the Court repeatedly held: that new inventions (particularly combinations of prior art elements) were unpatentable even though they had not been contemplated in the art; that circumstantial evidence of technological creativity must be evaluated with care; and that exogenous changes in technology would predictably trigger rapid creation of new inventions. Congress ratified the Court's precedents on the inventive threshold in 1952, when codifying the obviousness standard in Section 103 of the Patent Act.

In *Graham v. John Deere Co.*, 383 U.S. 1 (1966), the Court articulated the purpose of the obviousness standard – to limit patents to inventions that would not have been made but for the patent incentive – and specified a methodology for applying it. Additional guidance is needed, however, for proper understanding and application of the standard. Historians suggest that the Court restate the purpose of the standard as to prohibit patents on inventions that could have been made within a reasonable period of time and within reasonable budgetary constraints. This restatement clarifies that the *Graham* methodology mandates an inquiry requiring both technical expertise and policy judgment. The proposed restatement will lead over time to more reasoned analysis by the Patent Office and the courts. In contrast, the current standards being applied by the Patent Office and the Federal Circuit – particularly the teaching, suggestion, or motivation to combine test created by the Federal Circuit and applied in this case – conflict with the Court's jurisprudence, are applied without sufficient sensitivity to the technological context at a particular time, and permit patents to issue and to be held valid for insignificant contributions to the art.

Historians further suggest that the Court clarify the proper allocation of burdens of production and proof of

obviousness. Given the limited resources of the Patent Office, the current allocation may often lead to erroneous results. At a minimum, the Court should clarify that to assess obviousness, no evidentiary burden exists to document a teaching, suggestion, or motivation to combine the prior art.

ARGUMENT

I. This Court Historically Has Imposed a Substantial Threshold of Technological Creativity for the Patentability of New Inventions

The 1790 Patent Act required the Patent Office to review applications to determine if the disclosed "invention or discovery [was] sufficiently useful and important" to warrant granting a patent. *See* Act of April 10, 1790, ch. 7, § 1, 1 Stat. 109, 110.[2] Since 1790, this Court has refused to grant or has invalidated patents unless the new technological "invention"[3] for which exclusive rights were sought resulted from substantial technological creativity. The

---

[2] Congress retained this language in the Patent Act until 1952, when it was eliminated as "'unnecessary'" in light of the newly codified obviousness standard. Giles S. Rich, *The Principles of Patentability*, 42 J. Pat. Off. Soc'y 75, 80-81 (1960) (quoting 35 U.S.C.A. § 131 revision note (1954)).

[3] Historians refer to all novel creations and combinations as inventions although many cases treated only those that were patentable as inventions. Further, "inventions" or "discoveries" may not be patentable unless they are within the "useful Arts." U.S. Const., Art. I, § 8, cl. 8. *See Parker v. Flook*, 437 U.S. 584, 593 (1978) (assessment of the type of discovery must precede determination of novelty and obviousness). *Cf. Laboratory Corp. of Am. Holdings v. Metabolite Labs., Inc.*, 126 S.Ct. 2921 (2006) (dismissing as improvidently granted a subject matter challenge to a patented claim). *See generally* John R. Thomas, *The Patenting of the Liberal Professions*, 40 B.C. L. Rev. 1139, 1163-75 (1999) (discussing historic understanding of the "technological arts").

Court in this case has the opportunity to affirm this fundamental premise.

As this Court recognized in *Graham*, the three-person Patent Board under the 1790 Patent Act had created rules that categorically excluded certain types of novel inventions from being considered patentable. *See* 383 U.S. at 9, 10 & n.3 (application of a machine to a new use;[4] changes in the material of construction; changes of form; and use of previously known implements in combination).[5] The premise of these rules was that the public constructively possessed novel inventions that were within the skill in the art to create or to apply, and thus public rights to use such inventions should not be taken away by legislative grants of exclusive rights. *See* Thomas Jefferson, Letter to Isaac MacPherson (Aug. 13, 1813), *reprinted in* The Portable Thomas Jefferson at 531 (Merrill D. Peterson ed. Penguin Books 1975) (Jefferson, Letter) ("[T]his right [to use] ought not to be taken from him and given to a monopolist, because the first perhaps had occasion so to apply it."); *Brown v. Piper*, 91 U.S. 37, 41 (1875) (inventions "within the circle of what was well known before . . . belonged to the public"). This premise followed from the lack of natural rights in inventions and the limited power

---

[4] This Court originally prohibited patents for processes and later permitted new-use patents and patents on processes. *Compare Wyeth v. Stone*, 30 F. Cas. 723, 727 (C.C.D. Mass. 1840), *and O'Reilly v. Morse*, 56 U.S. (15 How.) 62, 112-13 (1853), *with Cochrane v. Deener*, 94 U.S. 780, 787 (1876). Congress subsequently ratified patents for new uses of existing inventions. *See* 35 U.S.C. § 100(b) ("process . . . includes a new use of a known process, machine"); S. REP. NO. 82-1979, at 6 (1952) (discussing the process definition).

[5] *See also* Edward C. Walterscheid, *The Hotchkiss Unobviousness Standard: Early Judicial Activism in the Patent Law*, 13 J. Intell. Prop. L. 103, 107-08 (2005) (Walterscheid, *Hotchkiss*).

vested in Congress. *See id.*; *Graham*, 383 U.S. at 5-6 (Congress may neither "enlarge the patent monopoly without regard to the innovation, advancement or social benefit gained thereby" nor "authorize the issuance of patents whose effects are to remove existent knowledge from the public domain, or to restrict free access to materials already available.").

Jefferson also thought that the expertise of the Patent Office, rather than of courts, was best suited to develop the principles for determining the threshold of creativity that warranted granting exclusive rights. *See* Jefferson, Letter, *supra,* at 532. Jefferson was particularly concerned that the grant of unjustified patents would result in "harassment by lawsuits." *Id.* Jefferson's views on patent laws, however, were controversial.[6]

Congress did not at first follow Jefferson's advice, as it eliminated the examination system in the 1793 Patent Act. *See* Act of Feb. 21, 1793, ch. 11, § 1, 1 Stat. 318, 318.[7] The

---

[6] *See generally* Edward C. Walterscheid, *The Use and Abuse of History: The Supreme Court's Interpretation of Thomas Jefferson's Influence on Patent Law,* 39 IDEA 195 (1999).

[7] *See* Edward C. Walterscheid, *To Promote the Progress to Useful Arts: American Patent Law and Administration, 1787-1836 (Part I),* 79 J. Pat. & Trademark Off. Soc'y 61, 72-74 (1997) (describing the transition from an examination to a registration system based on the English patent system). Congress did agree that "simply changing the form or the proportions . . . in any degree, shall not be deemed a discovery." Act of Feb. 21, 1793, ch. 11, § 2, 1 Stat. 318, 321. *See Evans v. Eaton,* 8 F. Cas. 846, 852 (C.C.D. Pa. 1816) (the requirement limited patentability to changes in "principles" of invention), *rev'd on other grounds,* 16 U.S. (3 Wheat.) 454 (1818); *Evans v. Eaton,* 20 U.S. 356, 431 (1822) (same). *See* Walterscheid, *Hotchkiss, supra,* at 108-15 (discussing doctrinal changes resulting from this language). In 1836, Congress eliminated this provision, but the Court continued to invalidate patents that had issued for such inventions. *See id.* at 116; Act of July 4, 1836, ch. 357, § 2, 5 Stat. 117, 118.

federal courts thus took up the task of elaborating the required threshold of technological creativity that warranted the grant of a patent.[8] Like Congress, the courts did not adopt Jefferson's views wholesale.

For example, in *Earle v. Sawyer,* 8 F. Cas. 254 (C.C.D. Mass. 1825), Justice Story upheld a patent for an improved machine for sawing shingles, which substituted a circular saw for a perpendicular saw. Justice Story rebuffed the defendant's "metaphysical" argument that the invention was unpatentable without creative ingenuity. *Id.* at 255. Moreover, he rejected the entire argument that:

> [an inventor] must find [the invention] out by mental labor and intellectual creation. If the result of accident, it must be what would not occur to all persons skilled in the art, who wished to produce the same result. There must be some addition to the common stock of knowledge, and not merely the first use of what was known before. . . . The mere putting of two things together, although never done before, is no invention.

Id. Nevertheless, even Justice Story agreed that not all new inventions were patentable. In *Whittemore v. Cutter,* 29 F. Cas. 1123 (C.C.D. Mass. 1813), Justice Story held that a new use of an existing machine or its combination with other existing machines was not, without more, a patentable invention. "[F]or if the different effects were all produced by the same application of machinery, in separate parts, and he merely combined them together, or

---

[8] *Cf.* Walterscheid, *Hotchkiss, supra,* at 105, 126-32 (arguing that such judicial elaboration reflected activism that was not authorized by the statute, but that Congress ultimately ratified the Court's precedents in the 1952 Act).

added a new effect, such combination would not sustain the present patent. . . ." *Id.* at 1124.[9]

By 1836, Congress repented its earlier decision to register patents. Congress adopted an examination system to prevent the widespread issuance of invalid patents that had resulted in unjustified litigation and destruction of businesses. *See* Act of July 4, 1836, ch. 357, § 1, 5 Stat. 117, 117.[10] "Almost 10,000 patents were issued under [the 1793 Act], the majority of which were either for useless inventions or used to fraudulently impose on the public."[11] But effective examination would require the hiring of highly qualified examiners, who would be familiar with existing knowledge and technologies in the various arts in which patents were sought. *See* S. Rep. No. 24-338, at 4 (1836). Congress did not provide sufficient funds to pay required salaries, and examiners needed too much time to research prior art. Thus, although trained examiners became increasingly rigid in evaluating patentability, patent quality suffered and significant backlogs in processing developed.[12]

---

[9] *See also Bean v. Smallwood*, 2 F. Cas. 1142, 1142 (C.C.D. Mass. 1843); *Howe v. Abbott*, 12 F. Cas. 656, 658 (C.C.D. Mass. 1842); *Ames v. Howard*, 1 F. Cas. 755, 757 (C.C.D. Mass. 1833).

[10] *See also* S. REP. NO. 24-338, at 1-8 (1836) (discussing the statutory provisions, changes in the economy that had made the patent system more important, and the need to "arrest injury and injustice at the threshold"); Steven Lubar, *The Transformation of Antebellum Patent Law*, 32 Tech. and Culture 932, 941 (1991) (discussing the issuance and effects of patents under the 1793 Act).

[11] Edward C. Walterscheid, *Patents and Manufacturing in the Early Republic*, 80 J. Pat. & Trademark Off. Soc'y 855, 886 (1998).

[12] *See, e.g.*, Robert C. Post, *"Liberalizers" versus "Scientific Men" in the Antebellum Patent Office*, 17 Tech. and Culture 24, 33, 37-39 (1976); Lubar, *supra*, at 945. Following a political campaign against rigid examination, scientists were replaced by political appointees who

(Continued on following page)

Pre-1850 examination practice under the American system was perceived abroad as "'a miserable failure.'"[13]

In this context, the Supreme Court decided *Hotchkiss v. Greenwood,* 52 U.S. (11 How.) 248 (1851). The case addressed a novel combination of prior art elements. The inventor had substituted known clay and porcelain door knobs for common iron knobs, employing a dovetail to secure the shank. The plaintiffs requested a jury instruction that clay knobs and shanks in the prior art had not been combined earlier and that the attachment required skill and invention to achieve the useful result (better functioning and cheaper manufacturing). *See id.* at 264. The Court upheld the trial court's actual instruction that, if the same form and purposes of knobs and attachments were known, if clay was simply substituted for metal, and if "no more ingenuity or skill [were] required to construct the knob in this way than that possessed by an ordinary mechanic acquainted with the business," then there was no patentable invention and the issued patent was invalid. *Id.* at 265.[14]

The Court rejected the argument that substitution of materials – even if it makes an invention "better and cheaper" to manufacture – makes for a patentably distinct invention. *Id.* at 266. "The difference is formal, and destitute of ingenuity or invention. It may afford evidence of judgment and skill in the selection and adaptation of the

---

lowered examination standards, fueling an explosion in patenting beginning in the 1850s. *See* Post, *supra*, at 39-52.

[13] Harold I. Dutton, The patent system and inventive activity during the industrial revolution 1750-1852 61 (Manchester U. Press 1984) (citation omitted).

[14] At least one lower court had interpreted the 1836 Act to preclude patents on new combinations that were "a very obvious change to any mechanic." *Hovey v. Stevens,* 12 F. Cas. 609, 612 (C.C.D. Mass. 1846).

materials in the manufacture of the instrument for the purposes intended, but nothing more." *Id.* The Court also rejected the argument that there were unique advantages to the particular combination. *See id.* at 266-67 (noting that even if the fastening produced "a new and peculiar effect" having various benefits, the effect would be achieved by other available materials). As the Court later affirmed in *Reckendorfer v. Faber,* 92 U.S. 347 (1875), to be patentable "the results must be the product of the combination, not a mere aggregate of several results, each the complete product of one of the combined elements." *Id.* at 353 (citing *Hailes v. Van Wormer,* 87 U.S. (20 Wall.) 353 (1873)). *See also Dunbar v. Myers,* 94 U.S. 187, 199 (1876) (change of "form, proportions, or degree, or the substitution of equivalents," does not make an invention patentable, even though they "may produce better results") (citing *Smith v. Nichols,* 88 U.S. (21 Wall.) 112, 115 (1874)).

Hotchkiss was decided during a period of remarkable technological change, when invention and innovation were highly valued.[15] The Court's holding should be no surprise, as the justification for a high creative threshold "rests in part on the existence of change in social needs, conditions and technology . . . [and] should be less important in a static society or one experiencing only very gradual change."[16] In *Atlantic Works v. Brady,* 107 U.S. 192 (1883),

---

[15] *See, e.g.,* B. Zorina Khan, *Property Rights and Patent Litigation in Early Nineteenth-Century America,* 55 J. Econ. Hist. 58, 70-71 (1995) (also noting changing judicial attitudes over the course of the 19th Century).

[16] John F. Duffy & Robert P. Merges, *The Story of* Graham v. John Deere Company: *Patent Law's Evolving Standard of Creativity,* in Intellectual Property Stories at 114 (Jane C. Ginsberg & Rochelle C. Dreyfuss eds. Foundation 2006). *See* Robert M. Hunt, Federal Reserve Bank of Philadelphia, Nonobviousness and the Incentive to Innovate: An Economic Analysis of Intellectual Property Reform, Working Paper

(Continued on following page)

Justice Bradley provided a detailed conceptual justification for setting the threshold of technological contribution above "ordinary mechanical or engineering skill," which precluded patents on inventions that "would naturally and spontaneously occur. . . ." *Id.* at 200. Otherwise, "[s]uch an indiscriminate creation of exclusive privileges tends rather to obstruct than to stimulate invention. It creates a class of speculative schemers . . . [who anticipate improvements and use their patent monopolies] to lay a heavy tax upon the industry of the country, without contributing anything to the real advancement of the art." *Id.* *See id.* (such patents "embarrass[] the honest pursuit of business with fears and apprehensions of concealed liens and unknown liabilities to lawsuits and vexatious accountings for profits made in good faith"); *Great Atl. & Pac. Tea Co. v. Supermarket Equip. Corp.*, 340 U.S. 147, 152-53 (1950) (patents on combinations of "old elements with no change in their respective functions" withdraw "what already is known into the field of its monopoly and diminish[] the resources available to skillful men."). The Court in *Graham* therefore treated the prohibition of patents on obvious inventions as a constitutional requirement. *See* 383 U.S. at 6.[17]

No. 99-3 (Mar. 1999) (explaining how reducing nonobviousness requirements can lead to reductions in research and development activity, particularly in rapidly innovating industries). *Cf.* John H. Barton, *Reforming the Patent System*, 287 Science 1933, 1933 (2000) (limiting patents on minor inventions reduces patent system costs "without any effect on the incentives provided for more important innovation").

[17] *But cf.* Walterscheid, *Hotchkiss*, *supra*, at 124-26 (arguing that the Court in *Graham* interpreted the Constitution to impose a requirement of inventive contribution beyond novelty, but did not justify the obviousness standard on this requirement). Mr. Walterscheid believes, however, that the Constitution does require such a prohibition and that *Graham* should have been decided on this basis. Email from Edward C. Walterscheid to Joshua D. Sarnoff (Aug. 21, 2006).

In the second half of the 19th Century and the first half of the 20th Century, the Court solidified its decisions on the high inventive threshold for patentability, repeatedly holding that significant technological creativity was required above the ordinary skill in the art (as reflected by a substantial change to prior art applications or functions).[18] The fact that the "new form of result ha[d] not before been contemplated" (what the Federal Circuit has characterized as a teaching, suggestion, or motivation to combine the prior art[19]) did not suffice for patentability. *Penn. R. Co.*, 110 U.S. at 494. Even without prior contemplation of the combination and economic motivations to make it, the invention had to reflect a sufficient technological advance beyond what ordinary skill could create. Accordingly, the Court (unlike the Federal Circuit) has treated skill in the art and prior contemplation as cumulative or disjunctive hurdles.[20]

---

[18] *See, e.g., The Packing Company Cases*, 105 U.S. 566, 571-72 (1881) (citing *Pearce v. Mulford*, 102 U.S. 112, 118 (1880)); *Penn. R. Co. v. Locomotive Eng. Safety Truck Co.*, 110 U.S. 490, 494 (1884); *Florsheim v. Shilling*, 137 U.S. 64, 76 (1890); *Saranac Automatic Mach. Corp. v. Wirebound Patents Co.*, 282 U.S. 704, 713 (1931) (citing *Hollister v. Benedict Mfg. Co.*, 113 U.S. 59, 72-73 (1885)); *Cuno Eng. Corp. v. Automatic Devices Corp.*, 314 U.S. 84, 89-90 (1942).

[19] *See Teleflex Inc. v. KSR Int'l, Inc.*, 119 Fed. Appx. 282, 285-86 (Fed. Cir. 2005) (citing, *inter alia*, *Tec Air, Inc. v. Denso Mfg. Mich. Inc.*, 192 F.3d 1353 (Fed. Cir. 1999); *Pro-Mold & Tool Co. v. Great Lakes Plastics, Inc.*, 75 F.3d 1568, 1572 (Fed. Cir. 1996)).

[20] *See, e.g., Textile Mach. Works v. Louis Hirsch Textile Mach.*, 302 U.S. 490, 497 (1938) ("the addition [of a new element to a combination] must be the result of invention rather than the mere exercise of the skill of the calling, *and* not one plainly indicated by the prior art") (emphasis added); *Altoona Publix Theaters, Inc. v. Am. Tri-Ergon Corp.*, 294 U.S. 477, 486 (1935) (improvements "must be the result of invention, and not the mere exercise of the skill of the calling *or* an advance plainly indicated by the prior art") (citing *Electric Cable Joint Co. v. Brooklyn Edison Co.*, 292 U.S. 69, 79-80 (1934)) (emphasis added).

Proof of the existence in the prior art of all of the parts of the combination thus was normally sufficient to demonstrate that the invention was unpatentable,[21] unless the patentee introduced evidence to show that an unexpected function had resulted. In that case, the Court would carefully scrutinize the evidence of an unexpected function and arguments that the function had resulted from the application of more than ordinary skill.[22] Similarly, the Court would carefully scrutinize arguments that evidence of commercial success demonstrated that ordinary skill was insufficient to make the combination. As the Court recognized, commercial success can result from many sources, and even success attributable to the invention does not necessary demonstrate a sufficient technological contribution.[23] Thus, the Court rarely credited

---

[21] *See, e.g., Honolulu Oil Corp. v. Halliburton*, 306 U.S. 550, 562 (1939) ("[T]he method claimed in suit was clearly indicated in the prior art. It cannot reasonably be held that anything more than mechanical skill . . . would be required to suggest the [last step, which was known from other prior art patents].").

[22] *See, e.g., Powers-Kennedy Contracting Corp. v. Concrete Mixing & Conveying Co.*, 282 U.S. 175, 184 (1930) (noting the lack of evidence of prior impracticability and the "presumption of operability from . . . patenting"); *id.* at 184-85 (rejecting arguments of inventiveness based on a change in size, which involved "no more than mechanical skill and would not amount to invention"); *Toledo Pressed Steel Co. v. Standard Parts*, 307 U.S. 350, 356 (1939) (concluding "[o]n the records before us, it is impossible to hold that production of the patented device [a 'mere aggregation'] required more than mechanical skill and originality attributable to those familiar with the art").

[23] *See, e.g., Textile Mach. Works*, 302 U.S. at 498-99 ("success may be decisive where invention is in doubt, but an insuperable obstacle . . . here is our inability . . . to say 'that an art which knew how to [use the prior art elements] . . . required some uncommon talent merely to conceive of combining the two' ") (citation omitted); *Saranac Automatic Mach. Corp.*, 282 U.S. at 713-14 (rejecting commercial success evidence because the patented invention did not "embrace[ ]" a "new result" and did not "involve invention"); *Great Atl. & Pac. Tea Co.*, 340 U.S. at 153 (rejecting lower court reliance on evidence that the invention "filled

(Continued on following page)

circumstantial evidence of commercial success when direct evidence suggested that sufficient skill existed in the art.[24]

Finally, as the Court recognized in *Concrete Appliances Co. v. Gomery*, 269 U.S. 177 (1925), a novel combination may become apparent when exogenous developments in technology occur or when a new motivation to apply existing technology arises, resulting in the nearly simultaneous invention of similar or identical subject matter. A few years prior to the invention at issue in that case, the use of wet concrete had become the norm in building practices and prior art devices for moving grain and similar substances had been adapted for use with wet concrete. *See id.* at 182. Once the feasibility of using wet concrete was established, "common experience in the mechanical arts would lead one to expect that ... the mechanical skill of those familiar with engineering and building problems would seek to make use of known methods and appliances...." *Id.* at 184. Given the exogenous technological developments, the independent and nearly simultaneous creation of a novel combination and the existence of competing patent applications provided "persuasive evidence" to demonstrate the lack of patentable creativity. *Id.* at 185.

In 1952, Congress codified the Court's high threshold of inventive creativity, prohibiting patents on new inventions that were "obvious" differences from the prior art. *See* Act

---

a long-felt want and has enjoyed commercial success" because "commercial success without invention will not make patentability"); *Sakraida v. Ag Pro, Inc.*, 425 U.S. 273, 282-83 (1976) (production benefits and commercial success "'did not produce a "new or different function" ... within the test of validity of combination patents.' ... These desirable benefits 'without invention will not make patentability.'") (citations omitted).

[24] *See, e.g., Altoona Publix Theaters*, 294 U.S. at 487-88 (lack of invention "would have to be far more doubtful ... to be aided by evidence of commercial success, indicating that it brought realization of a long-felt want").

of July 19, 1952, ch. 950, § 103, 66 Stat. 792, 798 (currently codified at 35 U.S.C. § 103(a)). Congress provided that:

> A patent may not be obtained though the invention is not identically disclosed or described as set forth in section 102 of this title, if the differences between the subject matter sought to be patented and the prior art are such that the subject matter as a whole would have been obvious at the time the invention was made to a person having ordinary skill in the art to which said subject matter pertains.

35 U.S.C. § 103(a). As the Court held in *Graham*, "the revision was not intended by Congress to change the general level of patentable invention . . . [but] was intended merely as a codification of judicial precedents" including *Hotchkiss*. 383 U.S. at 17. *See id.* at 3-4.[25]

Accordingly, in *Anderson's-Black Rock, Inc. v. Pavement Salvage Co.*, 396 U.S. 57 (1969), the Court held that the invention at issue merely combined the functions of separate machines into one machine, which was "not critical or essential to the functioning" but rather was only "a matter of great convenience[that] did not produce a 'new or different function . . . within the test of validity of combination patents.'" *Id.* at 60 (quoting *Lincoln Eng. Co.*

---

[25] The enacted provision also included that "[p]atentability shall not be negatived by the manner in which the invention was made." 35 U.S.C. § 103(a). This additional language should not be understood as altering the Court's prior standard for the objective technological contribution required. Rather, it reflects only legislative rejection of the subjective "flash of creative genius" formulation articulated in *Cuno Eng. Corp.*, 314 U.S. at 91, which the Court in *Graham* subsequently held was only a "rhetorical embellishment" of the *Hotchkiss* standard. 383 U.S. at 15 n.7. *Cf. Densmore v. Scofield*, 102 U.S. 375, 378 (1880) (quoting appellant's argument that the invention lacked "'a flash of thought'"); *Earle*, 8 F.Cas. at 255 (rejecting consideration of "mental labor").

of Ill. v. Stewart-Warner Corp., 303 U.S. 545, 549 (1938)). *See id.* at 59 (placing all the components together "is relevant to commercial success, not to invention"). Similarly, in *Sakraida*, the Court held that, by rearranging old elements to perform the same functions, the invention might "perhaps produc[e] a more striking result" but "[s]uch combinations are not patentable under standards appropriate for a combination patent." 425 U.S. at 282. *See id.* at 281-82 (dismissing evidence of improved function that had been relied on by the Court of Appeals to reverse the District Court).

II. The *Graham* Approach to Determining Patentability is Sound, But Requires Further Clarification for Its Proper Understanding and Application by the Patent Office and the Courts.

As the Court held in *Graham*, the purpose of the obviousness standard is "to develop some means of weeding out those inventions which would not be disclosed or devised but for the inducement of a patent." 383 U.S. at 11.[26] This statement of purpose takes into account the different incentives that exist to make inventions and the different means of appropriating returns from inventions.[27]

---

[26] *Cf.* Edmund Kitch, *Graham v. John Deere Co.: New Standards for Patents*, 1966 Sup. Ct. Rev. 293, 301 (recommending an "unlikely to be developed" standard and noting that obviousness analysis "does not view the inducement of investment . . . as an appropriate function of the patent system"); John Schlicher, Patent Law: Legal and Economic Principles at 5-7 (West 1992) (arguing that § 103 forbids patents "where the cost and risk of independent research to obtain an invention are low enough that an ordinary researcher would be expected to incur them at about the same time without the additional incentive of a patent").

[27] *See, e.g.*, John H. Barton, *Non-Obviousness*, 43 IDEA 475, 491-93 (2003) (Barton, *Non-Obviousness*) (citing Wesley M. Cohen et al.,

(Continued on following page)

This statement of purpose, however, does not readily distinguish when the patent incentive is needed, given that "there is little doubt that . . . routine research would be done in the absence of a patent system, assuming the market is important enough."[28]

This statement of purpose, moreover, fails to articulate a relevant time frame over which to assess whether new inventions would otherwise have been "disclosed or devised." *See Atl. Works*, 107 U.S. at 200 (ordinary mechanics continuously make improvements and thus inventions "naturally and spontaneously occur"). The legislative language requires only that the judgment of obviousness must be based on the state of the art "at the time the invention was made." 35 U.S.C. § 103(a). But obviousness must be assessed by evaluating what will occur in the future (based on analysis informed by looking at the past). Because the articulation in *Graham* does not *directly* address how quickly the art would develop, the Patent Office and the courts have failed adequately to consider how quickly the invention might spontaneously occur.[29]

Protecting Their Intellectual Assets: Appropriability Conditions and Why U.S. Manufacturing Firms Patent (or Not) (Natl. Bureau of Econ. Research Working Paper No. W7552, Feb. 2000), *available* at http://www.nber.org/papers/w7552, last visited Aug. 9, 2006).

[28] Barton, *Non-Obviousness*, *supra*, at 506. *See* Duffy & Merges, *supra*, at 152 (describing how, once a market developed, "the problem of streamlining a[n] internet checkout was easily solved," requiring only "the obvious application of existing techniques to a new problem").

[29] *See, e.g.*, Rich, *supra*, at 81-82 (discussing "the constant increment of improvements on what we already have," without explaining how to differentiate between improvements produced "by the expected skill of ordinary workers in the arts and by the unobvious developments which would not occur spontaneously from the application of such ordinary skill").

The *Graham* formulation also contains a conceptual problem that encourages errors of analysis. Although a patent provides an economic incentive, this Court's case law makes clear that the obviousness determination is a technical judgment regarding the capability of those skilled in the art to make the invention. Obviousness does not and should not normally involve any consideration of the economic motivations in the art to create the invention.[30]

A clearer restatement of the purpose of the obviousness standard is thus needed. Historians suggest that the Court hold that the obviousness inquiry is designed to prohibit patents on inventions that could have been made by those skilled in the art within a reasonable period of time (following the time that the invention at issue was actually made) and within reasonable budgetary constraints. Historians believe that this standard is implicit in the Court's holding in *Hotchkiss* that an invention is unpatentable if it requires "no more ingenuity or skill ... to construct ... than that possessed by an ordinary mechanic acquainted with the business." 52 U.S. (11 How.) at 265.[31] Some threshold of time and effort is required to distinguish patentable from unpatentable inventions. The Court's precedents regarding combinations functioned as a proxy for directly assessing how quickly the invention would be "devised or disclosed" and

---

[30] There may be some rare inventions that are so costly and so risky that the ability to recoup investments must be considered preconditions to the ability of those skilled in the art to make them. But the level of skill in the art presumes a reasonable research budget and the ability to engage in routine development risks. *See* Robert P. Merges, *Uncertainty and the Standard of Patentability*, 7 High Tech L.J. 1, 48-62 (1992).

[31] *See* Duffy & Merges, *supra*, at 117 (discussing the "persistent application of ordinary skills" and the "greater level of skill" required by *Hotchkiss*, in regard to technical problems solved "after a few months of modestly ingenious effort").

whether that should be considered quickly enough. Direct assessment of these questions requires more explicit application of technical expertise and more explicit articulation of policy judgments.

Because inventive efforts are limited by time and budgetary constraints, persons having ordinary skill in the art normally will experiment only with combinations having reasonable expected probabilities of discovering new or improved functions. Unless the reward is particularly great or they have unusually large institutional or individual resources, ordinary artisans cannot experiment with every possible combination. For this reason, this Court held in the companion case to *Graham* that the ability to repetitively combine all known prior art substitutes does not necessarily demonstrate obviousness, particularly if the prior art discouraged an expectation of success (which is commonly referred to as teaching away from the solution). *See United States v. Adams*, 383 U.S. 39, 51-52 (1966) (the combination battery at issue required a person skilled in the art to "ignore . . . long-accepted factors, [that] when taken together, would, we believe, deter any investigation into such a combination").[32] Conversely, as recognized by the Court in *Concrete Appliances Co.*, once an exogenous technology shift occurs, skilled artisans will rapidly apply new technology to create new machines and processes having improved functions that

---

[32] *See, e.g., Novo Industri A/S v. Travenol Labs., Inc.*, 677 F.2d 1202, 1208 (7th Cir. 1982) (discussing finite research time); *In re Antonie*, 559 F.2d 618, 620 (C.C.P.A. 1977) (stating that ignoring unexpected results by focusing on "'obvious to try'" experimentation is inconsistent with the second sentence of § 103); *In re Tomlinson*, 363 F.2d 928, 931 (C.C.P.A. 1932) (stating that an "'obviousness to try'" approach to patentability would result in "a marked deterioration" of incentives to invest in research).

earlier would have been thought unlikely to succeed. *See* 269 U.S. at 284.[33]

Significantly, the restatement Historians propose, like the case law it derives from, poses only a technical question. It requires determination of the expectation of success in achieving an inventive contribution of a particular magnitude within reasonable (as determined by the Patent Office or the courts) time and budgetary constraints. Nothing in this standard requires evaluation of motivations – economic or otherwise – to make the invention at issue, even though a patent might provide economic motivations to do so. Rather, the standard takes into account the degree of innovation that would occur in a field without considering patentability.

This restatement accords with this Court's holdings in *Graham* and *Adams*, as well as its earlier and later cases. In contrast, the teaching, suggestion, or motivation to combine test "created by the Federal Circuit"[34] and applied in this case conflicts with this Court's cases. For example, under the Federal Circuit's test, the inventions in *Graham* should have been deemed nonobvious, as there was no explicit or implicit teaching, suggestion, or motivation in the prior art to combine the known mechanical parts.[35] In contrast, under the Federal

---

[33] *Cf.* Greg Blonder, Cutting Through the Patent Thicket; The current U.S. system is harming innovation. A simplified process with stronger patents would encourage economic growth, Business Week Online (Dec. 20, 2005) (discussing how AT&T took old microwave patents and filed identical claims on optical inventions, once the ability developed to make things smaller).

[34] Chief Judge Paul R. Michel, "The State of the Court," at 9 (Federal Circuit Bar Association Annual Conference, June 29, 2006, revised July 10, 2006), *available* at http://www.fedcir.gov/speech.pdf (last visited Aug. 9, 2006).

[35] *See, e.g.*, 383 U.S. at 24-25 ("We assume that the prior art does not disclose such an arrangement. . . . Certainly a person having

(Continued on following page)

Circuit's test, the chemical combination in *Adams* would have been unpatentable based on a prior art suggestion to combine.[36]

Given the restatement proposed here, the Court can also further clarify the methodology adopted in *Graham*.[37] As the Court held in *Graham*, obviousness or nonobviousness "is determined" "[a]gainst th[e] background" of: (1) determining "the scope and content of the prior art"; (2) ascertaining the "differences between the prior art and the claims at issue"; and (3) resolving "the level of ordinary skill in the pertinent art." 383 U.S. at 17. Circumstantial evidence of these facts may be considered in determining obviousness. But such secondary consideration evidence should be used only to supplement the factual background against which to legally determine obviousness. *See id.* at 17-18 ("Such secondary considerations as commercial success, long felt but unsolved needs, failure of others, etc., might be utilized to give light *to the circumstances surrounding the origin* of the subject matter sought to be patented.") (emphasis added). Secondary

---

ordinary skill in the prior art . . . would immediately see that the thing to do was what Graham did. . . ."); *id.* at 30, 35 ("the [appeals] court found 'nothing in the prior art suggesting Scoggin's unique combination of these old features'. . . . The substitution of a rib built into a collar likewise presents no patentable difference above the prior art.").

[36] In *Adams*, the prior art suggested combination of magnesium and cuprous chloride for batteries, but because the invention accomplished unexpectedly good results using water as an electrolyte (the problem to be solved) the Court concluded that the combination reflected an "interdependent functional relationship" and more than "mere substitution" of prior art designs. 383 U.S. at 50-51.

[37] *See* 383 U.S. at 18-19 (emphasizing the need for the Patent Office to follow the same approach to obviousness determinations to avoid litigating validity after the fact – thereby "debilitat[ing] the patent system" – and to provide a closer correlation of judicial and administrative practice).

considerations (particularly regarding motivations) do not themselves determine obviousness.

Because the "ultimate question of patent validity" is a question of law, obviousness (one of the "three conditions" of validity) also is a question of law. *Id.* Like any legal question, obviousness "lends itself to several basic factual inquiries," upon which legal judgment must operate. *Id.* Given the restatement proposed here, the legal judgment applied to the factual background requires both an expert technical assessment of how quickly the art would have developed the capability to make the invention (given reasonable budgetary constraints) and a policy judgment of whether it would have developed that capability quickly enough. The expert assessment determines when the public would possess the knowledge without the inventor's contribution, and thus could make unrestricted use of the technology. The policy judgment determines what budgetary constraints are considered reasonable and whether the public would have had to wait an unreasonably long time.[38]

Without additional legislative guidance, the courts (or the Patent Office[39]) must develop policies through the "abundance

---

[38] How long the public should have to wait will depend on the importance of the invention. The legal question requires balancing the benefits of earlier public acquisition with the costs of exclusive rights. Thus, Congress originally required judgments by the Patent Office (replaced by the obviousness standard) that an invention must be sufficiently useful and important. *See supra* at 3 & n.2. Similarly, Congress initially and the courts subsequently held that certain categories of inventions either were not sufficiently important or were already within the public's constructive possession at the time of invention. *See supra* at 3-4, 5 & n.7, 6-12.

[39] The Patent Office likely possesses discretion to adopt policies in individual adjudications, given the need to apply the obviousness standard when exercising examination authority. *See* 35 U.S.C. § 131. However, the Patent Office may be foreclosed from adopting such policies by legislative (but not interpretive) rules, as the Federal Circuit

(Continued on following page)

of cases which [have] not be[en] brought under rule, until they should have presented themselves under all their aspects. . . ." Jefferson, Letter, *supra*, at 532. However, this Court has not yet provided sufficient guidance regarding how to make the requisite technical predictions and policy judgments. In the absence of clearer guidance, the courts have often reached conclusions that are not compelled by the facts and that lack persuasive, articulated rationales.

For example, in the Barbed Wire patent case[40] the Court carefully described the prior art and the differences between it and the claimed double-stranded, coiled-barbed-wire invention (which better secured the barb to the wire), as well as secondary considerations of long-felt need, failure of others to make the necessary substitution, and commercial success.[41] After its careful recitation of the facts,

---

has repeatedly held that the Patent Office lacks substantive rulemaking authority. *See, e.g., Merck & Co., Inc. v. Kessler*, 80 F.3d 1543, 1549-50 (Fed. Cir. 1996); *Animal Legal Def. Fund v. Quigg*, 932 F.2d 920, 930 (Fed.Cir.1991).

[40] *Washburn & Moen Mfg. Co. v. Beat 'Em All Barbed-Wire Co.*, 143 U.S. 275 (1892). This case also is significant because of the Court's stated reluctance to credit oral testimony regarding prior invention, leading to adoption of corroboration rules and to a judicially imposed clear and convincing evidentiary presumption of validity. *See id.* at 284-92; *Hybritech Inc. v. Monoclonal Antibodies., Inc.*, 802 F.2d 1367, 1375-76 (Fed. Cir. 1986). When codifying the presumption of validity in Section 282, Congress did not freeze the Court's ability to vary the strength of presumptions for different facts affecting legal judgments of validity. The U.S. Federal Trade Commission has called for removal of such a strong factual presumption. *See* FTC, To Promote Innovation: The Proper Balance of Competition and Patent Law and Policy, at ES-8 to ES-10 (Oct. 2003), *available* at http://www.ftc.gov/os/2003/10/innovationrpt.pdf (last visited Aug. 9, 2006) (FTC, To Promote Innovation).

[41] *See* 143 U.S. at 281-84. The Court was careful to note that the secondary consideration evidence did not create an invariable rule of decision and that commercial success and widespread adoption did not establish patentable invention in all cases. *See id.* at 283-84 (citing

(Continued on following page)

however, the Court conclusorily held that because the inventor's invention, disclosure and use had led to widespread adoption of the technology, "we think the doubts we entertain concerning the actual inventor of this device [given that it may have been developed by accident earlier] should be resolved in favor of the patentee." *Id.* at 292. The Court's reasoning conflates novelty with obviousness,[42] and fails to explain why the combination was patentable. *See id.* at 283-84 (discussing the conflicting precedents but failing to articulate why those relied upon were more applicable to the facts).

Even after *Graham*, sufficient guidance to ground reasoned judicial decisionmaking has been lacking. For example, in the case at hand, the Federal Circuit failed to articulate any relevant and persuasive reasoning for reversing the District Court. *See Teleflex Inc.*, 119 Fed. Appx. at 286-88 (acknowledging that the prior art contained all of the elements of the combination and describing the grounds for the District Court's factual findings of a suggestion to combine); *id.* at 288 (requiring that "the nature of the problem to be solved be such that it would have led a person of ordinary skill in the art to combine the prior art teachings in the particular manner claimed," *i.e.*, "when two prior art references address the precise problem that the patentee was trying to solve," and concluding that the prior art references did not address the precise problem). Like the reasoning in the Barbed Wire patent case, the Court of Appeals reasoning here apparently conflated nonobviousness with novelty[43]

Webster Loom Co. v. Higgens, 105 U.S. 580, 591 (1881), and *Smith v. Goodyear Dental Vulcanite Co.*, 93 U.S. 486, 495 (1876)).

[42] *See id.* (Field, J. dissenting "upon the ground there was no novelty in the invention").

[43] *Cf.* Barton, *Non-Obviousness*, *supra*, at 482-83 ("The MPEP's demand that there be suggestions in the prior art as a pre-requisite to

(Continued on following page)

and failed adequately to explain why the combination was patentable. Like the Barbed Wire patent case, the Court of Appeals decision fails to distinguish (much less provides a reason to ignore) this Court's precedents holding that new combinations were obvious when they lacked any unexpected function or simply applied existing technology to a new use (which appears to be the case here from the undisputed facts in the record). Nor does it provide any explanation of why the combination was a significant achievement, even if it had not previously been "contemplated." *Penn. R. Co.*, 110 U.S. at 494. Unless the Court overrules its precedents, the patent at issue in this case does not appear sustainable.

The Federal Circuit's teaching, suggestion, or motivation to combine test, moreover, conflicts with this Court's approach to obviousness in a number of important ways.[44] First, it wrongly imposes an additional and unwarranted evidentiary requirement on the legal judgment of obviousness,[45] in a misguided effort to prevent "hindsight" bias. *In*

---

combine references converts non-obviousness to something near novelty.").

[44] Existing Patent Office guidance to examiners also conflicts with this Court's jurisprudence, as it is based on the Federal Circuit's (and its predecessor's) jurisprudence. *See, e.g.*, Manual of Patent Examining Procedure §§ 2144.06, 2143.01 (8th ed. Rev. 3 2005); Barton, *Non-Obviousness*, *supra* at 480-81 (discussing the requirement for the prior art to suggest substitution of equivalents); *id.* at 481-82 (discussing the requirement for a prior art suggestion of the desirability of making the combination).

[45] Historians note here their general support for the merits amicus brief filed in support of Petitioner by Intellectual Property Law Professors, and specifically agree that the teaching, suggestion, or motivation test improperly converts a legal judgment into a question of fact. Counsel of Record and some of the Historians were signatories to the brief of Twenty-Four Intellectual Property Law Professors at the petition stage.

re Kahn, 441 F.3d 977, 986-87 (Fed. Cir. 2006).[46] As noted above, prior art suggestions to combine could demonstrate obviousness, but were not previously required in order to do so. The Federal Circuit test thus fails to permit consideration of developments in technology or motivations shortly before the date of invention, which had not yet resulted in contemplation of the particular combination. It thereby eliminates "foresight" that was part of the skill in the art at the time of invention. As recognized by Justice Frankfurter in dissent in *Marconi Wireless Telegraph Co. of Am. v. United States*, 320 U.S. 1 (1943), the "real question is how significant a jump is the new disclosure from the old knowledge." *Id.* at 62. After warning against "[r]econstruction by hindsight," Justice Frankfurter emphasized that "the history of thought records striking coincidental discoveries – showing that the new insight first declared to the world by a particular individual was 'in the air' and ripe for discovery and disclosure." *Id.* For this reason, the Court held in *Concrete Applications Co.* that substantial attention must be paid to developments in technology just before the invention was made. *See* 269 U.S. at 184.[47]

---

[46] *See id.* at 988 (discussing the requirement for the Patent Office to provide "some articulated reasoning with some rational underpinning," but inappropriately citing to *In re Sang Su Lee*, 277 F.3d 1338, 1343-46 (Fed. Cir. 2002), which requires highly specific factual findings reviewed for substantial evidence).

[47] This does not mean that all simultaneous inventions should be considered to have been obvious at the time they were made. *See, e.g.*, Joel Mokyr, *Why Was the Industrial Revolution a European Phenomenon*, 10 Sup. Ct. Econ. Rev. 27, 54 (2003) ("The emergence of a minimum epistemic base is a necessary but insufficient condition for a new technique to be invented."). Thus, perhaps the most famous "simultaneous" discovery – the theory of evolution by natural selection, by Charles Darwin (in basic concept by 1838 and more fully by 1842) and by Alfred Russel Wallace (at least by 1858) – reflected such a significant advance

(Continued on following page)

Second, the Federal Circuit's test improperly raises the unwarranted evidentiary burden even higher, by requiring prior art references that might suggest the combination to address the "precise problem" solved by the patentee. *Teleflex Inc.*, 119 Fed. Appx. at 288. This eviscerates the "analogous arts" doctrine, which had defined the contents of the prior art available to skilled artisans. *See Dann v. Johnston*, 425 U.S. 219, 227-29 (1976); *In re Clay*, 966 F.2d 656, 658-59 (Fed. Cir. 1992). Under that doctrine, once the reference was held analogous, it was available without restriction both for combination of its contents and for what it contemplated.

Third, the Federal Circuit's test converts the technical capability of the skilled artisan into a business motivation or research imperative, *i.e.*, it changes the potential to create the invention from a "could" into a "would." *See, e.g., Kahn*, 441 F.3d at 988 ("'[would] an artisan . . . confronted by the same problems . . . have selected the various elements . . . and combined them in the manner claimed'") (quoting *Princeton Biochemicals, Inc. v. Beckman Coulter, Inc.*, 411 F.3d 1332, 1337 (Fed. Cir. 2005)). This conflicts with this Court's precedents holding that, absent unusual functions in the combination, the person skilled in the art is presumed capable of making substitutions of known elements without regard to motivations to do so. *See, e.g., Dunbar*, 94 U.S. at 199.

Fourth, the Federal Circuit's test and related doctrinal developments alter the *Graham* approach to secondary

---

over prior knowledge it dramatically changed human history (although as a scientific theory it was not a patentable invention). *See* Niles Eldredge, Darwin, Discovering the Tree of Life 10-18, 43-53 (W.W. Norton & Co. 2005) (discussing the factual context for evaluating the scientific contribution). Nevertheless, given a certain basis of knowledge, institutional set-up, and luck, "many inventions or their equivalents seem to have been quite probable *ex ante* and a few inevitable." Mokyr, *supra*, at 38.

considerations. *Graham*, like earlier cases, expressed skepticism regarding the relevance and strength of secondary consideration evidence.[48] The Federal Circuit, however, has required that secondary consideration evidence always be considered, regardless of the results of the direct technological inquiry.[49] The Federal Circuit thus has elevated secondary considerations into a "quasi-presumption" of patentability.[50] Secondary consideration evidence cannot establish a prima facie case of obviousness that requires a teaching, suggestion, or motivation to combine in the prior art; it can be used only to rebut such a case. As this Court has recognized, however, commercial success evidence is highly suspect, because "market-related factors, as opposed to sheer technological superiority" are theoretically and empirically much more likely to determine commercial success.[51] Although failure of others is a better and more direct indicator of technological achievement,[52] it also must be subjected to careful scrutiny, particularly given the phenomenon of simultaneous invention. *See, e.g., Toledo Pressed Steel Co.*, 307 U.S. at 356 (discounting evidence

---

[48] *See* 383 U.S. at 36 ("these factors do not . . . tip the scales of patentability" in light of the "small and non-technical mechanical differences," particularly given constructive availability of a prior art patent that made the prior failures of others "wholly irrelevant").

[49] *See, e.g., Stratoflex, Inc. v. Aeroquip Corp.*, 713 F.2d 1530, 1538 (Fed. Cir. 1983).

[50] *See* Robert P. Merges, *Commercial Success and Patent Standards: Economic Perspectives on Innovation*, 76 Cal. L. Rev. 803, 823-42 (1988) (Merges, *Commercial Success*).

[51] *Id.* at 846. *See id.* at 852 (discussing improper inferences that result from commercial success where firms have reasons to avoid experiments). *Cf.* Rich, *supra*, at 84 (commercial success evidence would require "value judgments of a kind [the Patent Office and courts] are not equipped to make" and such evidence is rarely available at the time of patenting).

[52] *See* Merges, *Commercial Success*, *supra*, at 862-66.

regarding two prior failures unaccompanied by evidence of awareness of the relevant prior art, and noting the absence of any evidence of "widespread effort to solve the problem here involved").

III. The Court Should Clarify the Burdens of Production and Proof Regarding the *Graham* Factors.

Substantial costs of error result from misapplying the obviousness standard and issuing patents on obvious inventions.[53] To minimize such errors, the Court should clearly articulate the burdens of production and proof in making obviousness determinations. Given the limited resources of the Patent Office, the current allocations may often be outcome dispositive and may frequently lead to erroneous results.[54]

The Patent Act has been interpreted by the Federal Circuit and its predecessor to impose a burden of production and proof regarding obviousness on the Patent Office.[55] In light of the discussion above, it is critical that the Court make clear that no evidentiary burden is placed on the Patent Office (or the party contesting validity in infringement litigation) to document a teaching, suggestion, or motivation in the prior art to make the invention at issue. The evidentiary burden

---

[53] *See* Barton, *Non-Obviousness*, *supra*, at 495.

[54] *See* FTC, To Promote Innovation, *supra*, at V-4 to V-24 (discussing current burdens of effective examination, data on patent quality, the need for more resources, and recommending post-grant oppositions to address the numerous invalid patents that predictably issue); Barton, *Non-Obviousness*, *supra*, at 482-83 (nonobviousness "is ultimately predicated on whether there is an adequate body of literature that is accessible to patent examiners to render a determination of patentability.").

[55] *See, e.g., In re Piasecki*, 745 F.2d 1468, 1472 (Fed. Cir. 1984) (citing *In re Warner*, 379 F.2d 1011, 1016 (C.C.P.A. 1967)).

relates to the contents of the prior art and to skill in that art, not to the legal judgment of whether the invention reflects a sufficient technological advance.

At one time the Federal Circuit's predecessor adopted presumptions of *unpatentability* regarding certain types of inventions.[56] These presumptions shifted to applicants the burdens of production and proof of obviousness in the Patent Office. Historians encourage the Court to examine its precedents regarding combination and other inventions, to articulate the burdens of production and proof of nonobviousness or obviousness in the Patent Office and in infringement litigation. In doing so, the Court should specify what authority the Patent Office and lower courts possess to adopt additional presumptions that shift the burdens to applicants or patentees, who are the parties most likely to possess relevant information and incentives to disclose it.

Prior decisions of this Court have been extended by the Federal Circuit to convert the presumption of validity under 35 U.S.C. § 282 into a strong evidentiary hurdle in infringement litigation,[57] notwithstanding the level of Patent Office review of the relevant evidence. Historians encourage the Court to clarify its earlier statements. In particular, the Court should clarify that a clear and convincing burden of proof should not apply to issues for

---

[56] *See, e.g., Piasecki*, 745 F.2d at 1472 (citing, *e.g., In re Henze*, 181 F.2d 196, 201 (C.C.P.A. 1950), and *In re Surrey*, 319 F.2d 233, 235 (C.C.P.A. 1963)).

[57] *See* Matthew D. Henry & John L. Turner, *The Court of Appeals for the Federal Circuit's Impact on Patent Litigation*, 35 J. Legal Stud. 85, 114 (2006) (noting that the Federal Circuit's "stronger presumption of validity" has resulted in a three-fold increase in success in overcoming district court invalidity decisions on appeal, which decisions district courts make half as often as before and patentees appeal twenty-five percent more often).

which the relevant evidence was not previously considered by the Patent Office.[58]

Finally, Historians encourage the Court to adopt a burden-shifting approach to the *Graham* methodology. If a prima facie case of obviousness or nonobviousness can be made based on the facts regarding the prior art and skill, the burdens of production and proof should then shift to rebut that conclusion using secondary consideration evidence (and then only for its bearing on the technological creativity involved). This appears to have been the structure contemplated by *Graham*, when holding that it is "[a]gainst this background [that] the obviousness or nonobviousness of the subject matter is determined" and that when the level of technological creativity has already been demonstrated, secondary considerations are "wholly irrelevant." 383 U.S. at 17, 36.

CONCLUSION

Historically, the Supreme Court has held inventions to a reasonably high standard of technological creativity in order to warrant a patent. The Federal Circuit's teaching-suggestion-motivation test as applied in this case deviates from this historical standard, and thus the judgment of the Court of Appeals should be reversed.

Respectfully submitted,

JOSHUA D. SARNOFF

Counsel of Record for Amici Curiae
Economists and Legal Historians

---

[58] *Cf. Corning v. Burden*, 56 U.S. (15 How.) 252, 271 (1853) ("a patent, thus issued after an inquisition or examination . . . is entitled to much more respect, as evidence of novelty and utility, than those formerly issued without any such investigation.").

APPENDIX A – AMICI CURIAE*

James Bessen
Research on Innovation

Robert Friedel
Professor of History
University of Maryland

Paul Israel
Director and General Editor
The Edison Papers, Rutgers University

Steven Lubar
Professor of American Civilization
Brown University

Robert Merges
Professor of Law
University of California, Berkeley

Michael Meurer
Professor of Law
Boston University School of Law

* Institutional affiliations are provided only for purposes of identification.

559K

(20)

No. 04-1350

Supreme Court, U.S.
FILED
AUG 2 2 2006
OFFICE OF THE CLERK

IN THE

Supreme Court of the United States

KSR INTERNATIONAL CO.,

Petitioner,

v.

TELEFLEX INC. and
TECHNOLOGY HOLDING CO.,

Respondents.

ON WRIT OF CERTIORARI TO THE
UNITED STATES COURT OF APPEALS
FOR THE FEDERAL CIRCUIT

BRIEF OF *AMICUS CURIAE* ELECTRONIC FRONTIER FOUNDATION IN SUPPORT OF PETITIONER

JASON SCHULTZ
Counsel of Record
CORYNNE MCSHERRY
Staff Attorney
ELECTRONIC FRONTIER FOUNDATION
454 Shotwell Street
San Francisco, CA 94110
(415) 436-9333

Attorneys for Amicus Curiae

203049

COUNSEL PRESS
(800) 274-3321 • (800) 359-6859

TABLE OF CONTENTS

	Page
TABLE OF CITED AUTHORITIES	ii
STATEMENT OF INTEREST OF AMICUS	1
SUMMARY OF ARGUMENT	1
BACKGROUND FACTS	5
ARGUMENT	11
A. The Suggestion Test Undermines the Patent Bargain and This Court's Precedents	11
B. The Suggestion Test Helps Create Patent Thickets and Stifles Foss Development	14
C. The Traditional Graham Test Is Better Suited to Assessing the Obviousness of Software Innovations	17
CONCLUSION	20

TABLE OF CITED AUTHORITIES

Page

Cases:

Beckson Marine, Inc., v. NFM, Inc, 292 F.3d 718 (Fed. Cir. 2002) 13

Bonito Boats, Inc. v. Thunder Craft Boats, Inc., 489 U.S. 141 (1989) 11

Graham v. John Deere, 383 U.S. 1 (1966) ..... *passim*

In re Linter, 458 F.2d 1013, 173 U.S.P.Q. 560 (CCPA 1972) 3

In re Rinehart, 531 F.2d 1048, 189 U.S.P.Q. 143 (CCPA 1976) 3

In re Rouffet, 149 F.3d 1350 (Fed. Cir. 1998) 13

In re Saunders, 444 F.2d 599, 170 U.S.P.Q. 213 (CCPA 1971) 3

Kendall v. Windsor, 62 U.S. 322 (1858) 11

Mazer v. Stein, 347 U.S. 201 (1954) 11

Motion Picture Patents Co. v. Universal Film Mfg. Co., 243 U.S. 503 (1917) 11

Pfaff v. Wells Elecs. Inc., 525 U.S. 55 (1998) 11-12

Cited Authorities

Page

Statutes:

35 U.S.C. § 103 12

Other Authorities:

American Intellectual Property Law Association, *AIPLA Report of Economic Survey* (2003) 9

Federal Trade Commission, *To Promote Innovation: The Proper Balance of Competition and Patent Law and Policy* (2003) ..... *passim*

James Bessen & Robert Hunt, *An Empirical Look at Software Patents*, 47, Research on Innovation, Working Paper No. 03-17/R (2004) 16

Manual of Patent Examining Procedure § 2142 ... 3

Robert Merges & John Duffy, *Patent Law and Policy: Cases and Materials* (3D ED. 2002) 14

Yochai Benkler, *The Wealth of Networks: How Social Production Transforms Markets and Freedom* 64 (2006) 6, 16

Cited Authorities

Page

Law Review Articles and Treatises:

G. Vetter, *The Collaborative Integrity of Open Source Software*, 2004 UTAH L.R. 563 (2004) 7

Margo A. Bagley, *Internet Business Model Patents: Obvious by Analogy*, 7 MICH. TELECOMM. & TECH. L. REV. 253 (2000-2001) 15

Rebecca Eisenberg, *Obvious to Whom? Evaluating Inventions from the Perspective of the PHOSITA*, 19 BERKELEY TECH. L.J. 885 (2004) 12, 18

Yochai Benkler, *Coase's Penguin, or Linux and the Nature of the Firm*, 112 YALE L. J. 369 (2002) .. 9

STATEMENT OF INTEREST OF AMICUS

Electronic Frontier Foundation (EFF) is a non-profit, membership-supported civil liberties organization working to protect consumer interests, innovation and free expression in the digital world. EFF and its over 11,000 dues-paying members have a strong interest in assisting the courts and policy-makers in striking the appropriate balance between intellectual property and the public interest. The Federal Circuit's "Suggestion To Combine" test undermines the traditional patent bargain between private patentees and the public and threatens to impede innovation and the dissemination of knowledge, both issues of critical importance to consumers and the principle purposes behind patent law. As an established advocate of consumer interests and digital rights, EFF has a perspective to share that is not represented by the parties to this appeal, neither of whom speaks directly for the interests of consumers or the public interest generally.

Both parties have consented to the filing of this brief.[1]

SUMMARY OF ARGUMENT

The Federal Circuit Court of Appeals has lost sight of the purpose of patents and the mandates of this Court. Properly understood, a patent is a distinct statutorily-created and limited set of rights, designed solely to encourage inventors to disclose their inventions to the public, thereby promoting scientific and industrial progress. Illegitimate patents inhibit that progress, the sharing of knowledge and

1. Per Rule 37.6, amicus states that no counsel for any party has participated, in whole or in part, in writing or financing this brief. Both parties have consented to the filing of this brief and copies of their letters of consent have been filed with the court.

the pace of innovation. Careful scrutiny of whether or not a purported invention is obvious in light of the prior art helps ensure that this extraordinary grant is reserved for significant developments and does not chill innovation by rewarding applicants claiming trivial and self-evident add-ons with exclusive control over those features.

The heart of the error in the decision below is the Federal Circuit's "suggestion test," which asks judges to limit this scrutiny and leave their brains at the courthouse door. In the name of preventing hindsight bias, the court below has denied judges the ability to use common sense and rationality to determine the weight of the obviousness evidence before them. What is worse, it has forced litigants to search through haystack upon haystack of technical knowledge for the exact needle in which someone, somewhere, bothers to state the obvious. Such endeavors are not only inefficient and burdensome but, as many commentators and practitioners in the field have written, are contrary to the principles, policies, and standards this Court has announced.

The damage caused by the Federal Circuit's "suggestion test" goes beyond the litigation context. In addition to tying the hands of judges and juries, the test also binds the discretion of examiners at the U.S. Patent and Trademark Office ("PTO"). Prohibited from rejecting outright obvious patents based on their personal scientific knowledge and judgment, these public servants have been forced to approve a massive surge in patenting, especially in software and biotechnology. Federal Trade Commission, *To Promote Innovation: The Proper Balance of Competition and Patent Law and Policy* ("FTC Report") Chap .4, at 12 (2003). In particular, the so-called "patent trolls" have realized that, with the nonobviousness standard artificially low, the

probability of gaining approval for a patent on an obvious innovation is quite high, especially since it is the PTO examiner who bears the burden of finding the specific "suggestion" document, not the patent applicant. Manual of Patent Examining Procedure (MPEP) § 2142 (Legal Concept of Prima Facie Obviousness); *see also In re Rinehart*, 531 F.2d 1048, 189 U.S.P.Q. 143 (CCPA 1976); *In re Linter*, 458 F.2d 1013, 173 U.S.P.Q. 560 (CCPA 1972); *In re Saunders*, 444 F.2d 599, 170 U.S.P.Q. 213 (CCPA 1971). When these bogus patents issue, they quickly lend themselves to use as weapons against legitimate innovators instead of the properly applied exclusionary grants they were intended to be.

In the case of Free and Open Source Software ("FOSS") projects, the suggestion test has especially pernicious effects. FOSS is a relatively new phenomenon in the software world. Started several decades ago by a few core groups of programmers, it has now blossomed into a multi-billion-dollar segment of the information technology industry, with companies such as IBM, Novell, Sun Microsystems, and Red Hat offering products built on the FOSS development process.

In FOSS projects, software develops openly and transparently. The conversations, the computer code, and each stage of development are accessible and open to the public, maximizing access to scientific and industrial knowledge in the community and spurring further productivity and innovation. In addition, most FOSS collaborations involve contributors from a wide variety of companies, groups, and countries, many of whom volunteer their time and ingenuity out of passion and dedication instead of financial reward.

And therein lies the rub. Because these collaborations are forged primarily through community rather than capital investment, many FOSS projects lack the funding to pay for patent counsel, much less litigation. Thus, the normal costs of doing business in the patent-laden world of information technology – opinion letters, litigation, etc. – are exponentially detrimental for FOSS.

Instead, FOSS projects rely on two main resources to deal with intellectual property problems: specialized copyright licenses and collective knowledge. Through their specialized copyright licenses, FOSS projects can ensure that the transaction costs of sharing code are low and that copyright litigation is rare. To fend off patents threats, however, FOSS projects often depend on the collective knowledge of their members and the documentation of the projects as prior art, to the extent that such documentation exists.

Much of this collective knowledge, however, cannot be considered as evidence of obviousness under the Federal Circuit's suggestion test because it is not explicitly documented in the limited way recognized by the court below, despite clearly meeting the standards laid out by the plain language of Section 103 of the Patent Act. For example, consider a situation where there is an email dialogue between two software programmers to solve a single problem. In the course of their dialogue, they discuss the problem and develop a solution. However, because time is of the essence and their dialogue is informal and ongoing, they fail to explicit suggest all the various and obvious ways the solution could be used to solve other problems. Even though both programmers could testify (under *Graham*) to these obvious additional uses against a patent that claimed them, they would be prohibited from doing so under the Federal Circuit's suggestion test.

EFF files this brief to respectfully request that this Court reject the Federal Circuit's suggestion test and fully embrace the proper scope of Section 103 so that FOSS projects may continue to grow and contribute to our nation's information economy without the chilling effect of bogus patent threats.

BACKGROUND FACTS

Overview of FOSS

The particular negative consequences of the Federal Circuit's suggestion test for the FOSS industry flow from the nature of FOSS development and distribution. FOSS programs are distributed with both their "object" computer code and "source" computer code included. "Source code" is a combination of word-based commands that engineers use to write software, similar to a recipe that a chef might write. That code is then translated by computers into "object code," a series of ones and zeros that tell the computer's components what to do and how to function.

Traditionally, commercial software companies distribute their product in object code form only. In other words, the software can tell their customers' computers what to do, but only the most advanced programmers will be able to discern precisely how those instructions are given and, therefore, be able to understand and change those instructions. To analogize to another commercial product, the customer buys the car but cannot look under the hood. FOSS developers, by contrast, distribute their software with the source code freely available so that recipients can easily understand, adapt, and hopefully improve the software. The software is often distributed under the terms of the General Public License, which requires, among other things, that modified

versions released to the public continue to make the source code available.[2]

FOSS began in the academic context, but has become an integral part of the software industry. For example, several critical internet and email technologies were developed in FOSS projects. Tim O'Reilly, *Open Source Paradigm Shift*, June 2004, http://tim.oreilly.com/articles/paradigmshift_0504.html (last visited Aug. 20, 2006). FOSS technologies are now widely used by public and private entities, from the United States federal government to private corporations such as IBM Corporation, Sun Microsystems, and Google, Inc. *See* Yochai Benkler, *The Wealth of Networks: How Social Production Transforms Markets and Freedom* 64 (2006). These entities recognize the myriad benefits of FOSS, including improved reliability and security (because the software is examined and tested by hundreds if not thousands of developers in a wide variety of contexts) and low cost. *Id.* at 46 (describing how IBM benefits from use of FOSS). Moreover, FOSS customers often benefit by avoiding "technology lock-in" – if they do not like one vendor's service, they can switch to another vendor without major changes to their technology infrastructure. Open Source Initiative, *The Open Source Case for Customers*, http://www.opensource.org/advocacy/case_for_customers.php (last visited Aug. 20, 2006).

Moreover, the public benefits from FOSS projects by the enrichment of a fund of knowledge embodied in the source code that anyone may examine, test and/or improve. Indeed, with respect to software development, this type of knowledge is

---

2. Free Software Foundation, *GNU General Public License* (Version 2 June 1991), http://www.gnu.org/copyleft/gpl.html (last visited Aug. 20, 2006).

significantly more valuable than that disclosed in a patent because patents do not require disclosure of source code. FTC Report, *supra*, Chap. 3, at 56; G. Vetter, *The Collaborative Integrity of Open Source Software*, 2004 UTAH L.R. 563, 586 (2004) ("Source code makes the inner workings of a computer program directly observable. [Other] techniques are rarely as effective as access to the source code when one wants to leverage the work of another programmer.") (citation omitted). Therefore, the growth of FOSS should be welcomed and encouraged.

The FOSS Business Model

FOSS is usually distributed for free or at minimal cost. Private individuals and academics do some of this distribution, but for-profit FOSS companies are flourishing as well. Rather than selling proprietary software, for-profit FOSS companies generate revenue from ancillary services. For example, companies such as Red Hat make money from compiling software applications based on the GNU/Linux operating system. *Id.* at 616 (discussing FOSS projects).[3] They also charge for value-added services such as installation, consultation and support. *Id.* Companies such as IBM Corporation distribute web server software that includes the Apache web server, the most popular web server program in the world. *Id.*[4]

---

3. Operating systems are themselves software programs that control the computer hardware. Software applications use operating systems as a platform to communicate between the computer hardware and the specific application.

4. IBM, IBM http Server: Features and Benefits, http://www-306.ibm.com/software/webservers/httpservers/features/index.html (last visited Aug, 18, 2006); Netcraft, August 2006 Web Server Survey, http://news.netcraft.com/archives/2006/08/01/august_2006_web_server_survey.html (last visited Aug. 18, 2006) (Apache occupies sixty three percent of web server market).

This Court has observed that a patent should be granted *only* if the invention would not be made or disclosed but for the economic incentive of patent protection. *Graham v. John Deere*, 383 U.S. 1, 11 (1966). FOSS software is generally made and disclosed without that economic incentive, thereby benefiting consumers and competitors alike without imposing the social costs of exclusive rights. Unfortunately, holders of bogus obvious patents, assisted by the Federal Circuit's improper test, may limit that growth by destroying the alternative economic incentives upon which FOSS companies rely.

Effect of Patents on FOSS Development; the Problem of Prior Art

The FOSS industry is "poised for rapid growth." Josh Lerner and Jean Tirole, *The Economics of Technology Sharing: Open Source and Beyond*, 19 JOURNAL OF ECONOMIC PERSPECTIVES 99, 100 (2005). To use just one metric, as of this writing software development support website SourceForge.net listed 127,055 open FOSS projects. *See* SourceForge.net, http://sourceforge.net/ (last visited Aug. 14, 2006).

Software patent litigation continually threatens to stifle that growth. As Lerner and Lirole note, the proliferation of software patents present special problems for the open source community. First, one of the major incentives behind use of FOSS is its low cost of use. *See* Business Week Online, *Open Source, Now It's an Ecosystem*, October 3, 2005, http://www.businessweek.com/technology/content/oct2005/tc2005103_0519_tc_218.htm (last visited Aug. 18, 2006). If companies that invest in using and building on FOSS must defend themselves against bogus patent threats, that cost

could skyrocket.[5] *See generally*, *Always On: Open Source and Patent Trolls*, http://blogs.zdnet.com/BTL/?p=3384 (last visited Aug. 20, 2006). Indeed, patent concerns have already slowed the adoption of Linux in the public sector. *See* Lerner and Tirole, *supra*, at 113; *see also generally* Yochai Benkler, *Coase's Penguin, or Linux and the Nature of the Firm*, 112 YALE L. J. 369, 445 (2002) ("Strong intellectual property rights, in particular rights to control creative utilization of existing information, harm peer production by raising the cost of access to existing information resources").

In order to keep these costs low in the realm of copyright, FOSS projects rely heavily on their specialized copyright licenses. These licenses, such as the GNU General Public License, provide standard terms to ensure that all users of the code abide by certain public interest principles, such as mandatory publication of the source code for any new improvement or modifications to the program. This keeps transaction costs extremely low for the FOSS community and litigation the exception rather than the rule.[6]

With patents, however, such licenses have yet to provide effective protection against bogus patent threats, especially from entities outside the FOSS community. Thus, in order

---

5. The American Intellectual Property Law Association estimates that defense against a single software patent lawsuit can cost between two and five million dollars. American Intellectual Property Law Association, *AIPLA Report of Economic Survey* (2003).

6. In addition, because of the First Amendment and idea-expression limitation on copyright, copyright claims cannot prohibit the dissemination of scientific knowledge and learning in the FOSS community; instead, such claims can only limit specific implementations of code. *See generally* Vetter, *supra*, at 589, n. 69.

for the economics of FOSS to continue to function in the world of patents, there must be an efficient way for FOSS projects to protect and defend themselves without incurring substantial legal fees or high transaction costs. A rigorous and fair standard for obviousness serves that purpose.

Second, the nature of FOSS development, in particular the vast and growing trove of public knowledge it engenders, make it especially vulnerable to so-called "Patent Trolls" – companies that acquire questionable patents and assert them against others who either cannot afford to fully defend themselves or, when confronted with the prospect of damages, injunctions, and fees, find settlement the only rational option. Because FOSS projects publish their code and commentary publicly, trolls can easily identify targets for frivolous litigation. That frivolous litigation—actual or merely threatened—may chill the lively discussions and resulting innovations that make FOSS software an invaluable public resource.

Third, the cost of litigation under the suggestion test may actually be higher for these projects because of the nature of FOSS development. FOSS development involves the (frequently ad hoc) collaboration of hundreds, even thousands of developers. These developers may reside in different countries, with little to no budget for researching literature and other prior art. Moreover, if the culture of software development tends to be informal, FOSS development is still more informal. FTC Report, *supra*, Chap. 3, at 54. Documentation is likely to take the form of emails or postings to internet message boards and newsgroups that are much more informal than traditional academic research or industry publications. While these communications may support a finding that many patents are obvious under this Court's

Graham test, they may not contain the "magic words" required by the Federal Circuit to satisfy the suggestion test. The limited applicability of such documentation is ironic, given that many FOSS developers are likely to be the quintessential "persons having ordinary skill in the art" (PHOSITAs) that Section 103 relies upon to determine obviousness. A return to the traditional *Graham* test would allow FOSS companies to take appropriate advantage of the PHOSITA networks from which FOSS software emerges and properly defend themselves on Section 103 grounds.

ARGUMENT

A. The Suggestion Test Undermines the Patent Bargain and This Court's Precedents

As the Court has repeatedly affirmed, patents are a "carefully crafted bargain for encouraging the creation and disclosure of new, useful and nonobvious advances in technology and design." *Bonito Boats, Inc. v. Thunder Craft Boats, Inc.*, 489 U.S. 141, 151 (1989); *Mazer v. Stein*, 347 U.S. 201, 219 (1954). (Intellectual Property Clause based on "conviction that encouragement of individual effort by personal gain is the best way to advance public welfare through the talents of authors and inventors in 'Science and Useful Arts.'"); *Kendall v. Windsor*, 62 U.S. 322 (1858) ("the benefit to the public or the community at large was another and doubtless the primary object in granting and securing [the patent] monopoly"); *Motion Picture Patents Co. v. Universal Film Mfg. Co.*, 243 U.S. 503 (1917) ("this court has consistently held that the primary purpose of our patent laws is not the creation of private fortunes for owners of patents but is 'to promote the progress of science and the useful arts'"); *Pfaff v. Wells Elecs. Inc.*, 525 U.S. 55, 63

(1998) ("the patent system represents a carefully crafted bargain" between the public and the inventor).

The success of this bargain rests, in part, on the principle that the strong protections of a patent should be reserved to important advances in human knowledge, *i.e.*, technological developments that are not already "within the public grasp, or so obvious that they readily could be. . . ." *Bonito Boats*, 489 U.S. at 156. This reservation is no more than common sense—obvious advances will be made anyway, without the additional incentives a patent provides, nor the social costs it imposes. Rebecca Eisenberg, *Obvious to Whom? Evaluating Inventions from the Perspective of the PHOSITA*, 19 BERKELEY TECH. L.J. 885, 886 (2004). Moreover, denying patent protection to obvious developments, however novel, helps accomplish the purpose of technological dissemination by encouraging competitors to build on a patented technology.

Recognizing as much, the drafters of the Patent Act provided that "a patent may not be obtained . . . if the differences between the subject matter sought to be patented and the prior art are such that the subject matter as a whole would have been obvious at the time the invention was made to a person having ordinary skill in the art ["PHOSITA"] to which said subject matter pertains." 35 U.S.C. § 103(a).

Interpreting this provision, this Court has long since set a high but reasonable standard for determining nonobviousness. In the seminal case of *Graham v. John Deere*, this Court held that nonobviousness must be evaluated in light of "the scope and content of the prior art . . . differences between the prior art and the claims at issue . . . and the level of ordinary skill in the pertinent art." *Graham*, 383 U.S. at 17. The Court also recognized the potential

relevance of the circumstances surrounding the origin of the subject matter sought to be patented such as "commercial success, long felt but unsolved needs, failure of others, etc." *Id.* at 17-18. This multi-factor test acknowledges the importance of evaluating obviousness on a case-by-case basis, with close attention to what a PHOSITA would have known or been able to easily surmise prior to developing the technology in question.

The Federal Circuit's suggestion test ignores the dictates of *Graham*, and the patent bargain itself, by setting the standard for patentability artificially low and ignoring the PHOSITA. According to the Federal Circuit, an invention cannot be found obvious unless a litigant can identify some "teaching, suggestion, or motivation" in the prior art that would have lead a PHOSITA to combine the prior art references to create the technology at issue. *See, e.g., In re Rouffet*, 149 F.3d 1350, 1355-56 (Fed. Cir. 1998); *Beckson Marine, Inc., v. NFM, Inc*, 292 F.3d 718, 728 (Fed. Cir. 2002). Under the Federal Circuit's reading of Section 103, even the simplest novel developments within ordinary grasp – no matter how obvious – can be patented unless someone, somewhere, was explicitly inspired to suggest those developments in written form. Small wonder that there is no suggestion in the Patent Act, *Graham* or any other case decided by this Court that such a test is required.

The irony of this rule is that the more obvious the improvement, the less likely one is to suggest it. In other words, if something is self-evident, why even mention it at all? Indeed, according to the Federal Circuit's test, one of the quintessential overreaching patents—George Selden's

patent on putting a gasoline engine on a chassis to make a car—might have been upheld, even though the basic invention covered by that claim was so obvious that many people worldwide thought of it independently as soon as gasoline engines were developed. *See* Robert Merges & John Duffy, *Patent Law and Policy: Cases and Materials* 644-46 (3D ED. 2002) (discussing Selden patent).

B. The Suggestion Test Helps Create Patent Thickets and Stifles Foss Development

The Federal Circuit's justification for the suggestion test, while pragmatic, is not only without basis in law but also threatens the purposes of the Patent Act, especially when applied to innovation in the FOSS industry.

The suggestion test simplifies the job of the courts in determining whether a defendant has an obviousness defense based on an explicitly documented suggestion; however, this ease comes at the expense of defendants, their customers, and the public in general. Under the suggestion test, the obviousness inquiry begins and ends with only the most well-papered prior art; it completely ignores the vast knowledge base and resources of the public and in specific, the PHOSITA. As a practical matter, this means litigants are denied access to one of the best resources available on the subject of what is publicly known or easily perceived.

Moreover, the suggestion test is particularly damaging to industries, like the software industry, that depend on incremental innovation and tend to be inhabited by practitioners who have neither the time nor the inclination

to publicly document their actual work, let alone all the obvious suggestions for next steps they might ponder. *See* FTC Report, *supra*, Executive Summary at 6 (footnote omitted): ("Much of th[e] thicket of overlapping patent rights results from the nature of the technology; computer hardware and software contain an incredibly large number of incremental innovations.") *see also* Margo A. Bagley, *Internet Business Model Patents: Obvious by Analogy*, 7 MICH. TELECOMM. & TECH. L. REV. 253, 279-80 (2000-2001) (documentary prior art less available with respect to software); Lawrence Lessig, *The Problem with Patents*, The Industry Standard, Apr. 23, 1999, www.lessig.org/content/standard/0,1902,4296,00.html (last visited Aug. 20, 2006) (same). Under the Federal Circuit's suggestion test, these companies are particularly vulnerable to exploitation by patent trolls because evidence of the obviousness of bogus software patents is hard to come by as per industry practice.

Such bogus patent threats can result in significant costs to businesses and ultimately to the public. Indeed, a questionable patent that claims a single routine in a software program may be asserted to hold up production of the entire software program. *See* FTC Report, Executive Summary at 6 ("In some industries, such as computer hardware and software, firms can require access to dozens, hundreds, or even thousands of patents to produce just one commercial product.")

Many in the software industry have responded to this problem by exacerbating it. On the theory that the best defense is a good offense, these companies file for their own questionable patents. *See id.* ("as more and more patents issue on incremental inventions, firms seek more and more patents

to have enough bargaining chips to obtain access to others' overlapping patents.") (footnote omitted); James Bessen & Robert Hunt, *An Empirical Look at Software Patents*, 47, Research on Innovation, Working Paper No. 03-17/R (2004) (developers have incentives to "over-patent" for strategic or defensive reasons in order to gain leverage in cross-licensing negotiations.). An arsenal of patents can serve as a strong deterrent to litigation, as potential litigants may fear a counterclaim.[7] Defendants may also simply settle, even if they believe the patent claim to be specious, in order to avoid the extraordinary costs of litigation.

FOSS projects have even fewer options to battle the patent problem. First, FOSS software is rarely patented, as few projects have either the legal budget to do so or the philosophical inclination to exclude others from enjoying the benefits of their innovation. In fact, the economic margins of many FOSS projects are so thin that the expensive legal costs associated with both acquiring or defending patents would, quite simply, put the projects out of business. Indeed, a concern for the social costs of intellectual property rights in software led, in part, to the development of the FOSS movement. *See generally* Yochai Benkler, *The Wealth of Networks: How Social Production Transforms Markets and Freedom* 64-66 (2006). Thus, by refusing to join in a race to the bottom, many FOSS projects have made themselves particularly vulnerable to bogus and hard-to-defend patent threats—an outcome that perverts the Constitutional purpose of the patent system: to promote knowledge and innovation.

---

7. Patent Trolls, however, are not vulnerable to this strategy, as they have no viable products or services to target or enjoin.

FOSS projects do have an alternative natural resource: the skills and knowledge base of the peer communities that collaborated to develop the software in question. By substituting its suggestion test for the practical judgment of a PHOSITA as the touchstone of the obviousness inquiry, the Federal Circuit deprives FOSS projects of the ability to make full use of that resource.[8] Moreover, it downplays what could be crucial and easily gathered documentary evidence of obviousness: the emails and newsgroups posts generated in the process of FOSS software development. Unless those documents contain an explicit suggestion to combine – something much more common in academic papers and industry publications than informal emails – they can do little to cut litigation short.

C. The Traditional Graham Test Is Better Suited to Assessing the Obviousness of Software Innovations

The *Graham* test is well-suited to assess obviousness in the software development context, given the relative lack of easily-accessible documentation of prior art, the incremental nature of software development, and the rapidly evolving level of skill of ordinary software developers. In particular, it can help avoid "patent thickets"; with a rigorous nonobviousness standard in place, there is no need to "patent modest incremental advances for fear of being foreclosed by

8. In fact, the USPTO and several of the largest patent portfolio holders have recently announced support for a new collaborative project to subject published patent applications to "community peer review" using many of the peer research and problem solving techniques pioneered in FOSS projects. *See* CNNMoney.com, *Patent Review Goes Wiki*, http://money.cnn.com/magazines/fortune/fortune_archive/2006/08/21/8383639/ (last visited Aug. 20, 2006); http://dotank.nyls.edu/communitypatent/ (last visited Aug. 20, 2006).

the patents of others from doing what comes easily to [one's] own scientists and engineers." Eisenberg, *supra*, at 886-87. Moreover, it provides room for software companies, including FOSS projects, to use a crucial natural resource: the "judgment, intuition and tacit knowledge of ordinary practitioners in the field that cannot be documented in the written record . . . particularly in fields of industrial technology that offer few incentives to publish." *Id.* at 888.

Equally importantly, the *Graham* factors allow appropriate consideration of the social context of FOSS software development. Because FOSS software develops through the informal collaboration of hundreds or thousands of people, in multiple locations, it is not only rare to identify a single piece of prior art that might suggest a given incremental innovation (if such prior art exists), but also the collaboration itself is likely to give rise to the "tacit knowledge" that actually spurred the given innovation. In other words, the real standard for what is obvious in a given situation may be held collectively by a group of FOSS developers who share a broad knowledge base instead of a mythical "lone inventor" who documents every thought in his or her personal lab notebook. And, because FOSS communities innovate collaboratively, they may be even less likely to publicly publish their innovations in written "suggestive" form. In this context, reliance on suggestion test is particularly detrimental. For FOSS projects, the best way to establish whether a given development was obvious may be to consult the community of PHOSITAs that evaluated the software in question, not look to an explicit academic or industry publication by a single individual.

Finally, the *Graham* test provides room for appropriate use of the one form of documentation that is most likely to be available in FOSS projects: email exchanges and blog or newsgroup posts that can show the level of skill in the art at the time of the purported invention. As discussed above, FOSS developers rely heavily on internet-based communication, such as email and newsgroups, to share knowledge and work collaboratively. The documents may be archived and, if so, can be used to understand the social context of a development and limit hindsight bias. Under the Federal Circuit's test, these valuable documents will be ignored unless they also reflect a suggestion to combine, thus prohibiting factfinders from duly considering legitimate evidence of obviousness in the software industry.

CONCLUSION

The Intellectual Property clause "is both a grant of power and a limitation" that "is limited to the promotion of advances in the 'useful arts.' " *Graham* 383 U.S. at 5. Therefore, as this Court noted, Congress may not "enlarge the patent monopoly without regard to the innovation, advancement or social benefit gained thereby. . . . This is the standard expressed in the Constitution and it may not be ignored." *Id.*

FOSS projects provide extraordinary social benefits, without the "embarrassment" of a patent monopoly. It complements and extends the Constitutional goals of the patent system by encouraging the American spirit of inventiveness and entrepreneurship. In keeping with the motivating spirit behind the Constitution, this Court should apply an obviousness standard that fosters the growth of this new industry, not the growth of patent thickets that hem it in. For this reason, among the many others articulated by KSR and its numerous supporting amici, EFF urges this Court to reaffirm the traditional *Graham* test.

Respectfully submitted,

JASON SCHULTZ
Counsel of Record
CORYNNE MCSHERRY
Staff Attorney
ELECTRONIC FRONTIER FOUNDATION
454 Shotwell Street
San Francisco, CA 94110
(415) 436-9333

Attorneys for Amicus Curiae

191B

(33)

No. 04-1350

FILED
OCT 16 2006
OFFICE OF THE CLERK
SUPREME COURT, U.S.

IN THE

Supreme Court of the United States

KSR INTERNATIONAL CO.,
Petitioner,

vs.

TELEFLEX, INC. and
TECHNOLOGY HOLDING CO.,
Respondents.

ON WRIT OF CERTIORARI TO THE
UNITED STATES COURT OF APPEALS
FOR THE FEDERAL CIRCUIT

BRIEF OF FALLBROOK TECHNOLOGIES, INC.; INTELLECTUAL VENTURES; ELLSWORTH INTERNATIONAL, INC.; GE02 TECHNOLOGIES, INC.; MOBILE PRODUCTIVITY, INC.; COMPOSITE TECHNOLOGY INTERNATIONAL, INC.; SKYLER TECHNOLOGY, INC.; PRIVATE MANAGEMENT, INC.; TECHNOLOGY, PATENTS & LICENSING, INC.; AND INTERMUNE, INC. AS *AMICI CURIAE* IN SUPPORT OF RESPONDENTS

JUSTIN A. NELSON
BROOKE A.M. TAYLOR
MATTHEW BERRY
SUSMAN GODFREY L.L.P.
1201 Third Avenue, Suite 3800
Seattle, Washington 98101-3000
(206) 516-3880
Counsel for Amicus Curiae
Intellectual Ventures

DON W. MARTENS
Counsel of Record
KNOBBE MARTENS
OLSON & BEAR LLP
2040 Main Street, 14th Floor
Irvine, California 92614-3641
(949) 760-0404
Counsel for Amici Curiae

Lawyers Brief Service • Appellate Brief Printers • (213) 613-1013 • (949) 720-1510

TABLE OF CONTENTS

Page Nos.

INTEREST OF THE AMICI 1

SUMMARY OF ARGUMENT 1

ARGUMENT 3

I. PETITIONER'S PROPOSED RULE IS INCONSISTENT WITH FUNDAMENTAL CONCEPTS OF INVENTION AND WITH THE PATENT ACT 3

II. INDEPENDENT INVENTORS AND SMALL BUSINESSES RELY HEAVILY ON A PREDICATABLE PATENT SYSTEM THAT ENCOURAGES INNOVATION 7

III. THE FEDERAL CIRCUIT'S OBVIOUSNESS STANDARD IS A PROPER AND STRAIGHT-FORWARD APPLICATION OF THE STATUTE AND OF THIS COURT'S DECISION IN *GRAHAM V. JOHN DEERE* 12

CONCLUSION 17

TABLE OF AUTHORITIES

Page Nos.

Abbott Labs. v. Andrx Pharm., Inc.,
452 F.3d 1331 (Fed. Cir. 2006)..... 14

Alza Corp. v. Mylan Labs., Inc.,
2006 U.S. App. LEXIS 22616
(Fed. Cir. Sept. 6, 2006)..... 13, 14

C&A Potts Co. v. Creager,
155 U.S. 597 (1895)..... 5

In re Dembiczak,
175 F.3d 994 (Fed. Cir. 1999)..... 12

DyStar Textilfarben GmbH & Co. v. C.H. Patrick Co.,
2006 U.S. App. LEXIS 24642
(Fed. Cir. Oct. 3, 2006)..... 14

Fromson v. Advance Offset Plate,
755 F.2d 1549 (Fed. Cir. 1985)..... 3

In re Gartside,
203 F.3d 1305 (Fed. Cir. 2000)..... 12

Graham v. John Deere Co.,
383 U.S. 1 (1966)..... 2, 10, 15, 16

In re Johnston,
435 F.3d 1381 (Fed. Cir. 2006)..... 13

Princeton Biochemicals, Inc. v. Beckman Coulter, Inc.,
411 F.3d 1332 (Fed. Cir. 2005)..... 13

TABLE OF AUTHORITIES
(Cont'd.)

Page Nos.

Reiner v. I. Leon Co.,
285 F.2d 501 (2d Cir. 1960) 3

In re Raynes,
7 F.3d 1037 (Fed. Cir. 1993) 13

Ruiz v. A.B. Chance Co.,
234 F.3d 654 (Fed. Cir. 2000) 13, 16

Ruiz v. A.B. Chance Co.,
357 F.3d 1270 (Fed. Cir. 2004) 13, 14

In re Rouffet,
149 F.3d 1350 (Fed. Cir. 1998) 14

Warner-Jenkinson Co. v. Hilton Davis Chem. Co.,
520 U.S. 17 (1997) 15

STATUTES

35 U.S.C. § 103 ..... 2, 5, 6, 7, 11

35 U.S.C. § 282 ..... 3, 6, 16

OTHER AUTHORITIES

Paul Rose, *Balancing Public Market Benefits And Burdens For Smaller Companies Post Sarbanes-Oxley*,
41 Willamette L. Rev. 707 (2005) 8

TABLE OF AUTHORITIES
(Cont'd.)

Page Nos.

Richard S. Gruner, *Corporate Patents: Optimizing Organizational Responses To Innovation Opportunities and Invention Discoveries*, 10 Marq. Intell. Prop. L. Rev. 1 (2006) 9

J. Goodwin, Otis: *Giving Rise to the Modern City* (2001) 5

"*Patent Trolls: Fact or Fiction?*" Hearing before the Subcomm. on Courts, the Internet, and Intellectual Property of the H. Comm. on the Judiciary, 109th Cong., Second Session 12-13 (June 15, 2006) (Serial No. 109-104) (Testimony of Dean Kamen, President, DEKA Research & Development Corporation) 8

Mark A. Lemley, *Reconceiving Patents in the Age of Venture Capital*, 4 J. Small & Emerging Bus. L. 137 (2000) 9

Small Business Administration, Office of Advocacy, The Small Business Economy 187 (2005) 8

The Scientist Speculates: An Anthology of Partly-Baked Ideas (Irving John Good, Alan James Mayne, & John Maynard Smith, eds., Basic Books 1962) 4

H. Markey, *Why Not the Statute?*, 65 J. Pat. Off. Soc'y 331 (1983) 3, 9

INTEREST OF THE AMICI

Amici are small companies that rely on the patent system to protect their innovations.[1] These companies believe that while it is important not to over-patent, it is just as important to properly motivate inventors and companies by ensuring that the patent system adequately protects innovation. A change to the obviousness standard – especially a change unbounded by objective criteria – will lead to fewer patents for deserving inventions. Small companies will be less willing to invest in research and development if the patent system does not adequately protect their inventions.

A full list of *amici* appears in the Appendix.

SUMMARY OF ARGUMENT

Virtually all inventions are combinations of old ideas. From the simple lever, wedge, and bearing that make up nearly all mechanical inventions to the four chemical sub-units that make up all DNA, pre-existing materials can be combined in new ways to form new products and innovations. Inventions happen when the inventor finally figures out how to put together the puzzle from existing pieces. The act of invention resides in selecting the known pieces that can form a solution to the problem presented.

Petitioner's proposed rule fails to recognize this fundamental fact. Petitioner proposes that all inventions

---

[1] No counsel for a party authored this brief in whole or in part, and no party made a monetary contribution to this brief other than *amici curiae* and their counsel. Both parties have filed blanket letters of consent with the Clerk.

that are "mere" combinations of old elements should be presumed invalid, with the burden on the patent owner to show that a component of the invention performs some new and synergistic result. Yet, the "mere" combinations that Petitioner criticizes constitute almost every invention. Thus, Petitioner's proposed rule would create a presumption that nearly every issued patent is invalid. This is directly contrary to Section 282 of the Patent Act, which unambiguously declares that all patents are presumptively valid.

Petitioner also proposes that all inventions should be declared unpatentable unless they are "extraordinary" and "beyond the capabilities" of a person of ordinary skill in the art. This, too, is contrary to the Patent Act, which expressly allows for patents on inventions that are within the capabilities of a person of ordinary skill in the art, as long as they are not "obvious" to such a person. 35 U.S.C. § 103. Persons of ordinary skill are not disqualified from earning patents.

Petitioner's proposed rule also would make it much more difficult to obtain and defend a patent because Patent Examiners, judges and juries would have very little basis upon which to judge whether an invention is "obvious." Indeed, Petitioner candidly proposes replacing objective evidence of obviousness with the uninformed gut reaction of the finder of fact and unbridled subjectivity based upon hindsight reconstruction of the invention.

In contrast, the Federal Circuit's rule and the decision below flow from the statute and from this Court's decision in *Graham v. John Deere Co.*, 383 U.S. 1 (1966). The Federal Circuit's rule recognizes that, to invalidate a patent, a defendant must produce actual evidence of obviousness, not simply speculation and conjecture.

Congress' statutory presumption that issued patents are presumed valid, 35 U.S.C. § 282, demands no less.

A judicial change to the statutory obviousness standard would be especially harmful to small businesses and independent inventors. They rely on the patent system to protect their innovations. While large firms might possess market power or brand identification and may control the distribution channels or supply bases, small firms and independent inventors have only ideas and the protection for those ideas afforded by patents. The patent system should protect true invention, and its rules should be consistent with the inventive process and the mandate of Congress. Petitioner's proposed rule is contrary to these goals, whereas the Federal Circuit rule embraces them.

ARGUMENT

I. PETITIONER'S PROPOSED RULE IS INCONSISTENT WITH FUNDAMENTAL CONCEPTS OF INVENTION AND WITH THE PATENT ACT

Nearly all inventions combine old elements in new ways. As Judge Learned Hand observed, "substantially every invention" is a "combination[] of old elements." *Reiner v. I. Leon Co.*, 285 F.2d 501, 503 (2d Cir. 1960) (Hand, L.). "Only God works from nothing. Men must work with old elements." *Fromson v. Advance Offset Plate*, 755 F.2d 1549, 1556 n.3 (Fed. Cir. 1985) (quoting H. Markey, *Why Not the Statute?*, 65 J. Pat. Off. Soc'y 331, 333-34 (1983)). Inventions happen by seizing upon connections that others missed. Many times, all the pieces of the puzzle are staring at everyone of ordinary skill in the art. But nobody solves the problem, often despite remarkable efforts, until finally an inventor seizes upon the moment of clarity and realizes how the pieces should fit

together. As Nobel laureate Albert Szent-Gyorgyi famously observed, "[d]iscovery consists in seeing what everyone else has seen and thinking what no one else has thought." *The Scientist Speculates: An Anthology of Partly-Baked Ideas* 15 (Irving John Good, Alan James Mayne, & John Maynard Smith, eds., Basic Books 1962).

This tenet that nearly everything new is a combination of something old is just as basic outside the context of inventions. The DNA of every human being is composed of various combinations of only four chemical sub-units. Indeed, all compositions of matter, and thus all patented chemical inventions, are necessarily a combination of old elements – all neatly listed on the Periodic Table of Elements. And all words in the English language, along with all resulting articles, briefs, and plays, are combinations of the same 26 letters.

Small businesses and independent inventors are especially attuned to, and positioned to take advantage of, the fact that all inventions build off each other and the tools that are currently available to them. The Eureka moment may occur at 2:00 a.m. when an inventor who has been grappling with potential solutions to a problem realizes the simple reconfiguration of known parts necessary to most elegantly overcome that problem. Other times, it may occur when the inventor is discussing the problem with colleagues. But in all cases, inventors rely on the ideas of others that exist at the time of their inventions, applying them and studying them to solve difficult problems.

The more elegant the invention, the more it may appear obvious in hindsight. Many times, the best inventions are the ones that are so simple that people of ordinary skill in the art ask themselves, "Why didn't I think of that?" As this Court observed long ago:

> The apparent simplicity of a new device often leads an inexperienced person to think that it would have occurred to any one familiar with the subject; but the decisive answer is that, with dozens and perhaps hundreds of others laboring in the same field, it had never occurred to any one before.

C&A Potts Co. v. Creager, 155 U.S. 597, 608 (1895). The stroke of genius comes from molding old parts in new ways.

To take an example from the 19th Century, the Patent and Trademark Office granted Elisha Otis U.S. Patent No. 31,128 for his invention of an elevator with a braking system that prevented an elevator from falling if the elevator cable broke. This invention revolutionized the elevator industry and has been credited with making modern cities possible. Otis' invention was basic, and in hindsight, perhaps obvious. He applied two simple known elements, an elevator and a brake, to create a new product. Yet the market recognized the importance of the invention and embraced the solution precisely because it was so simple and elegant. *See generally* J. Goodwin, Otis: *Giving Rise to the Modern City* (2001).

All inventors in all eras create something new by adding together existing parts and sculpting them in novel ways. In its obviousness standard, Congress has recognized this fact by focusing the question of obviousness on the person of ordinary skill in the art and by applying the standard of obviousness to all inventions without exception, including those that Petitioner derides as "mere" combinations. 35 U.S.C. § 103.

Petitioner and its supporters nevertheless propose that all patents directed to "mere combinations of old elements" should be presumed invalid in the absence of an extraordinary showing of synergistic new results by the patent owner. Pet. Br. at 21-24, 43. The United States even refers explicitly to a "presumption" of invalidity for combination patents.[2] Brief of U.S. at 28 n.14. However, the plain text of the Patent Act requires precisely the opposite presumption, expressly providing that "[a] patent shall be presumed valid." 35 U.S.C. § 282. The statute creates no exception for combination patents or any other patents. The Court should reject Petitioner's invitation to rewrite the statute – a rewrite so extreme that it would replace the statute with its own antithesis.

Petitioner seeks to depart from the statute in another way. Section 103 of the Patent Act states that an invention is not patentable "if the differences between the subject matter sought to be patented and the prior art are such that the subject matter as a whole would have been *obvious* at the time the invention was made *to a person having ordinary skill in the art.*" 35 U.S.C. § 103(a) (emphasis added). Petitioner and its *amici*, however, would discard this statutory language in favor of much more stringent language. Petitioner, for example, repeatedly urges this Court to hold that an invention is unpatentable if "a person having ordinary skill in an art would have been *capable* of adapting existing technology to achieve a desired result." Pet. Br. at 25 (emphasis in original). *See also id.* at 16. The United States similarly argues that an invention should

---

2 The United States' endorsement of a categorical presumption of invalidity for all combination patents is somewhat surprising in light of the United States' repeated recognition that this Court should not adopt a "rigid," "inflexible," or "categorical" test for patentability. *See* Brief of U.S. at 16, 17, 23.

not be patentable unless it "manifests the *extraordinary* level of innovation, *beyond the capabilities* of a person having ordinary skill in the art." Brief of U.S. at 10 (emphasis added). *See also id.* at 15 (arguing an invention is unpatentable unless it is "beyond what a person of ordinary skill ... could have achieved at the time of the invention").

The statute, however, does not in any way suggest that an invention is unpatentable unless it is "beyond the capabilities" of a person of ordinary skill in the art – and for good reason. Such a rule, if adopted, would call into question the validity of virtually every single patent. Every invention ever made by a person of ordinary skill in the art, by definition, is within the *capability* of a person of ordinary skill in the art. The question simply is not, as Petitioner would have it, one of *capacity*. It is whether a person of ordinary skill in the art, at the time of the invention, would have found the invention *obvious*. Moreover, Petitioner's rule would make the validity inquiry turn on the credentials of the inventor, rather than the merits of the invention. This Court should not adopt the rule of Petitioner and its *amici*, as their solution directly contradicts the text of 35 U.S.C. § 103 and runs contrary to the process of invention.

II. INDEPENDENT INVENTORS AND SMALL BUSINESSES RELY HEAVILY ON A PREDICATABLE PATENT SYSTEM THAT ENCOURAGES INNOVATION

Unlike larger companies, which can rely primarily upon brand identification, market power, access to capital, and a host of other advantages, small companies and independent inventors depend upon the patent system for survival. Dean Kamen, inventor of the portable insulin

pump and the Segway scooter, recently testified before Congress on this very point:

> My concern is when I walk into that big company they've got marketing, they've got distribution, they've got everything. If I show them what I have got, the only thing that I have on my side of the table is that patent; and the only way to convince them that they should commit the huge resources to turn that into a product is to be able to say that I can deliver this to you in return for supporting this product and you singularly are going to have to pay for the development and introduction. You singularly – you exclusively will have the right for some period of time to do this.[3]

Moreover, small firms contribute disproportionately to innovation and invention. "Small firm innovation is . . . substantially more high-tech or leading edge" than large firm innovation, and "[s]mall firms are more effective in producing high-value innovations." Small Business Administration, Office of Advocacy, The Small Business Economy 187 (2005), available at http://www.sba.gov/advo/research/sb_econ2005.pdf. Indeed, "small businesses produced 13 to 14 times more patents per employee than large patenting companies." Paul Rose, *Balancing Public Market Benefits And Burdens For Smaller Companies Post*

---

3 "Patent Trolls: Fact or Fiction?" Hearing before the Subcomm. on Courts, the Internet, and Intellectual Property of the H. Comm. on the Judiciary, 109th Cong., Second Session 12-13 (June 15, 2006) (Serial No. 109-104) (Testimony of Dean Kamen, President, DEKA Research & Development Corporation) available at http://judiciary.house.gov/media/pdfs/printers/109th/28201.pdf.

Sarbanes-Oxley, 41 Willamette L. Rev. 707, 736 (2005) (citing Small Business Administration, Office of Advocacy, Small Business by the Numbers, available at http://www.sba.gov/advo/stats/sbfaq.pdf (last modified June 2004)).

Small businesses and independent inventors need the patent system to raise the capital necessary to perfect and market their inventions. *See, e.g.*, Richard S. Gruner, *Corporate Patents: Optimizing Organizational Responses To Innovation Opportunities and Invention Discoveries*, 10 Marq. Intell. Prop. L. Rev. 1, 11 (2006); Mark A. Lemley, *Reconceiving Patents in the Age of Venture Capital*, 4 J. Small & Emerging Bus. L. 137, 143 (2000) ("Venture capitalists love patents . . . ."); *see also id.* at 144. Venture capitalists and other investors would be unwilling to invest in a company whose ideas can be copied freely.

Petitioner's proposed rule would make it much more difficult for small companies and independent inventors to obtain patents on their inventions. As Chief Judge Markey observed shortly after formation of the Federal Circuit: "Because virtually *all* inventions are 'combinations,' and because *every* invention is formed of 'old elements,'" a rule against combination patents "would destroy the system." H. Markey, *Why Not the Statute?*, 65 J. Pat. Off. Soc'y 331, 333-34 (1983) (emphasis in original).

Petitioner's proposal would be particularly harmful to individual inventors and small businesses during the patent application process. Under Petitioner's proposal, inventors would be required to present evidence of a synergistic new function, presumably through expert testimony. However, before receiving their patent, inventors and small businesses are unlikely to have the

resources needed to procure expert testimony. Similarly, most small inventors would be unable to present the PTO with affirmative evidence of patentability, such as the commercial success of the invention. *See Graham*, 383 U.S. at 17-18 (explaining that commercial success is evidence of non-obviousness). An invention cannot be a commercial success until it has actually been manufactured and marketed by the inventor. However, small businesses often lack the resources to market their product until they have received their patent and the investment funding that often follows.

Small businesses with issued patents would not be immune from the effects of Petitioner's proposal. Petitioner's proposed statutory departures would be both prospective and retroactive, thus subjecting all issued patents to new attacks under Petitioner's new standards. Indeed, if Petitioner were to prevail, the PTO likely would be overwhelmed with requests to re-examine issued patents based upon this more demanding judge-made obviousness standard. Small businesses and independent inventors would suffer disproportionately from such a rule, both because of their dependence on patents and their financial inability to defend their entire patent portfolio in costly re-examination proceedings.

In addition, the patent process needs certainty, especially from the perspective of a small business or independent inventor who is trying to convince an investor that the PTO will approve the patent application. Petitioner's proposed rule would destroy certainty for every patent which can be characterized as a combination of old elements – in other words, almost all patents. For this enormous class of patents, Petitioner candidly urges this Court to substitute judicial gut reaction for evidence. According to Petitioner, a judge or jury should simply look

at the patent and the prior art and, without the benefit of any further evidence, decide the issue of obviousness based upon "the formation of a judgment whether the claimed subject matter was, at the time of its conception, beyond the skill of the calling." Pet. Br. at 38. However, judgment without evidence is not judgment at all. A court's "judgment" that it would or would not be obvious to combine a specific known gene with a specific known cell, for example, is nothing but an uninformed guess unless based upon evidence. Without objective standards, each side in litigation will find an expert to opine on obviousness, with one saying "It is obvious," and the other saying, "No, it is not obvious," based on subjective criteria, hindsight, or mere conclusory assertion.

Judicially modifying the statutory obviousness standard would harm the patent system in another way. In most cases, new inventions do not revolutionize an industry; rather they change the field one improvement at a time until the product of today looks nothing like the product of one hundred years ago. Today's new Boeing 787, for example, is completely different from the Wright Brothers' biplane of 1903. This dramatic change over time occurred mostly in small steps. Many of those small steps were not obvious at the time and properly warranted patent protection under 35 U.S.C. § 103. These improvement patents are often just as important as the first patent in the field. They are significant improvements, neither intuitive nor obvious to the first inventors, which make the original invention more useful, more efficient, cheaper, or simpler.

Moreover, changing the obviousness standard to bar patentability for important but incremental innovations would have a disproportionate impact on small businesses and independent inventors because they rely on the patent system more than large companies to protect their

investments. All *amici* on this brief believe strongly that it is important not to over-patent, and that only those inventions that are novel and non-obvious innovations deserve the reward of a patent for their efforts. But the *amici* here believe equally strongly that it is vitally important to give inventors the proper incentives to invent and to create new products, processes, machines, and improvements that would not have been obvious at the time to a person of ordinary skill in the art.

The Federal Circuit's current case law, like the Patent Act itself, carefully balances these competing interests. Petitioner's proposed rule, in contrast, would make it more difficult to patent new and non-obvious inventions, upend this balance, and create a regime that does not adequately reward innovation. All patent owners benefit from patents of a higher quality. Thus, it is critical that the obviousness standard is clear and consistently observed in the courts and in the Patent Office — goals unattainable under the tests proposed by Petitioner.

III. THE FEDERAL CIRCUIT'S OBVIOUSNESS STANDARD IS A PROPER, OBJECTIVE AND STRAIGHTFORWARD APPLICATION OF THE STATUTE AND OF THIS COURT'S DECISION IN *GRAHAM V. JOHN DEERE*

Consistent with the Patent Act, the Federal Circuit has correctly required "actual evidence" of obviousness to invalidate a patent. *In re Dembiczak*, 175 F.3d 994, 999 (Fed. Cir. 1999) *abrogated on other grounds by In re Gartside*, 203 F.3d 1305 (Fed. Cir. 2000). As the Federal Circuit has recently emphasized, the determination of obviousness "should be based on evidence rather than on mere speculation or conjecture." *Alza Corp. v. Mylan*

Labs., Inc., 2006 U.S. App. LEXIS 22616 at *8-*9 (Fed. Cir. Sept. 6, 2006).

Under Federal Circuit precedent, evidence of obviousness can take many forms. For example, where the patented invention is a combination of old elements, the evidence of obviousness may take the form of expert testimony providing evidence of why it would have been obvious to combine the elements as claimed in the patent. *See, e.g., Alza Corp.*, 2006 U.S. App. LEXIS 22616 at *20; *Princeton Biochemicals, Inc. v. Beckman Coulter, Inc.*, 411 F.3d 1332, 1338 (Fed. Cir. 2005). Even without expert testimony, the similarity between two prior art references may also be evidence that it would have been obvious to combine the features disclosed in those references. *Ruiz v. A.B. Chance Co.*, 357 F.3d 1270, 1276-77 (Fed. Cir. 2004). In addition, the ubiquitous use of an element in various applications is evidence that it would have been obvious to use that element in a particular combination. *In re Raynes*, 7 F.3d 1037, 1039-40 (Fed. Cir. 1993). Similarly, the known interchangeability of one element for another is evidence of obviousness. *In re Johnston*, 435 F.3d 1381, 1385-86 (Fed. Cir. 2006). Furthermore, evidence of the simple nature of the problem confronting the inventor may suggest that the inventor's solution was obvious. *Princeton Biochemicals, Inc.*, 411 F.3d at 1338-39. And, of course, the prior art itself may explicitly suggest or teach the inventor's claimed combination. *Ruiz v. A.B. Chance Co.*, 234 F.3d 654, 665 (Fed. Cir. 2000).

Contrary to Petitioner's argument, however, the Federal Circuit does not require defendants challenging a patent to come forward with a published prior art document that explicitly teaches or suggests the creation of the claimed invention. The Federal Circuit has unequivocally rejected "a rule of law that an express, written motivation

to combine must appear in prior art references before a finding of obviousness." *Ruiz*, 357 F.3d at 1276; *see also Alza Corp.*, 2006 U.S. App. LEXIS 22616 at *9-*10; *DyStar Textilfarben GmbH & Co. v. C.H. Patrick Co.*, 2006 U.S. App. LEXIS 24642 at *11-*12 (Fed. Cir. Oct. 3, 2006).

Regardless of the specific verbal formula used in any particular case, the ultimate standard applied by the Federal Circuit is simply that the challenger come forward with actual evidence that it would have been obvious to a person of ordinary skill in the art to create the claimed invention; and that presumptions, hindsight, and judicial gut reaction are no substitute for actual evidence. Indeed, the Federal Circuit has made clear that the requirement of a "teaching," "suggestion," "motivation," "incentive," or "reason" to combine prior art elements is simply a restatement of the fundamental requirement that there be some actual evidence that it would have been obvious to combine the elements of the prior art to make the claimed invention.[4] As this Court has observed in a comparable patent law context, "the particular linguistic framework used is less important than whether the test is probative of

---

[4] *See, e.g., Abbott Labs. v. Andrx Pharm., Inc.*, 452 F.3d 1331, 1336 (Fed. Cir. 2006) (explaining that the so-called "motivation-suggestion-teaching test" merely asks "whether a person of ordinary skill in the art, possessed with the understandings and knowledge reflected in the prior art, and motivated by the general problem facing the inventor, would have been led to make the combination recited in the claims."); *In re Rouffet*, 149 F.3d 1350, 1357 (Fed. Cir. 1998) (a "motivation to combine" is established through evidence of "reasons that the skilled artisan, confronted with the same problems as the inventor and with no knowledge of the claimed invention, would select the elements from the cited prior art references for combination in the manner claimed").

the essential inquiry." *Warner-Jenkinson Co. v. Hilton Davis Chem. Co.*, 520 U.S. 17, 39-40 (1997).

Similarly, the Federal Circuit's approach is consistent with this Court's decision in *Graham v. John Deere Co.*, 383 U.S. 1 (1966). *Graham* demands actual evidence that it would have been obvious to modify the prior art to create the claimed invention. In *Graham*, this Court explained the "basic factual inquiries" that underlie a determination of obviousness. These include "the scope and content of the prior art," "differences between the prior art and the claims at issue," and "the level of ordinary skill in the pertinent art." *Id.* at 17.

These three basic factors lend themselves to a natural progression of analysis. First, the pertinent prior art is identified and then compared to the claimed invention. This will reveal the magnitude of the differences or "gap" between the prior art and the claimed invention. Second, the level of skill in the art is determined. This inquiry provides at least some input regarding the capacity of ordinary persons in the field to make changes to the prior art.

Third is the question presented here and presented by almost all patents -- whether it would have been obvious for such a person of ordinary skill in the art to bridge that gap and make the claimed invention. *Graham* specifically contemplates that the court will receive evidence probative of whether the identified person of ordinary skill in the art would have found it obvious to bridge the gap between the prior art and the claimed invention. The decision does not suggest that judges and juries should make this determination through legal presumption, judicial hunch, or a coin-flip. Indeed, an entire section of the *Graham* decision, entitled "The Obviousness of the Differences,"

details the evidence on which this Court relied to conclude that the identified differences would have been obvious to a person of ordinary skill in the art. *Graham*, 383 U.S. at 24-26. This Court relied first on the very simple nature of the problem confronting the inventor, concluding that merely stating the problem revealed the solution.[5] *Id.* at 24-25. In addition, the Court relied upon testimony from the patentee's own expert supporting the finding of obviousness. *Id.* at 24 n.12. Based upon this evidence, this Court upheld the finding of obviousness.

The Federal Circuit's obviousness jurisprudence flows directly from *Graham*. Per *Graham*'s mandate, the Federal Circuit's decisions uniformly identify the scope and content of the prior art, the differences between the prior art and the claimed invention, and the level of skill in the art. *See, e.g., Ruiz v. A.B. Chance Co.*, 234 F.3d 654, 662-68 (Fed. Cir. 2000). The Federal Circuit's decisions then demand affirmative evidence why the identified person of skill in the art would have found it obvious to modify the prior art to make the claimed invention. *See, e.g., id.* at 667. For issued patents, such as the one at issue in the present case, Congress' presumption of validity demands no less. *See* 35 U.S.C. § 282.

The Federal Circuit's decision below was a straightforward application of a standard in tune with the policies of Congress, the decisions of this Court, and the very nature of invention itself. This Court should not make the drastic change that Petitioner and its *amici* propose.

---

[5] Specifically, this Court found that the problem of permitting a shank to flex over its full length cried out for the solution of moving the shank away from a component that inhibited flexing. *Graham*, 383 U.S. at 24-25, 86 S. Ct. 697.

CONCLUSION

This Court should affirm the judgment below.

Respectfully submitted,

JUSTIN A. NELSON
BROOKE A.M. TAYLOR
MATTHEW R. BERRY
SUSMAN GODFREY L.L.P.
1201 Third Ave.,
Suite 3800
SEATTLE, WA 98101-3000
(206) 516-3880

Counsel for Amicus Curiae Intellectual Ventures

DON W. MARTENS
Counsel of Record
KNOBBE MARTENS
OLSON & BEAR LLP
2040 Main Street, 14th Floor
Irvine, CA 92614-3641
(949) 760-0404

Counsel for Amici Curiae

October 16, 2006

APPENDIX

APPENDIX

The following is a complete list of the *amici curiae* who are submitting this brief:

1. Fallbrook Technologies Inc.
2. Intellectual Ventures
3. Ellsworth International Inc.
4. GEO2 Technologies, Inc.
5. Mobile Productivity, Inc.
6. Composite Technology International, Inc.
7. Skyler Technology, Inc.
8. Private Management, Inc.
9. Technology, Patents & Licensing, Inc.
10. Intermune, Inc.

3015536:101306

135

No. 04-1350

FILED
OCT 16 2006
OFFICE OF THE CLERK
SUPREME COURT, U.S.

IN THE

Supreme Court of the United States

KSR INTERNATIONAL CO.,

Petitioner,

v.

TELEFLEX INC. and
TECHNOLOGY HOLDING CO.,

Respondents.

ON WRIT OF CERTIORARI TO THE
UNITED STATES COURT OF APPEALS
FOR THE FEDERAL CIRCUIT

BRIEF AMICUS CURIAE OF THE FEDERAL CIRCUIT BAR ASSOCIATION IN SUPPORT OF RESPONDENTS

FRANK A. ANGILERI
BROOKS KUSHMAN P.C.
1000 Town Center
Twenty-Second Floor
Southfield, Michigan 48075
(248) 358-4400

Attorneys for Amicus Curiae

204056

COUNSEL PRESS
(800) 274-3321 • (800) 359-6859

TABLE OF CONTENTS

Page

Table of Cited Authorities iii

Interest of the *Amicus Curiae* 1

Summary of Argument 1

Argument 3

I. The Standard For Patentability Of A New And Useful Invention 3

II. The Obviousness Analysis Should Include A Systematic Restraint On The Use Of Hindsight Knowledge Of The Invention 5

A. The Statutory Standard, "Obvious At The Time The Invention Was Made To A Person Having Ordinary Skill In The Art," Inherently Raises A Hindsight Issue 5

B. A Systematic Restraint On The Use Of Hindsight Is A Necessary Part Of The Obviousness Analysis 7

C. Section 103 Prohibits Hindsight, But The *Graham* Test Does Not Specifically Address It 9

Contents

Page

III. The Federal Circuit's Teaching-Suggestion-Motivation Test Provides A Systematic Restraint On The Improper Use Of Hindsight That Is Consistent With The Statute, Precedent, And Good Policy 11

A. The Federal Circuit Uses The Teaching-Suggestion-Motivation Test As A Systematic Restraint On The Improper Use Of Hindsight In An Obviousness Analysis 11

B. The Teaching-Suggestion-Motivation Test Is Consistent With The Statute ... 12

C. The Teaching-Suggestion-Motivation Test Is Consistent With This Court's Precedent 14

D. The Teaching-Suggestion-Motivation Test Is Consistent With Good Policy Because It Restrains Improper Hindsight 15

E. Abolishing The Teaching-Suggestion-Motivation Test Will Not Solve The Problems Raised By The Petitioner And *Amici*, And Will Create Larger Problems By Unleashing Hindsight 16

Conclusion 18

TABLE OF CITED AUTHORITIES

Page

CASES

ATD Corp. v. Lydall Inc.,
159 F.3d 534 (Fed. Cir. 1998) 13

Alza Corp. v. Mylan Labs, Inc.,
2006 WL 2556356 (Fed. Cir. 2006) 13

Anderson's-Black Rock v. Pavement Co.,
396 U.S. 57 (1969) 14, 15

In re Application of Franz Bergel and John Albert Stock,
292 F.2d 955 (CCPA 1961) 14

In re Application of Harry Sponnoble,
405 F.2d 578 (CCPA 1969) 14

In re Application of Manuel F. Leonor,
395 F.2d 801 (CCPA 1968) 14

In re Application of Philip A. Schaffer, Jr.,
229 F.2d 476 (CCPA 1956) 14

Cross Med. Prods. Inc. v. Medtronic Softamor Danek, Inc.,
424 F.3d 1293 (Fed. Cir. 2005) 12

In re Dembiczak,
175 F.3d 994 (Fed. Cir. 1999) 10, 11

Cited Authorities

Page

In re Deminski,
796 F.2d 436 (Fed. Cir. 1986) 10

Diamond Rubber Co.
v. Consolidated Rubber Tire Co.,
220 US 428 (1911) 6, 15

Dystar Textilfarben GmbH & Co.
Deutschland KG v. C.H. Patrick Co.,
2006 WL 2806466 (Fed. Cir. 2006) 12, 13

Ecolochem, Inc. v. Southern Calif. Edison Co.,
227 F.3d 1361 (Fed. Cir. 2000) 12, 13

In re Fine,
837 F.2d 1071 (Fed. Cir. 1988) 8

In re Fridolph,
134 F.2d 414 (CCPA 1943) 14

Fromson v. Advance Offset Plate,
755 F.2d 1549 (Fed. Cir. 1985) 15

Gillette Co. v. S.C. Johnson & Son, Inc.,
918 F.2d 720 (Fed. Cir. 1990) 6, 13

Graham v. John Deere Co.,
383 U.S. 1 (1966) ..... *passim*

In re Jones,
958 F.2d 347 (Fed. Cir. 1992) 12

Cited Authorities

Page

In re Kahn,
441 F.3d 977 (Fed. Cir. 2006) 10, 12, 13

McGinley v. Franklin Sports, Inc.,
262 F.3d 1339 (Fed. Cir. 2001) 9, 12

Motorola, Inc. v. Interdigital Technology Corp.,
121 F.3d 1461 (Fed. Cir. 1997) 12, 13

In re Nilssen,
851 F.2d 1401 (Fed. Cir. 1988) 12

Ormoco Corp. v. Align Technology, Inc.,
2006 WL 2493245 (Fed. Cir. 2006) 13

Para-Ordnance Mfg., Inc.
v. SGS Importers, Int'l, Inc.,
73 F.3d 1085 (Fed. Cir. 1995) 13

Pearl v. Ocean Mills,
2 Bann. & Ard. 469, Fed. Cas. No. 10,876,
11 Off. Gaz. 2 6

Richardson-Vicks, Inc. v. Upjohn Co.,
122 F.3d 1476 (Fed. Cir. 1997) 13

Ryco, Inc. v. Ag-Bag Corp.,
857 F.2d 1418 (Fed. Cir. 1988) 13

SIBIA Neurosciences, Inc. v. Cadus Pharm. Corp.,
225 F.3d 1349 (Fed. Cir. 2000) 13

Cited Authorities

Page

Sakraida v. Ag Pro, Inc.,
425 U.S. 273 (1976) 14, 15

In re Sernaker,
702 F.2d 989 (Fed. Cir. 1983) 12, 14

Stratoflex, Inc. v. Aeroquip Corp.,
713 F.2d 1530 (Fed. Cir. 1983) 15

Yamanouchi Pharm. Co.
v. Danbury Pharmacal, Inc.,
231 F.3d 1339 (Fed. Cir. 2000) 13

STATUTES

35 U.S.C. § 101 3

35 U.S.C. § 102 ..... 3, 10

35 U.S.C. § 103(a) 3, 4, 9, 10

MISCELLANEOUS

National Research Council of the National Academies, *A Patent System for the 21st Century* (Stephen A. Merrill et. al. eds. 2004) 8, 15, 16

U.S. Federal Trade Commission, *To Promote Innovation: The Proper Balance Of Competition And Patent Law And Policy* (2003) 8, 16

INTEREST OF THE *AMICUS CURIAE*

The Federal Circuit Bar Association ("FCBA") is a national organization for the bar of the United States Court of Appeals for the Federal Circuit.[1] The FCBA was organized to unite the different groups who practice within the legal community of the Federal Circuit. The FCBA offers a forum for common concerns and dialogue between bar and court, government counsel and private practitioner, litigator, and corporate counsel. The members come from all areas of practice and represent all types of litigants, large and small, corporate and private.

The FCBA has an interest in an objective and consistent application of the statutory obviousness standard. The FCBA is concerned that the relief sought by Petitioner would render the obviousness analysis more subjective and uncertain, to the detriment of the United States patent system and, potentially, the economy.

SUMMARY OF ARGUMENT

The obviousness analysis is inherently difficult. The statute requires that obviousness be determined "at the time the invention was made," but the decision-maker is asked to determine obviousness after the invention has been made and with full knowledge of the invention. The hypothetical person having ordinary skill in the art is confronted with the same

---

1. The parties to this proceeding have filed with the Clerk of the Court blanket consents to all *amicus curiae* briefs. Pursuant to Rule 37.6, *amicus curiae* states that no counsel for a party authored this brief in whole or in part, and no person other than the *amicus curiae*, its members, or its counsel made a monetary contribution to the preparation or submission of this brief.

problem as was the inventor, and does not know the inventor's solution "at the time the invention was made" – but the decision-maker does. A problem always looks easier once one knows the answer. It is difficult, if not impossible, for a decision-maker to divorce him/herself of knowledge of the invention when deciding whether it would have been obvious. This inherent conflict is known as the "hindsight" problem.

This Court has recognized the seriousness of the hindsight problem for the past 100 years. More recently, two independent studies of patent policy, by the Federal Trade Commission and the National Academies of Sciences, recognized the significance of the hindsight problem, and the need to address it.

The statutory requirement to determine obviousness "at the time the invention was made" forbids the use of hindsight but that does not solve the problem. Likewise, case law telling the decision-maker not to use hindsight does not and cannot eliminate the invention from the decision-maker's mind. To be objective, consistent, and reliable, the obviousness analysis needs a systematic restraint on the use of hindsight, as required by the statute. The Federal Circuit's teaching, suggestion or motivation test provides appropriate and necessary restraint on the improper use of hindsight.

The teaching-suggestion-motivation test is consistent with the statutory standard and with this Court's precedent. The teaching-suggestion-motivation test complements the three part *Graham* test, and reinforces the "uniformity and definiteness" sought in *Graham*. Finally, the criticisms of the teaching-suggestion-motivation test raised by the Petitioner and *amici* are not valid.

For these reasons, the FCBA advocates retaining the teaching-suggestion-motivation test.

ARGUMENT

I. THE STANDARD FOR PATENTABILITY OF A NEW AND USEFUL INVENTION IS STATUTORY

The standard for patentability of a new and useful[2] invention is statutory:

> A patent may not be obtained though the invention is not identically disclosed or described as set forth in section 102 of this title, if the differences between the subject matter sought to be patented and the prior art are such that the subject matter as a whole would have been *obvious at the time the invention was made to a person having ordinary skill in the art* to which said subject matter pertains. Patentability shall not be negatived by the manner in which the invention was made.

35 U.S.C. § 103(a) (emphasis added).

By the statutory standard, patentable inventions would not have been *obvious* to a person of *ordinary* skill. The United States argues that an invention is patentable only if it is "beyond what a person of ordinary skill . . . could have achieved," *i.e.*, "required *extraordinary* skill." (Brief for United States, pp. 15, 24 (emphasis in original)). The FCBA

---

2. In addition to the non-obvious requirement at issue on this appeal, a patentable invention must be new (35 U.S.C. § 102) and useful (35 U.S.C. § 101).

submits that this position is incorrect because it is inconsistent with the statute, which expressly allows for invention by persons of ordinary skill or less. In addition, the United States wrongly focuses on the skill of the actual inventor, which is irrelevant. The statutory question is whether the invention, regardless of who made it, would have been obvious, at the time the invention was made, to a hypothetical person of ordinary skill in the art.[3]

This Court is well aware of the "difficulties in applying the nonobviousness test." *Graham*, 383 U.S. at 18. To facilitate "uniformity and definiteness," this Court articulated the three now well-known "basic factual inquiries" underlying the obviousness analysis and stated: "We believe that strict observance of the requirements laid down here will result in that uniformity and definiteness which Congress called for in the 1952 Act." *Id.*

The standard for patentability is statutory and is not at issue in this appeal.[4] The issue is whether the teaching-suggestion-motivation test, in conjunction with *Graham*'s three "basic factual inquiries," properly implements the statutory standard of "obvious at the time the invention was made to a person having ordinary skill in the art," and promotes the "uniformity and definiteness" this Court sought in *Graham*.

---

3. In this regard, the statute expressly states that "patent-ability should not be negatived by the manner in which the invention was made." 35 U.S.C. § 103(a); *see also*, *Graham v. John Deere*, 383 U.S. 1, 15 (1966) ("It also seems apparent that Congress intended by the last sentence of § 103 to abolish the test it believed this Court announced in the controversial phrase 'flash of creative genius,'. . .").

4. Some *amici* argue that the standard for patentability is too low, and this Court needs to raise it. Because the standard is statutory, there is no issue of whether it should be raised or lowered.

II. THE OBVIOUSNESS ANALYSIS SHOULD INCLUDE A SYSTEMATIC RESTRAINT ON THE USE OF HINDSIGHT KNOWLEDGE OF THE INVENTION

A. The Statutory Standard, "Obvious At The Time The Invention Was Made To A Person Having Ordinary Skill In The Art," Inherently Raises A Hindsight Issue

In deciding what would have been obvious, the decision-maker inevitably confronts the "hindsight" problem. The decision-maker must assess obviousness "at the time the invention was made," *i.e.*, before anyone knew the invention. Yet, the decision-maker knows the invention. The decision-maker must put him/herself into the shoes of a hypothetical person of ordinary skill, knowing the relevant prior art and the problem that the real inventor faced but not the inventor's solution. The decision-maker must analyze whether that solution would have been obvious to the hypothetical person of ordinary skill who did not know what the decision-maker *does* know. The solution to virtually any problem seems easier, more "obvious," if the answer is known. Every invention necessarily looks at least somewhat less inventive, in hindsight, than it did before the invention was made.

This Court has long recognized the "hindsight" problem:

> Many things, and the patent law abounds in illustrations, seem obvious after they have been done, and, "in the light of the accomplished result," it is often a matter of wonder how they so long "eluded the search of the discoverer and set at defiance the speculations of inventive genius."

> *Pearl v. Ocean Mills*, 2 Bann. & Ard. 469, Fed. Cas. No. 10,876, 11 Off. Gaz. 2. Knowledge after the event is always easy, and problems once solved present no difficulties, indeed, may be represented as never having had any, and expert witnesses may be brought forward to show that the new thing which seemed to have eluded the search of the world was always ready at hand and easy to be seen by a merely skillful attention.

Diamond Rubber Co. v. Consolidated Rubber Tire Co., 220 U.S. 428, 434-35 (1911).

The seriousness of this problem is undisputed. Indeed, the Federal Circuit's quote of Milton's *Paradise Lost*, from 1667, is appropriate:

> The invention all admired, and each how he
> To be the inventor missed; so easy it seemed,
> Once found, which yet unfound most would have thought,
> Impossible !
>
> PARADISE LOST, Part VI, L. 478-501.

Gillette Co. v. S.C. Johnson & Son, Inc., 919 F.2d 720, 726 (Fed. Cir. 1990).

B. A Systematic Restraint On The Use Of Hindsight Is A Necessary Part Of The Obviousness Analysis

Preventing use of hindsight in an obviousness analysis is of paramount importance to the patent system. Two recent policy studies independently recognized the importance of systematically containing the hindsight problem. First, in 2003, the Federal Trade Commission stated:

> The Federal Circuit has repeatedly sought to protect inventors from findings of obviousness based purely on hindsight. "Good ideas may well appear 'obvious' after they have been disclosed, despite having been previously unrecognized." As Judge Newman of the Federal Circuit noted at the Hearings, many patents are attacked on grounds of obviousness. "It's fuzzy ground. It's hard to decide, difficult to administer, even harder to set." Thus, Federal Circuit "case law makes clear that the best defense against the subtle but powerful attraction of a hindsight-based obviousness analysis is rigorous application of the requirement for a showing of the teaching or motivation to combine prior art references." Otherwise, the Federal Circuit has said, "[c]ombining prior art references without evidence of such a suggestion, teaching, or motivation simply takes the inventor's disclosure as a blueprint for piecing together the prior art to defeat patentability – the essence of hindsight." In addition, the Federal Circuit's application of the suggestion test arguably has the virtue of certainty and predictability, and it helps to ensure fulfillment of the PTO's "obligation to

> develop an evidentiary basis for its findings." One can readily see the validity of the Federal Circuit's concerns.

U.S. Federal Trade Commission, *To Promote Innovation: The Proper Balance Of Competition And Patent Law And Policy* (2003) (hereinafter "FTC Report"), Ch. 4, p. 12 (footnotes and citations omitted).

Second, in 2004, the National Research Council of the National Academies stated:

> Every invention at some level is a combination of old elements. Again, experience has shown that truly non-obvious inventions will be denied patent protection unless the decision maker guards against the use of hindsight.

National Research Council of the National Academies, *A Patent System for the 21st Century*, p. 89 (Stephen A. Merrill et. al. eds. 2004) (hereinafter, "National Academies Report") http://www.nap.edu/html/patentsystem/0309089107.pdf (citing *In re Fine*, 837 F.2d 1071 (Fed. Cir. 1988)).

Without a *systematic* restriction on improper use of hindsight, the obviousness question devolves to a highly subjective analysis. Although one can say that he or she is not using hindsight knowledge of the invention, the realities of the obviousness analysis make it nearly impossible for a decision-maker to do so. The invention is the centerpiece of any obviousness analysis. Whether at the U.S. Patent and Trademark Office or in district court, it is impossible for the decision-maker to ignore all knowledge of the invention, go back to "the time the invention was made" and then address

whether the invention would have been obvious at that time without considering the invention itself.

Similarly, a decision-maker cannot simply erase the psychological fact that things seem more obvious, in hindsight. The Federal Circuit has recognized that this phenomenon is especially true in the case of simple technology. *McGinley v. Franklin Sports, Inc.*, 262 F.3d 1339, 1351 (Fed. Cir. 2001) ("When the art in question is relatively simple, as is the case here, the opportunity to judge by hindsight is particularly tempting.").

C. Section 103 Prohibits Hindsight, But The *Graham* Test Does Not Specifically Address It

As shown in the table below, *Graham's* three "basic factual inquiries" draw from the statutory language. *Graham's* three-part test is silent, however, on the "at the time the invention was made" requirement of Section 103. Indeed as shown below, it is the only concept in Section 103 *not* expressly addressed in the *Graham* test. 383 U.S. at 17.

Section 103(a)	*Graham* Test
"(a) A patent may not be obtained though the invention is not identically disclosed or described as set forth in section 102 of this title, if [2] the differences between the subject matter sought to be patented and [1] the prior art are such that the subject matter as a whole would have been obvious [4] *at the time the invention was made* to [3] a person having ordinary skill in the art to which said subject matter pertains."	"[T]he § 103 condition, which is but one of three conditions, each of which must be satisfied, lends itself to several basic factual inquiries. Under § 103, [1] the scope and content of the prior art are to be determined; [2] differences between the prior art and the claims at issue are to be ascertained; and [3] the level of ordinary skill in the pertinent art resolved. Against this background, the obviousness or non-obviousness of the subject matter is determined." 383 U.S. at 17.

The purpose of the "at the time the invention was made" statutory requirement is to prevent use of hindsight knowledge of the invention to re-create the invention from the prior art. *In re Kahn*, 441 F.3d 977, 986 (Fed. Cir. 2006) (*citing and quoting* Giles S. Rich, *Laying The Ghost of the Invention Requirement*, 1 APLA Q.J. 26-45 (1972), *reprinted in* 14 Fed. Cir. B.J. 163, 170 (2004) ("To protect the invention from hindsight reasoning, the time is specified to be *the time when the invention was made*")(emphasis in original)); *In re Dembiczak*, 175 F.3d 994, 998-99 (Fed. Cir. 1999) *abrogated on other grounds, In re Gartside*, 203 F.3d 1305, 1316 (Fed. Cir. 2000); *In re Deminski*, 796 F.2d 436, 443 (Fed. Cir. 1986).

Although *Graham* mentions that secondary considerations may help "guard against" the improper use of hindsight, 383 U.S. at 36, the 3-factor *Graham test* does not itself systematically prevent use of hindsight. If unchecked, the use of hindsight can undercut the "uniformity and definiteness," 383 U.S. at 18, sought in *Graham*.

III. THE FEDERAL CIRCUIT'S TEACHING-SUGGESTION-MOTIVATION TEST PROVIDES A SYSTEMATIC RESTRAINT ON THE IMPROPER USE OF HINDSIGHT THAT IS CONSISTENT WITH THE STATUTE, PRECEDENT, AND GOOD POLICY

A. The Federal Circuit Uses The Teaching-Suggestion-Motivation Test As A Systematic Restraint On The Improper Use Of Hindsight In An Obviousness Analysis

The Federal Circuit has heeded the statutory prohibition of, and this Court's caution against, the improper use of hindsight. The Federal Circuit has addressed the hindsight problem by requiring evidence of a teaching, suggestion or motivation to combine prior art references and/or create the patented invention. As stated by the Federal Circuit:

> Our case law makes clear that the best defense against hindsight-based obviousness analysis is the rigorous application of the requirement for a showing of a teaching or motivation to combine the prior art references. *See Dembiczak*, 175 F.3d at 999, 50 USPQ2d at 1617. "Combining prior art references without evidence of such a suggestion, teaching, or motivation simply takes

> the inventor's disclosure as a blueprint for piecing together the prior art to defeat patentability – the essence of hindsight." *Id.*

Ecolochem, Inc. v. Southern Calif. Edison Co., 227 F.3d 1361, 1371-72 (Fed. Cir. 2000); *see also, e.g., McGinley*, 262 F.3d at 1351.

The Federal Circuit has repeatedly emphasized that the teaching, suggestion or motivation need not be express. *See, e.g., Dystar Textilfarben GmbH & Co. Deutschland KG v. C.H. Patrick Co.*, 2006 WL 2806466, *11-12 (Fed. Cir. 2006); *Kahn*, 441 F.3d at 987-88; *Motorola, Inc. v. Interdigital Technology Corp.*, 121 F.3d 1461, 1472 (Fed. Cir. 1997); *In re Nilssen*, 851 F.2d 1401, 1403 (Fed. Cir. 1988). Indeed the very first Federal Circuit case addressing the topic made that point: "whether a combination of the teachings of all or any of the references would have suggested *(expressly or by implication)* the possibility of achieving further improvement by combining such teachings along the line of the invention in suit." *In re Sernaker*, 702 F.2d 989, 994 (Fed. Cir. 1983) (emphasis added). The teaching, suggestion or motivation can arise from the level of skill in the art, *Motorola*, 121 F.3d at 1472; *In re Jones*, 958 F.2d 347, 351 (Fed. Cir. 1992), or even the nature of the problem addressed *Kahn*, 441 F.3d at 988; *Cross Med. Prods. Inc. v. Medtronic Sofamor Danek, Inc.*, 424 F.3d 1293, 1323 (Fed. Cir. 2005).

B. The Teaching-Suggestion-Motivation Test Is Consistent With The Statute

The teaching-suggestion-motivation test is consistent with the statute. First, and foremost, it implements the "at the time the invention was made" requirement.

Second, the teaching-suggestion-motivation test is consistent with the "obvious . . . to a person having ordinary skill in the art" standard. When an invention is *obvious* to a person of *ordinary* skill, there will almost certainly be evidence of a teaching, suggestion or motivation to create the invention – remembering that the evidence may be implied and/or take a variety of forms.

In short, by requiring evidence of a teaching, suggestion or motivation, the Federal Circuit is merely requiring some *objective evidence*, rather than the mere *subjective conclusion* advocated by the Petitioner, that the statutory standard is met.

The Federal Circuit has many times found a teaching suggestion or motivation that supports obviousness under the *Graham* test. *See, e.g.*, *Dystar*, 2006 WL 2806466, *13-14; *Alza Corp. v. Mylan Labs, Inc.*, 2006 WL 2556356, *8 (Fed. Cir. 2006); *Ormoco Corp. v. Align Technology, Inc.*, 2006 WL 2493245, *7 (Fed. Cir. 2006); *Kahn*, 441 F.3d at 989-90 (Fed. Cir. 2006); *SIBIA Neurosciences, Inc. v. Cadus Pharm. Corp.*, 225 F.3d 1349, 1359 (Fed. Cir. 2000); *Richardson-Vicks, Inc. v. Upjohn Co.*, 122 F.3d 1476, 1484 (Fed. Cir. 1997); *Motorola*, 121 F.3d at 1472; *Para-Ordnance Mfg., Inc. v. SGS Importers, Int'l, Inc.*, 73 F.3d 1085, 1090 (Fed. Cir. 1995); *Ryco, Inc. v. Ag-Bag Corp.*, 857 F.2d 1418, 1425 (Fed. Cir. 1988). The Federal Circuit has also used the test to preserve patentability of inventions that seem obvious only in hindsight. *Yamanouchi Pharm. Co. v. Danbury Pharmacal, Inc.*, 231 F.3d 1339, 1345 (Fed. Cir. 2000); *Ecolochem*, 227 F.3d at 1372; *ATD Corp. v. Lydall Inc.*, 159 F.3d 534, 546 (Fed. Cir. 1998); *Gillette*, 919 F.2d at 725-26.

C. The Teaching-Suggestion-Motivation Test Is Consistent With This Court's Precedent

The teaching-suggestion-motivation test is consistent with the precedent of this Court. The test is consistent with *Graham*, because the *Graham* 3-part test does not address the "at the time the invention was made" aspect of the statute and the teaching-suggestion-motivation test fills that role. Further, the teaching-suggestion-motivation test reinforces the "uniformity and definiteness" sought in *Graham*. 383 U.S. at 18.

The test has a long history, pre-dating *Graham*. Before the creation of the Federal Circuit, the requirement of a teaching, suggestion or motivation (then generally referred to as a "suggestion") was well established in its predecessor court, the Court of Customs and Patent Appeals ("CCPA"). *Sernaker*, 702 F.2d at 994 (citing many CCPA cases); *see also In re Sponnoble*, 405 F.2d 578, 585 (CCPA 1969); *In re Leonor*, 395 F.2d 801, 802 (CCPA 1968); *In re Bergel*, 292 F.2d 955, 956-57 (CCPA 1961); *In re Shaffer*, 229 F.2d 476, 479 (CCPA 1956); *In re Fridolph*, 134 F.2d 414, 416 (CCPA 1943). Despite the existence of this CCPA precedent, the *Graham* Court did not disturb the then-extant "suggestion" law. On the contrary, the Court stated that the *Graham* analysis was consistent with prior patentability precedent. 383 U.S. at 17.

The Petitioner argues that the teaching-suggestion-motivation test is inconsistent with this Court's *Sakraida v. Ag Pro, Inc.*, 425 U.S. 273 (1976) and *Anderson's-Black Rock v. Pavement Salvage Co.*, 396 U.S. 57 (1969) decisions. The teaching-suggestion-motivation test is not inconsistent with these cases because they did not address the hindsight

prohibition to which the teaching-suggestion-motivation test is directed. *Sakraida* and *Anderson's-Black Rock* certainly did not and could not overturn the statutory requirement that the obviousness analysis be conducted "at the time the invention was made."

Additionally, *Sakraida* and *Anderson's-Black Rock* both applied the *Graham* test, *Sakraida*, 425 U.S. at 280, *Anderson's-Black Rock*, 396 U.S. at 62, which shows the Court did not create a separate test for so-called "combination" patents. *Graham* itself involved a "combination" invention, 383 U.S. at 4 ("The invention, a combination of old mechanical elements . . ."), and certainly does not indicate that it was creating a special test for "combination" inventions. Indeed, the Federal Circuit was correct in reasoning that it is unproductive to label inventions "combination" inventions, because nearly all inventions are combinations of old things. *Stratoflex, Inc. v. Aeroquip Corp.*, 713 F.2d 1530, 1540 (Fed. Cir. 1983). As the Federal Circuit appropriately stated: "Only God works from nothing. Men must work from old elements." *Fromson v. Advance Offset Plate, Inc.* 755 F.2d 1549, 1556 (Fed. Cir. 1985) (*quoting* Markey, *Why Not The Statute*, 65 JPOS 331 (1983)); *see also*, National Academies Report, p. 89 ("Every invention at some level is a combination of old elements.").

D. The Teaching-Suggestion-Motivation Test Is Consistent With Good Policy Because It Restrains Improper Hindsight

The teaching-suggestion-motivation test is also consistent with good public policy. As mentioned above, this Court recognized the hindsight problem long ago. *Diamond*, 220 U.S. at 434-35. More recently, both the Federal Trade

Commission and the National Academies concluded that the patent system must restrain use of hindsight in obviousness decisions, and that the teaching-suggestion-motivation test fills that role. (FTC Report, Ch. 4, p. 12; National Academies Report, p. 89.) While the FTC Report challenged the consistency of some applications of the teaching-suggestion-motivation test, the FTC did not call for abolishing the test, and was positive regarding the Federal Circuit's then "most recent articulations" of this test. (FTC Report, Executive Summary, p. 12.) Similarly, the National Academies called into question only analyses of certain types of patents. (National Academies Report, pp. 87-95, addressing "business method inventions" and "gene sequence-related inventions.")

E. Abolishing The Teaching-Suggestion-Motivation Test Will Not Solve The Problems Raised By The Petitioner And *Amici*, And Will Create Larger Problems By Unleashing Hindsight

Finally, many of the problems raised by some *amici* have no relation to the teaching-suggestion-motivation test. Overload at the PTO could be cured with amendments to PTO rules. Purported problems stemming from so-called "business method" patents could be addressed by addressing "business method" patents. Both are issues that Congress has and will likely continue to address.

Disrupting the entire patent system, by overturning well-established decisional law, and potentially injecting hindsight into every obviousness analysis is, at best, overkill. In fact, it is far worse. It potentially subjects every invention to an improper hindsight analysis. The FCBA submits that the risk of non-obvious inventions being invalidated because of hindsight, without the teaching-suggestion-motivation test,

is far greater than the risk of obvious inventions being patented because of the test. Intensive public scrutiny of the latter concern reflects that it is not substantial. The former, however, could threaten the predictability of the patent system.

Finally, briefs suggesting the teaching-suggestion-motivation test should be abolished because the standard for patentability is too low are addressed to the wrong forum. Congress has established the standard for patentability. The question is whether the teaching-suggestion-motivation test, in conjunction with the *Graham* 3-factor test, implements the statutory standard for patentability. The FCBA submits that it does.

CONCLUSION

Section 103 expressly precludes the use of hindsight in assessing obviousness, yet it is the only element of Section 103 that is not expressly addressed in the three-factor *Graham* test. The Federal Circuit has adopted the teaching-suggestion-motivation test to implement the statutory prohibition against hindsight, and that test is consistent with the statute, precedent and good policy. If unchecked, the use of hindsight in obviousness analyses will create a highly subjective test and result in many non-obvious inventions improperly being found unpatentable. The FCBA respectfully requests that this Court retain the teaching-suggestion-motivation test to effect the statutory prohibition against the use of hindsight in assessing obviousness.

Respectfully submitted,

FRANK A. ANGILERI
BROOKS KUSHMAN P.C.
1000 Town Center
Twenty-Second Floor
Southfield, Michigan 48075
(248) 358-4400

Attorneys for Amicus Curiae

554F

Supreme Court, U.S.
FILED
AUG 2 2 2006
OFFICE OF THE CLERK

No. 04-1350

IN THE
Supreme Court of the United States

KSR INTERNATIONAL COMPANY,

Petitioner,

v.

TELEFLEX, INC., *et al.*,

Respondents.

On Writ of Certiorari to the United States Court of Appeals for the Federal Circuit

BRIEF AMICI CURIAE OF FORD MOTOR COMPANY AND DAIMLERCHRYSLER CORPORATION IN SUPPORT OF NEITHER PARTY

WILLIAM J. COUGHLIN
FRANKLIN A. MACKENZIE
DAMIAN PORCARI
JENNIFER M. STEC
DANIEL M. STOCK
FORD GLOBAL TECHNOLOGIES, LLC
330 Town Center Drive
Dearborn, Michigan 48126
(313) 323-1289

CATHERINE E. STETSON*
HOGAN & HARTSON L.L.P.
555 Thirteenth Street, N.W.
Washington, D.C. 20004
(202) 637-5491

* Counsel of Record

Counsel for Amici Curiae

(additional counsel on inside cover)

WILSON-EPES PRINTING CO., INC. – (202) 789-0096 – WASHINGTON, D.C. 20001

Additional counsel:

RALPH EDWIN SMITH
DAIMLERCHRYSLER
CORPORATION
800 Chrylser Drive
Auburn Hills, Michigan 48326
(248) 944-6519

TABLE OF CONTENTS

	Page
TABLE OF AUTHORITIES	iii
STATEMENT OF INTEREST OF AMICI CURIAE	1
SUMMARY OF ARGUMENT	3
ARGUMENT	5
I. THE FEDERAL CIRCUIT'S "TEACHING, SUGGESTION, OR MOTIVATION" TEST CAN BE APPLIED CONSISTENT WITH THE PATENT ACT AND THIS COURT'S PRECEDENT	5
A. The Statutory Test For Obviousness Distinguishes Trivial Inventions That Do Not Warrant Patent Protection	5
B. The "Teaching, Suggestion, Or Motivation" Test Can Be Applied Consistent With Section 103 And *Graham*	8
C. Courts Applying The "Teaching, Suggestion, Or Motivation" Test Should Carefully Consider The Perspective Of A Person Having Ordinary Skill In The Art	12
D. Eliminating The "Teaching, Suggestion, Or Motivation" Test Will Not Solve The Problems Attributed To It	15

TABLE OF CONTENTS—Continued

Page

II. IMPOSING A HEIGHTENED STANDARD FOR DETERMINING OBVIOUSNESS OF CERTAIN CATEGORIES OF PATENTS IS INCONSISTENT WITH SECTION 103 AND THIS COURT'S PRECEDENT AND WOULD HARM INNOVATION 16

A. Section 103 And This Court's Precedent Do Not Support A Heightened Standard Of Patentability For Combination Patents 17

B. A Heightened Standard For Determining Whether A Combination Patent Is Nonobvious Creates A Substantial Risk Of Impeding Innovation 19

CONCLUSION 23

TABLE OF AUTHORITIES

Page

CASES:

ACS Hosp. Sys., Inc. v. *Montefiore Hosp.*, 732 F.2d 1572 (Fed. Cir. 1984)..... 8

American Hoist & Derrick Co. v. *Sowa & Sons, Inc.*, 725 F.2d 1350 (Fed. Cir.), *cert. denied*, 469 U.S. 821 (1984)..... 15-16

Anderson's-Black Rock v. *Pavement Co.* 396 U.S. 57 (1969)..... 18

B.G. Corp. v. *Walter Kidde & Co.*, 79 F.2d 20 (2d Cir. 1935)..... 11

Bonito Boats, Inc. v. *Thunder Craft, Inc.*, 489 U.S. 141 (1989)..... 5

Brown & Williamson Tobacco Co. v. *Philip Morris Inc.*, 229 F.3d 1120 (Fed. Cir. 2000)..... 8, 10, 12

Connell v. *Sears, Roebuck & Co.*, 722 F.2d 1542 (Fed. Cir. 1983)..... 15, 17

Custom Accessories, Inc. v. *Jeffrey-Allan Indus., Inc.*, 807 F.2d 955 (Fed. Cir. 1986)..... 19

Ecolochem, Inc. v. *Southern Cal. Edison Co.*, 227 F.3d 1361 (Fed. Cir. 2000), *cert. denied*, 532 U.S. 974 (2001)..... 10

Environmental Designs, Ltd. v. *Union Oil Co.*, 713 F.2d 693 (Fed. Cir. 1983), *cert. denied*, 464 U.S. 1043 (1984)..... 11

Expanded Metal Co. v. *Bradford*, 214 U.S. 366 (1909)..... 9-10, 11

Florida Prepaid Postsecondary Educ. Expense Bd. v. *College Sav. Bank*, 527 U.S. 627 (1999)..... 17-18

Graham v. *John Deere Co.*, 383 U.S. 1 (1966) ..... *passim*

TABLE OF AUTHORITIES—Continued

Page

Hotchkiss v. *Greenwood*, 52 U.S. (11 How.) 248 (1851) 6

In re Kahn, 441 F.3d 977 (Fed. Cir. 2006) 10, 12

In re Kotzab, 217 F.3d 1365 (Fed. Cir. 2000) 8, 11, 13, 14

In re Rouffet, 149 F.3d 1350 (Fed. Cir. 1998) ..... *passim*

McGinley v. *Franklin Sports, Inc.*, 262 F.3d 1339 (Fed. Cir. 2001) 9, 11, 22

Monarch Knitting Mach. Corp. v. *Sulzer Morat Cmbh*, 139 F.3d 877 (Fed. Cir. 1998) 9

Pro-Mold & Tool Co. v. *Great Lakes Plastics, Inc.*, 75 F.3d 1568 (Fed. Cir. 1996) 10

Reiner v. *I. Leon Co.*, 285 F.2d 501 (2d Cir. 1960), *cert. denied*, 366 U.S. 929 (1961) 11

Rengo Co. v. *Molins Mach. Co.*, 657 F.2d 535 (3d Cir.), *cert. denied*, 454 U.S. 1055 (1981) 19

Ruiz v. *A.B. Chance Co.*, 234 F.3d 654 (Fed. Cir. 2000) 15

Sakraida v. *AG Pro, Inc.*, 425 U.S. 273 (1976) 18

Sears, Roebuck & Co. v. *Stiffel Co.*, 376 U.S. 225 (1964) 17

Standard Oil Co. v. American Cyanamid Co., 774 F.2d 448 (Fed. Cir. 1985) 14

Stratoflex, Inc. v. *Aeroquip Corp.*, 713 F.2d 1530 (Fed. Cir. 1983) 19

W.L. Gore & Assocs., Inc. v. *Garlock, Inc.*, 721 F.2d 1540 (Fed. Cir. 1983), *cert. denied*, 469 U.S. 851 (1984) 9

TABLE OF AUTHORITIES—Continued

Page

Winner Int'l Royalty Corp. v. *Wang*, 202 F.3d 1340 (Fed. Cir.), *cert. denied*, 530 U.S. 1238 (2000) 9

WMS Gaming, Inc. v. *International Game Tech.*, 184 F.3d 1339 (Fed. Cir. 1999) 8

STATUTES:

35 U.S.C. § 103 6

35 U.S.C. § 103(a) 2, 7, 17

RULE:

Sup. Ct. R. 37.6 1

LEGISLATIVE MATERIALS:

S. Rep. No. 1979 (1952) 17

H.R. Rep. No. 1923 (1952) 17

OTHER AUTHORITIES:

John H. Barton, *Non-Obviousness*, 43 IDEA: The Journal of Law & Tech. 475 (2003) 16-17

Rebecca S. Eisenberg, *Obvious to Whom? Evaluating Inventions from the Perspective of PHOSITA*, 19 Berkeley Tech. L.J. 885 (2004) 7, 9, 12

Federal Trade Commission, *To Promote Innovation: The Proper Balance of Competition and Patent Law and Policy* (2003) 11-12, 13, 16

The Henry Ford, History of the Rouge, *http://thehenryford.org/rouge/history2.asp* 21

General Motors, History, *http://gm.com/company/corp_info/history/gmhis1910.html* 20

TABLE OF AUTHORITIES—Continued

Page

IHS, Automotive Glazing: Origins of the Art, *http://auto.ihs.com/newsletters/auto-july05-2.jsp* 21

Mark A. Lemley & David W. O'Brien, *Encouraging Software Reuse*, 49 Stan. L. Rev. 255 (1997) 17

Sean M. McEldowney, *New Insights in the "Death" of Obviousness: An Empirical Study of District Court Obviousness Opinions*, 2006 Stan. Tech. L. Rev. 4 (2006) 9

National Research Council, *A Patent System for the 21st Century* (2004) 16

Carl Shapiro, *Patent System Reform: Economic Analysis and Critique*, 19 Berkeley Tech. L.J. 1017 (2004) 16

IN THE

Supreme Court of the United States

No. 04-1350

KSR INTERNATIONAL COMPANY,

Petitioner,

v.

TELEFLEX, INC., *et al.*,

Respondents.

On Writ of Certiorari to the United States Court of Appeals for the Federal Circuit

BRIEF AMICI CURIAE OF FORD MOTOR COMPANY AND DAIMLERCHRYSLER CORPORATION IN SUPPORT OF NEITHER PARTY

STATEMENT OF INTEREST OF AMICI CURIAE

Ford Motor Company ("Ford") and DaimlerChrysler Corporation are both auto companies with significant worldwide operations.[1] Founded in 1903, Ford grew from a small

[1] Pursuant to this Court's Rule 37.6, we note that no part of this brief was authored by counsel for any party, and no person or entity other than *amici curiae* made a monetary contribution to the preparation or submission of the brief. The brief is filed with the

enterprise into one of the world's largest corporations due in great part to innovations like the Model T and the moving assembly line. The Model T, first introduced in 1908, was small, lightweight, easy to assemble, and priced low enough to be affordable for working people. First implemented in 1913, the moving assembly line permitted Ford to vastly improve the efficiency of the manufacturing process and to make vehicles significantly less expensive.

DaimlerChrysler Corporation is the successor corporation to the Chrysler Corporation, which was founded in 1925. Like Ford, DaimlerChrysler Corporation has contributed many significant innovations to the industry, such as electric windshield wipers and full-time power steering.

Amici's innovations have resulted in the issuance of several thousand patents, many of which in turn have laid the foundation for future developments. Amici's past successes resulted from, and their future success depends on, their ability to patent their innovations and thereby to recoup the significant costs of developing new products. Because of the nature of innovation in the automobile industry, amici also have a keen interest in ensuring continued access to patent protection for nonobvious "combination" patents. Amici conversely have an interest in ensuring that patents on obvious inventions are not issued—or if they are issued in error, that they can be efficiently identified as obvious and invalidated on judicial review. The perspective provided by amici's long experience in automotive innovation is vital to a balanced evaluation of the question at issue in this case.

---

consent of the parties, both of which have consented to the filing of any briefs of *amicus curiae* in this case.

SUMMARY OF ARGUMENT

I. A novel and useful invention is only patentable if it constitutes a sufficient advancement on the prior art that it is not considered "obvious." 35 U.S.C. § 103(a). In order to assess whether an invention that incorporates elements that can be found in prior art references is obvious and therefore unpatentable, the Federal Circuit asks whether there existed a "teaching, suggestion, or motivation" to combine the prior art to achieve the result for which patent protection is sought. The Federal Circuit's "teaching, suggestion, or motivation" test is consistent with the statutory criteria for obviousness set forth in Section 103 and with this Court's decision in *Graham* v. *John Deere Co.*, 383 U.S. 1 (1966), because it employs the same factors Section 103 and *Graham* endorse: (1) a comparison between the prior art and the invention; (2) an assessment of the state of the art at the time the invention was developed; and (3) consideration of the perspective of a person having ordinary skill in the art. The "teaching, suggestion, or motivation" test is a common-sense framework within which to assess and resolve the question at the core of the obviousness inquiry whenever a combination patent is challenged: would it have been obvious to a skilled practitioner to combine the prior art references? Virtually every patented invention, after all, can be challenged as obvious on the basis of prior art references. By asking if there existed a "teaching, suggestion, or motivation" to combine the references, the Federal Circuit's test ensures that the obviousness inquiry does not reduce to simply using the inventor's disclosure as a blueprint to cobble together past references and then—with the benefit of hindsight—declaring the patent obvious.

The "teaching, suggestion, or motivation" test is most effective when it adequately takes into account the perspective of a person having ordinary skill in the art, or "PHOSITA." Courts too often diminish the role of the

PHOSITA, limiting the analysis of "skill in the relevant art" merely to an inquiry into a hypothetical practitioner's level of education and years of experience in the field. The skilled practitioner's perspective—and in particular, the likelihood that a skilled practitioner would naturally piece together elements found in prior art references to achieve a new result—is a critical element of the obviousness inquiry. This Court dictated as much a hundred and fifty years ago.

An analysis of the skilled practitioner's perspective as part of the "teaching, suggestion, or motivation" test should also consider the types of problems encountered in the art, the prior art solutions to those problems, the rapidity with which innovations are made in the art, and the sophistication of the technology at issue. Paying closer attention to such factors will allow patent examiners and judges to assess with greater precision whether a given invention is obvious within the meaning of Section 103.

II. Imposing a heightened standard of nonobviousness for combination patents, as Petitioner and various commentators have suggested, would be a serious mistake. Section 103 does not distinguish categories of patents based on whether or not they are claimed as a combination of elements. There is no support in the statute for subjecting combination patents to heightened scrutiny for compliance with the obviousness requirement.

Even if the Patent Act's plain language did not preclude applying a heightened standard for assessing inventions that incorporate elements of the prior art, the automobile industry's experience shows how this approach would frustrate innovation and ultimately harm consumers. Progress in the automotive industry has often resulted from incremental improvements on preexisting ideas. Multiple resource-intensive steps are often required to transform an invention into a commercially viable feature that is not cost-prohibitive

for a mass market. Imposing a heightened obviousness standard merely because the final invention incorporates elements of the prior art will only impede future innovations.

ARGUMENT

I. THE FEDERAL CIRCUIT'S "TEACHING, SUGGESTION, OR MOTIVATION" TEST CAN BE APPLIED CONSISTENT WITH THE PATENT ACT AND THIS COURT'S PRECEDENT.

The Federal Circuit's "teaching, suggestion, or motivation" standard is an essential tool for determining whether a patent is obvious within the meaning of Section 103 of the Patent Act. The standard employs the same factors set forth in the Patent Act and identified by this Court for assessing obviousness. Applying the "teaching, suggestion, or motivation" test properly, however, requires that particular attention be paid to the perspective of a person having ordinary skill in the art, or "PHOSITA." The PHOSITA's perspective provides the lens through which obviousness determinations must be viewed.

A. The Statutory Test For Obviousness Distinguishes Trivial Inventions That Do Not Warrant Patent Protection.

The statutory requirement limiting patents to nonobvious inventions dates only to 1952, but it reflects long-standing concerns about the proper scope of patent protection. Patents seek to encourage innovation by offering limited exclusive rights to an invention in exchange for the immediate public disclosure of information about the invention. *See Bonito Boats, Inc.* v. *Thunder Craft, Inc.*, 489 U.S. 141, 150-151 (1989) ("The federal patent system thus embodies a carefully crafted bargain for encouraging the creation and disclosure of new, useful, and nonobvious advances in technology and design in return for the exclusive right to practice the inven-

tion for a period of years."). By encouraging public disclosure, the public attains the immediate benefit of increased knowledge, which can be put toward development of new ideas and products, while inventors are granted a limited period of exclusivity within which to capitalize on an invention and recoup the costs of research and development.

But formulating the conditions of patentability has not proved easy. *Graham*, 383 U.S. at 10. Too low a threshold for patentability—*i.e.*, rewarding inventions that should be deemed routine—increases costs to the public and may hamper innovation. Too high a threshold in turn risks discouraging innovation by denying inventors the opportunity to profit from their inventions.

The first patent statutes passed over this problem and only set two conditions for patentability: utility and novelty. It was not until *Hotchkiss* v. *Greenwood*, 52 U.S. (11 How.) 248 (1851), that this Court identified that an applicant for a patent must claim an "invention"—rather than mere rote application of old techniques to new materials—to be worthy of a patent monopoly. Reviewing a patent that essentially claimed as its "invention" the use of porcelain or clay instead of wood or metal in doorknobs, the Court held the patent invalid. The Court explained that the difference between the old art—wood doorknobs—and the art claimed in the patent—porcelain doorknobs—was "destitute of ingenuity or invention. It may afford evidence of judgment and skill in the selection and adaptation of the materials in the manufacture of the instrument for the purposes intended, but nothing more." *Id.* at 266. A standard demonstration of skill in the art was insufficient in itself to merit a patent: "[U]nless more ingenuity and skill * * * were required * * * than were possessed by an ordinary mechanic acquainted with the business, there was an absence of that degree of skill and ingenuity which constitute essential elements of every

invention. In other words, the improvement is the work of the skillful mechanic, not that of the inventor." *Id* at 267.

Congress eventually codified the *Hotchkiss* "invention" requirement in the Patent Act of 1952 when it created a third statutory condition of patentability: nonobviousness. Section 103 of the Act declares that "[a] patent may not be obtained * * * if the differences between the subject matter sought to be patented and the prior art are such that the subject matter as a whole would have been obvious at the time the invention was made to a person having ordinary skill in the art to which the subject matter pertains." 35 U.S.C. § 103(a). The statute "specifies a point in time as of which the obviousnesss of the invention should be evaluated ('at the time the invention was made') and designates the person whose judgment of obviousness should control ('to a person having ordinary skill in the art to which said subject matter pertains' or PHOSITA), as well as directing attention to 'the differences between the subject matter sought to be patented and the prior art.' " Rebecca S. Eisenberg, *Obvious to Whom? Evaluating Inventions from the Perspective of PHOSITA*, 19 Berkeley Tech. L.J. 885, 886 (2004) (quoting Section 103).

Section 103 "was intended merely as a codification of judicial precedents embracing the *Hotchkiss* condition, with congressional directions that inquiries into the obviousness of the subject matter sought to be patented are a prerequisite to patentability." *Graham*, 383 U.S. at 17. The *Graham* Court reasoned that while "the ultimate question of patent validity is one of law," Section 103 "lends itself to several basic factual inquiries," including "the scope and content of the prior art," "differences between the prior art and the claims at issue," and "the level of ordinary skill in the pertinent art." *Id.* "[S]econdary considerations" like "commercial success, long felt but unsolved needs, [and] failure of others" to perfect the invention—also findings of fact—are potentially relevant to determining obviousness as well. *Id.* at 17.

B. The "Teaching, Suggestion, Or Motivation" Test Can Be Applied Consistent With Section 103 And *Graham*.

The Federal Circuit has repeatedly held—and it held in this case—that when an obviousness challenge is based on the teachings of multiple prior art references, the challenger must establish some "suggestion, teaching, or motivation" that would have led a person of ordinary skill in the art to combine the relevant prior art teachings in the manner claimed. *See ACS Hosp. Sys., Inc.* v. *Montefiore Hosp.*, 732 F.2d 1572, 1577 (Fed. Cir. 1984); *In re Rouffet*, 149 F.3d 1350, 1355 (Fed. Cir. 1998) ("When a rejection [of a patent application] depends on a combination of prior art references, there must be some teaching, suggestion, or motivation to combine the references."). The "teaching, motivation or suggestion may be implicit from the prior art as a whole, rather than expressly stated in the references." *In re Kotzab*, 217 F.3d 1365. 1370 (Fed. Cir. 2000) (citing *WMS Gaming, Inc.* v. *International Game Tech.*, 184 F.3d 1339, 1355 (Fed. Cir. 1999)). The evidence of a teaching, suggestion, or motivation to combine "may flow from the prior art references themselves, the knowledge of one of ordinary skill in the art, or, in some cases, from the nature of the problem to be solved." *Brown & Williamson Tobacco Co.* v. *Philip Morris Inc.*, 229 F.3d 1120, 1125 (Fed. Cir. 2000).

Three concepts are wrapped into the Federal Circuit's "teaching, suggestion, or motivation" test: [1] a comparison of the prior art and the invention, [2] a review as of the time the invention was created, and [3] the perspective of a person of ordinary skill in the art. By integrating these three considerations, the test homes in on the same factors identified in Section 103 and *Graham* as being relevant to obviousness.

First, the "teaching, suggestion, or motivation" test requires comparing prior art elements to the invention and asking if the step from the former to the latter would have

been obvious to a person of ordinary skill in the art. This element of the test can be "viewed conceptually as a subset of the first *Graham* factor, the scope and content of the prior art." *McGinley* v. *Franklin Sports, Inc.*, 262 F.3d 1339, 1351 (Fed. Cir. 2001) (citing *Winner Int'l Royalty Corp.* v. *Wang*, 202 F.3d 1340, 1348 (Fed. Cir. 2000); *Monarch Knitting Mach. Corp.* v. *Sulzer Morat Cmbh*, 139 F.3d 877, 881-883 (Fed. Cir. 1998)); *see also* Eisenberg, *Obvious to Whom?*, 19 Berkeley Tech. L.J. at 897 ("[T]he language of § 103 explicitly points to the prior art as a benchmark for evaluating the obviousness of the invention.").

Second, with its focus on the state of the prior art at the time the invention was created, the "teaching, suggestion, or motivation" test also ensures that the determination of obviousness is made with the appropriate time frame—the time the invention was made—foremost in mind. The danger of hindsight overtaking the obviousness inquiry is particularly acute "[w]hen the art in question is relatively simple." *McGinley*, 262 F.3d at 1351; *see also* Sean M. McEldowney, *New Insights in the "Death" of Obviousness: An Empirical Study of District Court Obviousness Opinions*, 2006 Stan. Tech. L. Rev. 4 (2006) (empirical study of district court decisions on obviousness concluding that courts were less likely to invalidate complex patents than simple patents), *available at* http://stlr.stanford.edu/STLR/Articles/06_STLR_4/McEldowney-Obviousness.pdf. In such cases it is easy "to fall victim to the insidious effect of a hindsight syndrome wherein that which only the inventor taught is used against its teacher." *W.L. Gore & Assocs., Inc.* v. *Garlock, Inc.*, 721 F.2d 1540, 1553 (Fed. Cir. 1983).[2] The require-

---

[2] This Court, too, has recognized the danger of hindsight bias when evaluating seemingly simple inventions:

> It is often difficult to determine whether a given improvement is a mere mechanical advance, or the result of the exercise of the creative faculty amounting to a meritorious invention.

ment of a suggestion, teaching, or motivation to combine prior art guards against the dangers of hindsight-based obviousness determinations by prohibiting examiners and judges from using a patent as a "blueprint" with which to invalidate patents. *Ecolochem, Inc.* v. *Southern Cal. Edison Co.*, 227 F.3d 1361, 1372 (Fed. Cir. 2000) (encouraging "rigorous application of the requirement for a showing of a teaching or motivation to combine the prior art references" to mitigate hindsight bias).

Third, although "the suggestion [to combine prior art references] more often comes from the teachings of the pertinent references," *Rouffet*, 149 F.3d at 1355, a "suggestion" to combine prior art references can come from the nature of the problem to be solved *or* from the level of ordinary skill in the art. *See, e.g.*, *Brown & Williamson*, 229 F.3d at 1125; *Winner Int'l Royalty*, 202 F.3d at 1348; *Rouffet*, 149 F.3d at 1357; *Pro-Mold & Tool Co.* v. *Great Lakes Plastics, Inc.*, 75 F.3d 1568, 1573 (Fed. Cir. 1996). As a result, "the 'motivation-suggestion-teaching' test asks not merely what the references disclose, but whether a person of ordinary skill in the art, possessed with the understandings and knowledge reflected in the prior art, and motivated by the general problem facing the inventor, would have been led to make the combination recited in the claims." *In re Kahn*, 441 F.3d 977, 988 (Fed. Cir. 2006). As the court of appeals has explained,

> [T]he level of skill in the art may inform whether the artisan would find a suggestion to combine in the teachings of an exemplar of prior art. Where the level of skill is high, one may assume a keener appreciation of nuances

---

> The fact that the invention seems simple after it is made does not determine the question; if this were the rule, many of the most beneficial patents would be stricken down.

Expanded Metal Co. v. *Bradford*, 214 U.S. 366, 381 (1909).

> taught by the prior art. Similarly, appreciation of the differences between the claims in suit and the scope of the prior art references—a matter itself informed by the operative level of skill in the art—informs the question of whether to combine prior art references.

McGinley, 262 F.3d at 1351.

Inquiring if there is a "teaching, suggestion, or motivation" to combine prior art references makes particular sense as a test for evaluating obviousness. *See Expanded Metal Co.*, 214 U.S. at 381 (noting that "[t]here is nothing in the prior art that *suggests* the combined operation of the * * * patent in suit") (emphasis added). "[V]irtually all [inventions] are combinations of old elements." *Environmental Designs, Ltd.* v. *Union Oil Co.*, 713 F.2d 693, 698 (Fed. Cir. 1983). It therefore is not uncommon for "every element of a claimed invention [to] * * * be found in the prior art," *Kotzab*, 217 F.3d at 1370. *See also Reiner* v. *I. Leon Co.*, 285 F.2d 501, 503 (2d Cir. 1960) ("It is idle to say that combinations of old elements cannot be inventions; substantially every invention is for such a 'combination': that is to say, it consists of former elements in a new assemblage.") (Hand., J.); *B.G. Corp.* v. *Walter Kidde & Co.*, 79 F.2d 20, 22 (2d Cir. 1935) ("All machines are made up of the same elements; rods, pawls, pitmans, journals, toggles, gears, cams, and the like, all acting their parts as they always do and always must.") (Hand, J.). "If identification of each claimed element in the prior art were sufficient to negate patentability," the Federal Circuit has noted, "very few patents would ever issue." *Rouffet*, 149 F.3d at 1357.

Any obviousness inquiry therefore *should* entail asking whether a person of ordinary skill in the relevant art would have had a reason to combine the references in the manner claimed. *See* Federal Trade Commission, *To Promote Innovation: The Proper Balance of Competition and Patent*

Law and Policy, ch. 4, at 11 (2003) (noting hearing participants' "agree[ment] that the Federal Circuit's suggestion test asks a helpful question") ("*To Promote Innovation*"). Without making that inquiry in assessing obviousness, it would almost always be possible to mine the prior art, essentially cutting and pasting from different references, to find a basis for rejecting or invalidating a patent. The result: a heightened standard for patentability few modern inventions could meet.

C. Courts Applying The "Teaching, Suggestion, Or Motivation" Test Should Carefully Consider The Perspective Of A Person Having Ordinary Skill In The Art.

The "teaching, suggestion, or motivation" test is most effective when proper weight is placed on determining obviousness from the perspective of a person having ordinary skill in the relevant art ("PHOSITA"). In theory, the Federal Circuit has recognized the possibility that the "teaching, suggestion, or motivation" to combine prior art references can be derived from the level of ordinary skill in the art. *See Brown & Williamson*, 229 F.3d at 1125; *Kahn*, 441 F.3d at 988. But in practice, while properly recognizing that the mere incantation of PHOSITA's expertise is not enough on its own to suggest a combination, the Federal Circuit sometimes appears to minimize PHOSITA's role in the obviousness inquiry, requiring specific and detailed showings of "teaching, suggestion, or motivation" to combine when a skilled practitioner might have fashioned the same combination with far less meticulous instruction.[3] *See, e.g.*, *Rouffet*,

---

[3] *See, e.g.*, *To Promote Innovation*, ch. 4, at 14 ("Some applications of the suggestion test * * * appear almost to have read the PHOSITA out of the statute."); Eisenberg, *Obvious to Whom?*, 19 Berkeley Tech. L.J. at 894 (arguing that "the Federal Circuit has downgraded PHOSITA from the role of skilled evaluator of obviousness that the statute seems to contemplate to the more limited role of skilled reader of prior art").

149 F.3d at 1357 (reversing Board of Patent Appeal's finding of obviousness on grounds that the Board failed to "explain what specific understanding or technological principle within the knowledge of one of ordinary skill in the art would have suggested the combination" and instead "merely invoked the high level of skill in the field of the art")[4]; *Kotzab*, 217 F.3d at 1371 (chiding the PTO for lack of a "finding as to the specific understanding or principle within the knowledge of a skilled artisan that would have motivated one with no knowledge of Kotzab's invention to make the combination in the manner claimed").

In this case too, the Federal Circuit stated that the District Court had applied the "teaching, suggestion, or motivation" test too laxly by failing to make " 'finding[s] as to the specific understanding or principle within the knowledge of a skilled artisan that would have motivated one with no knowledge of [the] invention to make the combination in the manner claimed.' " Pet. App. 12a (quoting *Kotzab*, 217 F.3d at 1371). But a skilled practitioner often may not require the level of detailed and exacting instruction—verging on handholding—that the Federal Circuit appears to require before a "teaching, suggestion, or motivation" to combine could be found.

Instead of eliminating the "teaching, suggestion, or motivation" test altogether, it should suffice to bring greater clarity to its application by emphasizing both the PHOSITA's ability to combine prior art references and how to evaluate the level of skill in the art. *See To Promote Innovation*, ch. 4, at 15 (arguing that obviousness analysis "should ascribe to

---

[4] Mere invocation of a particular level of skill for combining prior art references is not sufficient alone to constitute a "teaching, suggestion, or motivation." A convincing line of reasoning derived from this level of skill is needed—but not necessarily a detailed explanation that requires *specific* scientific "technological principle[s]" to be identified.

the person having ordinary skill in the art an ability to combine or modify prior art references that is consistent with the creativity and problem-solving skills that in fact are characteristic of those having skill in the art"). As to the first—the PHOSITA's ability to recognize and create obvious combinations—*Hotchkiss* itself, the seminal case on obviousness, teaches the importance of the skilled practitioner's perspective in the analysis. The *Hotchkiss* Court held that a practitioner exercising "skill and judgment" in the relevant art may improve on existing inventions, but those improvements that merely reflect application of a skilled practitioner's judgment in combining old references do not warrant patent protection; such improvements are to be expected when a skilled practitioner brings his or her training to bear on a problem. *See Standard Oil Co. v. American Cyanamid Co.*, 774 F.2d 448 (Fed. Cir. 1985) (noting that a PHOSITA is "presumed to be one who thinks along the line of conventional wisdom in the art and is not one who undertakes to innovate, whether by patient, and often expensive, systematic research or by extraordinary insights, it makes no difference which."). The Federal Circuit's "teaching, suggestion, or motivation" standard should be carefully applied with this precept in mind. An experienced practitioner in the relevant field may not need any *express* "teaching, suggestion, or motivation" to combine old elements in a new way; one skilled in the relevant art does not need a blueprint or the teacher's manual to accomplish a new innovation. *See Kotzab*, 217 F.3d at 1370 (noting that a finding of obviousness may be based on an *implicit* "teaching, motivation or suggestion" to combine prior art references). An ordinary practitioner's skill in the art may, depending on the circumstances, itself be the "suggestion or motivation" to combine.

The Court should also clarify the means by which examiners or courts arrive at what constitutes a PHOSITA, to ensure that the appropriate perspective is brought to each obviousness inquiry. What constitutes a PHOSITA may include, in

addition to commonly considered factors such as education and years of experience, factors such as: (1) the types of problems encountered in the art; (2) the prior art solutions to those problems; (3) the rapidity with which innovations are made in the art; and (4) the sophistication of the technology. *See Ruiz* v. *A.B. Chance Co.*, 234 F.3d 654, 666-667 (Fed. Cir. 2000) (explaining these factors as relevant to assessing the level of ordinary skill in the art).

D. Eliminating The "Teaching, Suggestion, Or Motivation" Test Will Not Solve The Problems Attributed To It.

Many of the problems commonly attributed to the Federal Circuit's "teaching, suggestion, or motivation" test also bear only slight relation to it, such that discarding the test is unlikely to solve those problems. The Solicitor General and some amici have suggested, for example, that the test, which requires specific findings supporting the conclusion of "teaching, suggestion, or motivation," makes it difficult to obtain summary judgment on obviousness. *See* Br. for United States on Pet. for Cert. at 17; Br. of Cisco Systems on Pet. for Cert. at 14-16. But the obviousness test is made up of *many* factual inquiries; *Graham* itself observes as much. *See Graham*, 383 U.S. at 17; *see also Connell* v. *Sears, Roebuck & Co.*, 722 F.2d 1542, 1547 (Fed. Cir. 1983) ("The obviousness issue may be in some cases complex and complicated, on both fact and law."). And to the extent the Federal Circuit's requirement of "clear and convincing" evidence of a "teaching, suggestion, or motivation" inhibits summary judgment, that evidentiary standard is a function of the statutory presumption of validity applied to patents; it is unrelated to the test. *See American Hoist & Derrick Co.* v. *Sowa & Sons, Inc.*, 725 F.2d 1350, 1360 (Fed. Cir. 1984) ("[Section] 282 creates a presumption that a patent is valid and imposes the burden of proving invalidity on the attacker.

That burden is constant and never changes and is to convince the court of invalidity by clear evidence.").

Complaints about the proliferation of so-called "business method" patents, licensing pools, and non-practicing entities likewise bear only passing relation to the obviousness requirement. *See, e.g.*, *To Promote Innovation*, ch. 4, at 10-14; National Research Council, *A Patent System for the 21st Century* 5-6 (2004). These purported problems with the patent system are as likely to stem from institutional factors involving the PTO, the nature of particular industries, and the interpretation of other provisions in the Patent Act, as they are to the issuance of patents on inventions that may fall below the threshold of nonobviousness set by Section 103. *See, e.g.*, Carl Shapiro, *Patent System Reform: Economic Analysis and Critique*, 19 Berkeley Tech. L.J. 1017 (2004) (questioning need for reforms suggested to the patent system in FTC and National Research Council reports). To the extent they are relevant to the obviousness inquiry, moreover, the solution amici propose here—giving greater weight to the role of the PHOSITA in the obviousness inquiry—will ameliorate many such issues.

II. IMPOSING A HEIGHTENED STANDARD FOR DETERMINING OBVIOUSNESS OF CERTAIN CATEGORIES OF PATENTS IS INCONSISTENT WITH SECTION 103 AND THIS COURT'S PRECEDENT AND WOULD HARM INNOVATION.

It would be a mistake to discard the "teaching, suggestion, or motivation" test for all of the reasons just explained. And it would be an even greater mistake to replace the test with a more stringent standard of nonobviousness for patents claimed as a combination of elements. *See, e.g.*, Pet. at 14-16 (suggesting that a heightened standard of validity should apply to combination patents); *cf.* John H. Barton, *Non-Obviousness*, 43 IDEA: The Journal of Law & Tech. 475, 503 (2003) (advocating elevating nonobviousness standard

for combination patents); Mark A. Lemley & David W. O'Brien, *Encouraging Software Reuse*, 49 Stan. L. Rev. 255, 302 (1997) (endorsing heightened nonobviousness test for software combination patents).

A. Section 103 And This Court's Precedent Do Not Support A Heightened Standard Of Patentability For Combination Patents.

Section 103 treats all patents the same: an invention is unpatentable "if the differences between the subject matter sought to be patented and the prior art are such that the subject matter as a whole would have been obvious at the time the invention was made to a person having ordinary skill in the art to which said subject matter pertains." 35 U.S.C. § 103(a). Section 103(a)'s closing sentence confirms that the statutory obviousness standard does not distinguish among patents based on whether they incorporate elements from the prior art: "Patentability shall not be negatived by the manner in which the invention was made." *Id.*; *see also Connell*, 722 F.2d at 1549 ("There is no classification entitled 'combination patents,' " in Section 103, or elsewhere "in the [Patent Act].").[5]

---

[5] The legislative history surrounding passage of the 1952 Patent Act confirms Congress's intent to establish one standard for determining whether inventions are obvious and unpatentable. *See* S. Rep. No. 1979, at 6 (1952) (statutory nonobviousness standard intended to ensure "uniformity and definiteness"); H.R. Rep. No. 1923, at 7 (1952) (same); *see also Graham*, 383 U.S. at 16-17 (noting the same).

The Court has also identified the importance of uniformity in other aspects of the patent system. *Sears, Roebuck & Co.* v. *Stiffel Co.*, 376 U.S. 225, 230-231 (1964) ("[T]he patent system is one in which uniform federal standards are carefully used to promote invention while at the same time preserving free competition."); *see also Florida Prepaid Postsecondary Educ. Expense Bd.* v. *College Sav. Bank*, 527 U.S. 627, 650 (1999) (noting that "consis-

This Court has also stressed the need for uniformity in evaluating obviousness. The *Graham* Court recognized that "[w]hat is obvious is not a question upon which there is likely to be uniformity of thought in every given factual context," but expressed confidence that "strict observance of the requirements laid down here will result in that uniformity and definiteness which Congress called for in the 1952 Act." *Graham*, 383 U.S. at 18. Rigorous adherence to the *Graham* criteria—which do not distinguish among classes or tiers of favored or less-favored patents—fosters the uniformity Congress sought to achieve in Section 103.

Nor is application of a heightened obviousness standard to combination patents supported by *Anderson's-Black Rock* v. *Pavement Co.*, 396 U.S. 57 (1969), or *Sakraida* v. *AG Pro, Inc.*, 425 U.S. 273 (1976), as some have suggested. *See* Pet. at 14-16. The Court in both cases invalidated patent claims combining various elements known in the prior art, noting that the combination patents did not achieve a "synergistic result." *Anderson's-Black Rock*, 396 U.S. at 61; *Sakraida*, 425 U.S. at 282 (noting that patent could not "be characterized as synergistic"). These references to the "synergi[es]" that occasionally result from combining prior art in a new and unexpected way, however, did not add an additional layer of inquiry to the question whether a patent combining multiple prior art references clears the obviousness hurdle To the contrary: the Court in both cases repeatedly relied on *Graham* in conducting its obviousness analysis. *See Sakraida*, 425 U.S. at 279; *Anderson's-Black Rock*, 396 U.S. at 61. The better reading of the Court's comments about "synergistic" effects is that they were "merely to note the advent of a phenomenon which may emanate from a combination claim, without any indication by the Court that the phenomenon must be present in every case to satisfy the

---

tency [and] uniformity * * * are matters of overriding significance" in patent law) (Stevens, J., dissenting).

requirements of Section 103." *Rengo Co.* v. *Molins Mach. Co.*, 657 F.2d 535, 543 (3d Cir. 1981) (quotation omitted). *See also Stratoflex, Inc.* v. *Aeroquip Corp.*, 713 F.2d 1530, 1540 (Fed. Cir. 1983) (noting that a "requirement for 'synergism' or a 'synergistic effect' is nowhere found in the [patent] statute" and that a "reference to a 'combination patent' is equally without support in the statute"); *Custom Accessories, Inc.* v. *Jeffrey-Allan Indus., Inc.*, 807 F.2d 955, 959 (Fed. Cir. 1986) (same).

B. A Heightened Standard For Determining Whether A Combination Patent Is Nonobvious Creates A Substantial Risk Of Impeding Innovation.

The experience of the automobile industry over the past century confirms that adopting a heightened standard of nonobviousness for patents claimed as a combination of elements would not only conflict with the plain language of Section 103; it would harm innovation. Indeed, the patents most vulnerable to an obviousness attack in a regime that encourages more rigorous review of combination patents may be the ones that provide the most tangible benefits to society.

Innovations in the automotive industry often spring from incremental improvements on preexisting ideas. The path from an idea to automotive innovation generally requires a succession of inventions that build upon earlier inventions—particularly when the inventor tries to make an innovation available and affordable for average consumers. It would impede technological progress in the industry to subject a manufacturer's hard-won improvements to a more rigorous obviousness inquiry merely because they incorporate elements from prior art.[6]

---

[6] Unlike computer-based industries, moreover, the mechanical-structural inventions of the automobile industry do not as readily lend themselves to copyright or trade secret protection. Thus a

A few examples illustrate this point. One of the most successful automotive inventions in the twentieth century was the electric starter. First patented in 1900, *see* U.S. Patent No. 657,662 (filed March 14, 1900), the electric starter was not incorporated into an automobile until 1912, when Cadillac incorporated into its vehicle design a starter based on a prototype developed from a competing patent.[7] Even then, it still took years of revisions, resulting in multiple additional patents, before electric starters became ubiquitous on automobiles.[8] By the time electric starters became a standard feature—complete with patent protection[9]—it would have been easy to characterize the ultimate innovation as little more than a combination of known parts. Yet denying patent protection for this reason alone would likely have discouraged the huge front-end investment that was required to pursue future innovations in the area.

Safety glass is another revolutionary innovation in the automobile industry that occurred only as a result of successive improvements and numerous patents over many years. The French chemist Edouard Benedictus first invented laminated glass in 1903 after noticing that a glass flask

---

patent may be the only available means for manufacturers like Ford to protect its inventions.

[7] *See* General Motors, History, *http://gm.com/company/corp_info/history/gmhis1910.html.*

[8] *See* U.S. Patent Nos. 657,662 (filed Sept. 11, 1900); 675,848 (filed June 4, 1901); 745,157 (filed Nov. 24, 1903); 842,827 (filed Jan. 29, 1907); 997,003 (filed July 4, 1911); 1,064,765 (filed June 7, 1913); 1,117,378 (filed Nov. 17, 1914); 1,171,055 (filed Feb. 8, 1916); 1,229,754 (filed June 12, 1917); 1,240,348 (filed Sept. 18, 1917); 1,241,990 (filed Oct. 2, 1917); 1,243,422 (filed Oct. 16, 1917); 1,372,650 (filed Mar. 22, 1921).

[9] *See* U.S. Patent No. 1,372,650 (filed Mar. 22, 1921).

coated with cellulose nitrate did not shatter when dropped.[10] Benedictus soon began developing safety glass for use in automobile windshields.[11] But it was not until 1928 that laminated safety glass became widespread when Ford made it standard on the Model A.[12] The idea of using laminated safety glass in automobile windshields would have seemed obvious by the time safety glass was incorporated into the Model A's design as a patented invention.[13] But that development came about only because Ford refined, developed, and patented methods of producing laminated glass in continuous rolls that lowered manufacturing costs and made the idea commercially feasible. Ford's ability to capitalize on successive refinements to safety glass—and to secure patent protection for those progressive steps—gave the company the necessary incentive to continue improving its innovation.

The facts of this case provide still another example. The first adjustable gas pedal assembly was patented as early as 1915, but even today adjustable pedal assemblies are not ubiquitous on automobiles.[14] Although an adjustable pedal assembly may appear to involve relatively straightforward technology, developing and manufacturing a reliable and cost-effective device that controls the speed of an automobile is a complex undertaking.

Automotive innovations begun one hundred years ago continue still. Current refinements to starters, safety glass,

---

[10] *See* IHS, Automotive Glazing: Origins of the Art, *http://auto.ihs.com/newsletters/auto-july05-2.jsp.*

[11] *See id.*

[12] *See* The Henry Ford, History of the Rouge, *http://thehenryford.org/rouge/history2.asp.*

[13] *See* U.S. Patent No. 1,616,405 (filed Feb. 1, 1927).

[14] *See* U.S. Patent No. 1,128,975 (filed March 10, 1914).

and adjustable pedal assemblies show that innovation in the automobile industry, as in other industries involving large-scale commercial manufacturing, often results from incremental improvements that appear in retrospect to be almost inevitable. *See McGinley*, 262 F.3d at 1351 ("The genius of invention is often a combination of known elements which in hindsight seems preordained."). Those incremental refinements—the refinements that transform inchoate inventions into complete and useful ones—are as important as the first iteration of an invention. It is the prospect of patent protection on successive improvements to an initial design that often makes investing in further improvements worthwhile. Far from signaling a fundamental breakdown in the patent system, these incremental innovations illustrate the continued importance of patent protection to development and competition in the automobile industry.

CONCLUSION

For the foregoing reasons, amici respectfully submit that the case be remanded to the Federal Circuit for that court to further consider the perspective of a person having ordinary skill in the art in applying its "teaching, suggestion, or motivation" test.

Respectfully submitted,

WILLIAM J. COUGHLIN
FRANKLIN A. MACKENZIE
DAMIAN PORCARI
JENNIFER M. STEC
DANIEL M. STOCK
FORD GLOBAL
TECHNOLOGIES, LLC
330 Town Center Drive
Dearborn, Michigan 48126
(313) 323-1289

RALPH EDWIN SMITH
DAIMLERCHRYSLER
CORPORATION
800 Chrylser Drive
Auburn Hills, Michigan 48326
(248) 944-6519

CATHERINE E. STETSON*
HOGAN & HARTSON L.L.P.
555 Thirteenth Street, N.W.
Washington, D.C. 20004
(202) 637-5491

* Counsel of Record

Counsel for Amici Curiae

S62N

(23)

Supreme Court, U.S.
FILED
AUG 18 2006
OFFICE OF THE CLERK

No. 04-1350

In the Supreme Court of the United States

KSR INTERNATIONAL CO.,

Petitioner,

v.

TELEFLEX INC. and
TECHNOLOGY HOLDING CO.,

Respondents.

On Writ of Certiorari to the United States Court of Appeals for the Federal Circuit

BRIEF OF PROFESSOR LEE A. HOLLAAR AS *AMICUS CURIAE* URGING AFFIRMING IN PART AND VACATING IN PART

PROFESSOR LEE A. HOLLAAR
Amicus Curiae

DAVID M. BENNION
(Counsel of Record)
201 SOUTH MAIN STREET
SUITE 1800
SALT LAKE CITY, UT 84111
(801) 532-1234
Counsel for Amicus Curiae

Becker Gallagher Legal Publishing, Inc. 800.890.5001

TABLE OF CONTENTS

Table of Authorities ii

Interest of the Amicus Curiae 1

Summary of the Argument 2

Argument 3

Examination And The *Prima Facie* Case 4

The Federal Circuit Test: Requiring A Reason, Or Motivation, To Combine Prior Art References 6

The Federal Circuit Test Gives A Wide Range Of Options In Making The *Prima Facie* Case 10

"Common Sense and Common Knowledge" 11

Some Examiners Do Not Provide Objective Reasons For Their Rejections, Regardless Of The Test 12

"A Patent Is Presumed Valid" 13

"Clear and Convincing Evidence" 15

The Presumption Of Administrative Competence . . . 20

Does It Make A Difference? 22

Having Two Standards Of Evidence Should Not Substantially Complicate Patent Litigation 24

Promotion Of Sound Policy Objectives 27

Concusion 30

TABLE OF AUTHORITIES

Cases

In re Adams,
356 F.2d 998 (CCPA 1966) 6

Amer. Hoist & Derrick v. Sowa,
725 F.2d 1350 (Fed. Cir. 1984) 14, 22, 27

Austin Machinery v. Buckeye Traction Ditcher,
13 F.2d 697 (6th Cir. 1926) 18

Candela Laser v. Cynosure,
862 F.Supp. 632 (D. Mass. 1994) 3

Cleveland Trust v. Schriber-Schroth,
92 F.2d 330 (6th Cir. 1937) 19

In re Dembiczak,
175 F.3d 994 (Fed. Cir. 1999) 7, 9, 10, 12

Dickenson v. Zurko,
527 U.S. 150 (1999) 20, 21, 22, 26

Director, OWCP v. Greenwich Collieries,
512 U.S. 267 (1994) 19

In re Fine,
837 F.2d 1071 (Fed. Cir. 1988) 6

Graham v. John Deere Co. of Kansas City,
383 U.S. 1 (1966) 6, 9, 13, 15, 25, 30

Hotchkiss v. Greenwood,
11 How. 248 (1851) 4

In re Kahn,
441 F.3d 977 (Fed. Cir. 2006) 6, 8

Knoll Pharm.v. Teva Pharms. USA,
367 F.3d 1381 (Fed. Cir. 2004) 15

In re Milne,
140 F.2d 1003 (CCPA 1944) 8

Morgan v. Daniels,
153 U.S. 120 (1894) 16

In re Piasecki,
745 F.2d 1468 (Fed. Cir. 1984) 4

Potts v. Creager,
155 U.S. 597 (1895) 5

Radio Corporation of America v. Radio Engineering Laboratories,
293 U.S. 1 (1934) 3, 15, 16, 17, 18, 19, 20

Ruz v. A.B.Chance,
234 F.3d 654 (Fed Cir. 2000) 10

Schriber-Schroth v. Cleveland Trust,
305 U.S. 47 (1938) 19

Smith v. Hall,
301 U.S. 216 (1937) 19

Teleflex v. KSR,
119 Fed. Appx. 282 (Fed. Cir. 2005) 15, 30

Williams Mfg. v. United Shoe Machinery,
316 U.S. 364 (1942) 19

Statutes

5 U.S.C. § 706 20

35 U.S.C. § 102 4

35 U.S.C. § 103 . . . . . 2, 4, 6, 8, 13, 25

35 U.S.C. § 141 20

35 U.S.C. § 145 20

35 U.S.C.§ 282 . . . . . 3, 14, 15, 22

35 U.S.C. § 303 21

35 U.S.C. § 305 28

35 U.S.C. § 314 28

Other Authorities

Federal Trade Commission Report, *To Promote Innovation: The Proper Balance of Competition and Patent Law and Policy*, available at http://www.ftc.gov/os/2003/10/innovationrpt.pdf. 22, 23, 24

Charles E. Phipps, *The Presumption of Administrative Correctness: The Proper Basis for the Clear and Convincing Evidence Standard*, 10 Fed. Cir. Bar J. 143 (2000) . . . 15

Pub. L. No. 94-593, 66 Stat. 792 14

Federal Courts Improvement Act of 1982,
Pub. L. No. 97-164, 96 Stat. 25 14

Brief Of Professor Lee A. Hollaar As Amicus Curiae Urging Affirming In Part And Vacating In Part[1]

Interest Of The Amicus Curiae

Lee A. Hollaar is a professor in the School of Computing at the University of Utah, where he teaches courses in computer and intellectual property law and computer systems and networking. He is the author of *Legal Protection of Digital Information*,[2] and was a committee fellow with the Senate Committee on the Judiciary, where he worked on patent reform legislation and what became the Digital Millennium Copyright Act, and was a visiting scholar at the Court of Appeals for the Federal Circuit.

As a Registered Patent Agent involved with the prosecution of patent applications since 1989, he is concerned that retreating from requiring a reason to combine references

---

[1] In accordance with Supreme Court Rule 37.6, counsel listed on the cover states that this brief was authored by amicus curiae Professor Hollaar and reviewed by counsel, and that counsel to a party did not author this brief in whole or in part. No person other than the amicus curiae made a monetary contribution to the preparation or submission of this brief.

Blanket consents to the filing of amicus briefs have been previously filed with the Court by the parties.

Professor Hollaar wishes to thank his research assistant, John Knight, for his help in preparing this brief.

[2] BNA Books (2002), also available online at http://digital-law-online.info.

will make it difficult to rebut a hindsight reconstruction of an applicant's invention by the examiner. As an expert witness in patent litigation, he is concerned that unwarranted deference is given to facts not considered by the examiner during the patent prosecution are presented by the patent owner.

Summary Of The Argument

Section 103 of the Patent Act of 1952 added a new requirement for patentability: that the claimed invention not be "obvious at the time the invention was made to a person having ordinary skill in the art ..."[3] Because such an evaluation is prone to hindsight on the part of the patent examiner, the Court of Customs and Patent Appeals (CCPA) and its successor, the Court of Appeals for the Federal Circuit, have consistently required more than just an examiner's feeling that an invention is obvious. In particular, what is called the "Federal Circuit test" requires some objective reason, or motivation, if two or more references are to be combined to show the obviousness of a claimed invention.

Although developed in the context of appeals of the unpatentability decisions of the Patent Office, the Federal Circuit test now also applies to courts determining the validity of issued patents. But while the test is a good prophylactic against hindsight, when combined with the requirement of showing invalidity by clear and convincing evidence it becomes difficult to invalidate a patent even when prior art not considered by the examiner is brought forward.

---

[3] 35 U.S.C. § 103.

The "clear and convincing evidence" requirement springs from this Court's decision in *Radio Corporation of America v. Radio Engineering Laboratories*.[4] That decision only considered the evidentiary requirement when the same case was being presented by a supposedly-new party that was really just a front for the losing party in another case. This Court used a heightened standard as a substitute for *res judicata* when another party is involved.

Lower courts have read far too much into that case, and the statutory presumption of patent validity,[5] holding that a party must show invalidity with clear and convincing evidence. While a presumption of administrative correctness[6] applies to decisions of the Patent Office, there is no reason to impose a heightened evidentiary requirement for prior art (or other fact-finding) not considered by the examiner. Such a requirement makes little sense and allows bad patents to remain in force, contrary to sound public policy.

Argument

The Patent Act of 1952 added a new condition for patentability – that the invention not be "obvious at the time the invention was made to a person having ordinary skill in

---

[4] 293 U.S. 1 (1934).

[5] 35 U.S.C. § 282.

[6] "In addition to the presumption of validity, a presumption of administrative correctness attaches to the decision by the PTO to issue a patent." *Candela Laser v. Cynosure*, 862 F.Supp. 632,639 (D. Mass. 1994).

the art ..."[7] – as a replacement for the ill-defined concept of "invention." This was a codification of the requirement first formulated by this Court in *Hotchkiss v. Greenwood*.[8]

The determination of obviousness is fundamental not only during patent litigation, but also during the examination of a patent application. However, the context in which it is applied in those two instances is fundamentally different.

Examination And The *Prima Facie* Case

To shift the burden in the prosecution of a patent application from the Patent Office[9] to the applicant, the examiner must make a *prima facie* case for unpatentability.[10]

If the applicant rebuts that *prima facie* case, the burden shifts back to the examiner until a new *prima facie* case is made. This continues until the patent is granted or the rejection is final because the applicant cannot rebut the last *prima facie* case.

---

[7] 35 U.S.C. § 103.

[8] 11 How. 248 (1851). For a discussion of the progression from *Hottchkiss v. Greenwood* to the present test, see John Knight, "The Motivation for the Federal Circuit Test," http:/digital-law-online.info/papers/jk/tsm.htm.

[9] "A person shall be entitled to a patent *unless* ..." 35 U.S.C. § 102 (emphasis added).

[10] For a discussion of the *prima facie* case as a procedural device and its history, see *In re Piasecki*, 745 F.2d 1468, 1471-1473 (Fed. Cir. 1984).

For rejections because of obviousness, the reason for the appeal is all too often the use of hindsight by the examiner, using the applicant's own teaching to assemble a collection of prior art documents and then claiming that the combination of those documents renders the invention obvious.

Since the prior art selected by the examiner should contain every aspect of the claimed invention (because, after all, that was the examiner's goal in the first step), there will be no difference between what is shown collectively in those documents and the claimed invention.[11] At that point, some examiners simply make a conclusory statement that it "would have been obvious for a person with ordinary skills in the art to combine the references." The examiner may go a little further, saying that all the references have some common attribute with the claimed invention, something again that is likely to be true for most inventions and the selected prior art references.[12] Or the examiner may say that the invention is

---

[11] Sometimes that isn't the case. It is not uncommon for an applicant to challenge an examiner's determination of obviousness by pointing out that a particular claim element is not contained in any of the cited references, or that the examiner has misunderstood a reference, often by saying that it teaches more than it really does because the examiner has viewed the reference through the lens of the patent application.

[12] Sometimes the examiner will state that the references are "analogous art" to the claimed invention as a justification for their combination. That is a misunderstanding of the doctrine first stated by this Court in *Potts v. Creager* that prior art in a different area is to be considered only when "the new use be so analogous to the former one that the applicability of the device to its new use would occur to a person of ordinary mechanical skill ..." 155 U.S. 597, 608 (1895). Rather than being a justification for combining references in the same art, it is a reason for excluding references

"inherent" from the components that make it up. But as Judge Rich observed in *In re Adams*, "Of course it is inherent, otherwise appellant's invention would not work."[13]

None of those provide the reasoned motivation to combine the prior art references to make a *prima facie* case that the applicant can then attempt to rebut.

The Federal Circuit Test: Requiring A Reason, Or Motivation, To Combine Prior Art References

To counter the use of hindsight by an examiner when determining the obviousness of an invention, the Federal Circuit (and its predecessor, the Court of Customs and Patent Appeals) developed and refined a test that requires that the examiner provide an objective reason why a person skilled in the art would combine the prior art references.

> The PTO has the burden under section 103 to establish a *prima facie* case of obviousness. It can satisfy this burden only by showing some objective teaching in the prior art or that knowledge generally available to one of ordinary skill in the art would lead that individual to combine the relevant teachings of the references.[14]

---

from other arts. "The motivation-suggestion-teaching test picks up where the analogous art test leaves off and informs the *Graham* analysis." *In re Kahn*, 441 F.3d 977, 987 (Fed. Cir. 2006).

[13] 356 F.2d 998, 1001 (CCPA 1966).

[14] *In re Fine*, 837 F.2d 1071, 1074 (Fed. Cir. 1988).

The objective reason should come from "the knowledge of one of ordinary skill in the art" of the invention, or perhaps from "the nature of the problem to be solved" by the invention.[15] It is hard to see any other source for the reason or motivation to combine references than what is known in the art and the nature of the problem.

As noted in a later case,

> the best defense against the subtle but powerful attraction of a hindsight-based obviousness analysis is rigorous application of the requirement for a showing of the teaching or motivation to combine prior art references. Combining prior art references without evidence of such a suggestion, teaching, or motivation simply takes the inventor's disclosure as a blueprint for piecing together the prior art to defeat patentability – the essence of hindsight.[16]

The Federal Circuit has noted that an objective motivation to combine "more often comes from the teachings of the pertinent references."[17] But the Federal Circuit test *does not* require a single reference provide the motivation to combine the other prior art references. The CCPA made this clear over six decades ago.

---

[15] See *In re Dembiczak*, 175 F.3d 994, 999 (Fed. Cir. 1999).

[16] *In re Dembiczak*, 175 F.3d 994, 999 (Fed. Cir. 1999) (citations omitted).

[17] See *In re Dembiczak*, 175 F.3d 994, 999 (Fed. Cir. 1999).

> Appellant contends that references may not properly be combined unless the cited art teaches how to combine the cited structures ...
>
> If appellant's contention should be sustained, then it would never be necessary to combine references to negative patentability, for if one of the references must teach the combination claimed, that reference would be a complete anticipation of the invention and there would be no occasion to combine references.[18]

The Federal Circuit test provides the applicant with objective reasons why the examiner finds the invention obvious.

> [R]ejections on obviousness grounds cannot be sustained by mere conclusory statements; instead, there must be some articulated reasoning with some rational underpinning to support the legal conclusion of obviousness. This requirement is as much rooted in the Administrative Procedure Act, which ensures due process and non-arbitrary decisionmaking, as it is in § 103.[19]

Requiring a motivation to combine allows the applicant to challenge the examiner's reasons by either showing that they are in error or by providing new evidence to rebut them. In

---

[18] *In re Milne*, 140 F.2d 1003, 1003 (CCPA 1944).

[19] *In re Kahn*, 441 F.3d 977, 989 (Fed. Cir. 2006).

Graham v. John Deere Co. of Kansas City, this Court noted the nature of such new evidence.

> Such secondary considerations as commercial success, long felt but unsolved needs, failure of others, etc., might be utilized to give light to the circumstances surrounding the origin of the subject matter sought to be patented.[20]

Requiring a reason for rejecting a claim as obvious not only allows the patent applicant to rebut the examiner's *prima facie* case, but also allows the decision of the examiner to be properly reviewed, first by the Board of Patent Appeals and Interferences, then by the courts. Looking at the results of applying the test from its own perspective, the Federal Circuit noted:

> In addition to demonstrating the propriety of an obviousness analysis, particular factual findings regarding the suggestion, teaching, or motivation to combine serve a number of important purposes, including: (1) clear explication of the position adopted by the Examiner and the Board; (2) identification of the factual disputes, if any, between the applicant and the Board; and (3) facilitation of review on appeal.[21]

---

[20] 383 U.S. 1, 17-18 (1966). However, for an invention that has not been commercialized at the time of the patent examination, it may be difficult or impossible to show secondary considerations like commercial success.

[21] *In re Dembiczak*, 175 F.3d 994 (Fed. Cir. 1999).

The Federal Circuit Test Gives A Wide Range Of Options In Making The *Prima Facie* Case

The Federal Circuit test allows different ways that motivation can be shown from the knowledge of those skilled in the art or the nature of the problem, although the most common way during the examination of a patent application will be prior art references that show the necessary suggestion, teaching, or motivation to combine.

But when there are not prior art references that provide the motivation to combine, other options remain available to the examiner. The Federal Circuit test particularly provides for the showing of obviousness based on "the knowledge of one of ordinary skill in the art"[22] either "explicitly or implicitly."[23] Of course, the examiner must provide objective evidence that includes a description of the person of ordinary skill in the art and why such person would have the requisite knowledge.[24]

There is no reason that an examiner unable to locate a motivating prior art reference cannot make a reasoned *prima facie* case of motivation based on either "the knowledge of one of ordinary skill in the art, or, in some cases, from the nature of the problem to be solved," as the Federal Circuit

---

[22] *In re Dembiczak*, 175 F.3d 994, 999 (Fed. Cir. 1999).

[23] *Ruz v. A.B.Chance*, 234 F.3d 654, 665 (Fed. Cir. 2000).

[24] This is more common in litigation, where each side will offer expert opinions on the nature of the person with ordinary skill in the art and why such person would be motivated to combine the references (or not) to get the claimed invention.

test allows, if the invention is truly obvious under patent law.[25]

"Common Sense and Common Knowledge"

In its amicus brief urging this Court to take this case, the United States hints that the Federal Circuit test should be replaced with one that allows an examiner to reject a claim as obvious based on the examiner's "common sense and common knowledge."[26]

If "the combination was so obvious to persons skilled in the art" as the Government feels is one of the problem areas, then it should be simple for an examiner to make a *prima facie* case based on "the knowledge of one of ordinary skill in the art," an option under the Federal Circuit test, or "the nature of the problem to be solved," another option. All the Federal Circuit test requires is some objective reason, not just a conclusory statement.

Were an examiner allowed simply to state that "common sense and common knowledge" renders the invention obvious, or even provides the motivation to combine the prior art

---

[25] Given that an examiner has only about twenty hours to spend on the examination of a patent from the time he or she first picks up the application until the patent is allowed or the application is finally rejected, it is not surprising that an examiner does not want to spend a great deal of time documenting the necessary fact-finding if a motivating document is not available. But that is a criticism of the performance quota for an examiner, and not a reason to lessen the Federal Circuit's requirement of a reasoned motivation to combine prior art references.

[26] Brief of the United States as Amicus Curiae, at 14.

references, it would be difficult for the applicant to rebut the examiner's *prima facie* case for obviousness. After all, who wants to tell a decision-maker like the examiner that his or her "common sense" is wrong?

Some Examiners Do Not Provide Objective Reasons For Their Rejections, Regardless Of The Test

The United States, in its amicus brief asking this Court to take this case, also mischaracterizes *In re Dembiczak*[27] as saying that a "lawn trash bag having a Halloween pumpkin design is not prima facie obvious in the absence of evidence of suggestion to combine normal trash bag with references describing pumpkin designs on paper bags."[28] That certainly sounds like an obvious patent that should not have been issued.[29]

But any problem with that patent application does not stem from the Federal Circuit test. Not only had the examiner and the Board of Patent Appeals and Interferences given no reasoned motivation to combine,

> nor does the Board make specific – or even inferential – findings concerning the identification of the relevant art, the level of ordinary skill in the art, the nature of the problem to be solved, or any other factual

---

[27] 175 F.3d 994 (Fed. Cir. 2002).

[28] Brief of the United States as Amicus Curiae, at 14, n. 6.

[29] And, in fact, it appears that is the case. A search of the Patent Office's database does not turn up a utility patent being issued for that application, although it does show two design patents.

> findings that might serve to support a proper obviousness analysis.[30]

In other words, the examiner and the Board not only did not meet the requirements of the Federal Circuit test, but also this Court's *Graham* test:

> Under § 103, the scope and content of the prior art are to be determined; differences between the prior art and the claims at issue are to be ascertained; and the level of ordinary skill in the pertinent art resolved. Against this background, the obviousness or nonobviousness of the subject matter is determined.[31]

The solution to the problem of bad patents being granted is not to back away from the Federal Circuit's test, whose requirement of a reasoned analysis of motivation to combine properly acts as a bulwark against hindsight reconstructions, but to require examiners actually apply the test for obviousness instead of simply making a conclusory statement that will not stand on appeal.

"A Patent Is Presumed Valid"

But there is a problem when the Federal Circuit test, developed initially by the Federal Circuit's predecessor court

---

[30] 175 F.3d at 1000.

[31] *Graham v. John Deere Co. of Kansas City*, 383 U.S. 1, 17 (1966).

in the context of patent prosecution, is used in litigation.[32] The problem is not with the test itself, but with the burden placed on the party attempting to show that a patented invention is obvious with "clear and convincing evidence," even when the evidence was not before the examiner during the patent's prosecution.

Section 282 of the Patent Act of 1952 states that "A patent is presumed valid. The burden of establishing invalidity of a patent or any claim thereof shall rest on the party asserting such invalidity."[33]

This establishes a permanent burden of going forward imposed on the challenger of a patent.[34] Unlike the *prima facie* case for obviousness that when made by a patent examiner shifts the burden from the examiner to the applicant, the burden always rests with the challenger of a patent. This simply recognizes that it is impossible for a patent owner to

---

[32] The Court of Appeals for the Federal Circuit took jurisdiction for appeals in patent litigation with its establishment on October 1, 1982. See the Federal Courts Improvement Act of 1982, Pub. L. No. 97-164, 96 Stat. 25.

[33] Pub. L. No. 94-593, 66 Stat. 792. Subsequent amendments to 35 U.S.C. § 282 have separated the two sentences.

[34] For an excellent discussion of presumption of validity, see *Amer. Hoist & Derrick v. Sowa*, 725 F.2d 1350, 1358-1360 (Fed. Cir. 1984). The author of that opinion, Judge Giles Sutherland Rich, was one of the principal authors of the Patent Act of 1952, which codified the presumption of validity.

prove that there is no prior art anywhere in the world, which would be necessary to prove that a patent is valid.[35]

"Clear and Convincing Evidence"

Unlike a patent examiner trying to make a *prima facie* case for obviousness, the Federal Circuit now requires a litigant hoping to show that a patent is invalid for obviousness, as in this case, by "clear and convincing evidence,"[36] a standard substantially higher than the preponderance of the evidence required for fact-finding in most other civil litigation. That heightened evidentiary requirement is different from the presumption of validity's burden of going forward. In the words of one commentator, using a tennis analogy, "§ 282 merely determines who serves first, but does not regulate the height of the net."[37]

The requirement for clear and convincing evidence of patent invalidity stems from a misunderstanding of this Court's decision in *Radio Corporation of America v. Radio*

---

[35] This is the reason why a trial court never finds that a patent is valid, but instead that, based on the evidence presented, it is "not invalid."

[36] "[T]he accused infringer must prove by clear and convincing evidence that each claim that is challenged cannot reasonably be held to be non-obvious." *Teleflex v. KSR*, 119 Fed. Appx. 282, 285 (Fed. Cir. 2005), citing *Knoll Pharm.v. Teva Pharms. USA*, 367 F.3d 1381, 1383 (Fed. Cir. 2004).

[37] Charles E. Phipps, *The Presumption of Administrative Correctness: The Proper Basis for the Clear and Convincing Evidence Standard*, 10 Fed. Cir. Bar J. 143, 160 (2000).

Engineering Laboratories,[38] a case about who was really the inventor of the two key components of radios – the use of feedback and the vacuum tube ("audion") oscillator – and the intense rivalry between De Forest and Armstrong. The opinion recounts the convoluted course of litigation between these two inventors, including Armstrong winning the interference in the Patent Office only to have it reversed by the Court of Appeals for the District of Columbia, in a role it played before the establishment of the CCPA.

"The fight was far from ended."[39] Three separate suits, in the District of Columbia, Pennsylvania, and Delaware continued the fight, with De Forest winning all three as well as at the Third Circuit. This Court summarily affirmed that decision,[40] citing *Morgan v. Daniels*:

> [W]here the question decided in the patent office is one between contesting parties as to priority of invention, the decision there made must be accepted as controlling upon that question of fact in any subsequent suit between the same parties, unless the contrary is established by testimony which in character and amount carries thorough conviction.[41]

---

[38] 293 U.S. 1 (1934).

[39] 293 U.S. at 4.

[40] 278 U.S. 562 (1928).

[41] 153 U.S. 120, 125 (1894).

But Armstrong was not going to give up so easily.

> One might have supposed that controversy would have been stilled after all these years of litigation. It proved to be not so. The petitioners, after repelling every assault from within the ranks of rival claimants, found it necessary to meet a challenge from without. The respondent, Radio Engineering Laboratories, Inc., allying itself with Armstrong, who is paying its expenses, insists that the invention is at large for the reason that De Forest, who received the patents, is not the true inventor, and that Armstrong, who is the inventor, is barred by a final judgment, conclusive between himself and the pretender, from obtaining the patent that is due him, and with it an exclusive right. The evidence in this suit for an infringement is a repetition, word for word, of the evidence in the earlier suits, so far as material to the conflicting claims of Armstrong and De Forest. What has been added is so nearly negligible that, to all intents and purposes, the records are the same.[42]

But there was a problem.

> The judgments in the suits between Armstrong and De Forest and their respective assignees are not conclusive upon the respondent, a stranger to the record. This is so by force of

---

[42] 293 U.S. at 6.

> the accepted limitations of the doctrine of *res judicata*.[43]

This Court resolved that problem by requiring heightened scrutiny of for the new attack made on a patent.

> A patent regularly issued, and even more obviously a patent issued after a hearing of all the rival claimants, is presumed to be valid until the presumption has been overcome by convincing evidence of error.[44]

After noting that "The force of that presumption has found varying expression in this and other courts,"[45] ranging up to "beyond reasonable doubt,"[46] this Court stated that

> Even for the purpose of a controversy with strangers there is a presumption of validity, a presumption not to be overthrown except by clear and cogent evidence. The question is whether the respondent has sustained that heavy burden.[47]

---

[43] 293 U.S. at 7.

[44] 293 U.S. at 7.

[45] 293 U.S. at 7.

[46] 299 U.S. at 8, citing *Austin Machinery v. Buckeye Traction Ditcher*, 13 F.2d 697, 700 (6th Cir. 1926).

[47] 293 U.S. at 2.

Although this Court did not use the term "clear and convincing" in *Radio Corporation*, nor in the following opinions of this Court citing it,[48] lower courts have attached that evidentiary standard to this Court's opinion.[49]

Requiring evidence not considered by the Patent Office during the prosecution of the patent application or considered

---

[48] *Smith v. Hall*, 301 U.S. 216, 233 (1937); *Schriber-Schroth v. Cleveland Trust*, 305 U.S. 47, 59 (1938); *Williams Mfg. v. United Shoe Machinery*, 316 U.S. 364, 392 (1942) (concurring opinion); *Director, OWCP v. Greenwich Collieries*, 512 U.S. 267, 274 (1994).

[49] Perhaps the first opinion using the phrase "clear and convincing" for the evidentiary requirement following *Radio Corporation* is *Cleveland Trust v. Schriber-Schroth*, 92 F.2d 330 (6th Cir. 1937).

> Where, as in this case, substantially all pertinent prior art has been cited against the patent, where, in hard fought interferences, novelty and invention have been challenged, and where priority of conception has been finally adjudicated only upon repeated review in both administrative and judicial forums, the patent should not be stricken down except upon very clear and convincing proof of invalidity. The weight to be given this presumption has been so recently and so thoroughly discussed, and the rule stated in all the varying formulae by which courts have announced and affirmed it, in *Radio Corporation v. Radio Laboratories*, that it is unnecessary here to repeat or to cite additional cases.

92 F.2d at 335 (citations omitted).

For a discussion of how the "clear and convincing" requirement comes into being, see Lee Hollaar and John Knight, "Unclear and Unconvincing: How a misunderstanding led to the heightened evidentiary requirement in patent litigation," http://digital-law-online.info/papers/jk/unclear.htm.

previously in litigation goes far beyond the holding in *Radio Corporation*.

The Presumption Of Administrative Competence

The presumption of administrative correctness due the Patent Office requires heightened deference – clear and convincing evidence – to the fact-finding of the examiner, as stated in the prosecution history of the patent application. But that does not mean that the same deference is due when there has been no fact-finding on a matter by the examiner.

This Court, in *Dickenson v. Zurko*,[50] noted that the Administrative Procedures Act's scope of review provision[51] requires deference be given by the courts to the fact-finding of the Patent Office. But in discussing an anomaly noted by some *amici*, this Court noted:

> An applicant denied a patent can seek review either directly in the Federal Circuit, see 35 U.S.C. § 141, or indirectly by first obtaining direct review in federal district court, see § 145. The first path will now bring about Federal Circuit court/agency review; the second path might well lead to Federal Circuit court/court review, for the Circuit now reviews Federal District Court factfinding using a "clearly erroneous" standard. ...

---

[50] 527 U.S. 150 (1999).

[51] 5 U.S.C. § 706.

> We are not convinced, however, that the presence of the two paths creates a significant anomaly. The second path permits the disappointed applicant to present to the court evidence that the applicant did not present to the PTO. The presence of such new or different evidence makes a factfinder of the district judge. And nonexpert judicial factfinding calls for the court/court standard of review. We concede that an anomaly might exist insofar as the district judge does no more than review PTO factfinding, but nothing in this opinion prevents the Federal Circuit from adjusting related review standards where necessary.[52]

In other words, the findings of fact by the Patent Office are entitled to heightened deference on review, based on a presumption of administrative correctness.[53] But new evidence presented in the district court is not entitled to that deference. By analogy, one wishing to invalidate a patent should have to provide clear and convincing evidence where it is counter to the fact-finding of the patent examiner, but should only have

---

[52] 527 U.S. at 164. (citations omitted).

[53] When the Patent Office reviews its own work, such as during the reexamination of an issued patent, there is no presumption of administrative correctness. There is, however, a statutory requirement that "a substantial *new* question of patentability" be raised by the request for reexamination. (35 U.S.C. § 303, emphasis added.) This prevents a requester from simply questioning the examiner's finding and conclusions but imposes no special burden for considering prior art not duplicative of that already considered.

to bear the preponderance of evidence burden normal to civil litigation when new evidence not duplicative of what was considered by the patent examiner is presented.

As noted by the Federal Circuit:

> When an attacker, in sustaining the burden imposed by § 282, produces prior art or other evidence *not* considered in the PTO, there is, however, *no reason to defer* to the PTO so far as *its* effect on validity is concerned.[54]

Does It Make A Difference?

In *Zurko*, it was noted that it may be difficult to find a case where the difference in the standard of review of fact-finding made by the Patent Office makes a difference.[55] That does not seem to be the case with respect to patent litigation.

In its October 2003 report *To Promote Innovation: The Proper Balance of Competition and Patent Law and Policy*, the Federal Trade Commission noted the concern expressed by panelists regarding applying a clear and convincing evidence standard to prior art that the Patent Office never saw.

> Critics questioned whether that combination can be justified. Some noted the disparity between directing the PTO to issue

---

[54] *Amer. Hoist & Derrick v. Sowa*, 725 F.2d 1350, 1359 (Fed. Cir. 1984), emphasis in the original.

[55] See 527 U.S. at 162-163.

patents based on an assessment of a mere preponderance of the evidence and subjecting third parties who challenge those patents to a higher standard of proof. Others questioned whether there was a logical basis for extending the presumption or standard to challenges based on prior art that the PTO had never considered. Several of the panelists took a pragmatic perspective, questioning whether the limited examination possible in terms of hours available and ability to probe behind applicants' assertions justified the presumption or the high standard of proof.

Defenders of the presumption and standard urged that a finding of validity by a neutral government agency using a knowledgeable examiner justifies placing a heavy burden on challengers. Some observed that the Federal Circuit has recognized that the challenger's burden is partially discharged when new, material prior art is presented, and argued that any remaining advantages flowing from the presumption and high standard of proof have little, or only a measured, practical effect. Others, in contrast, asserted that the presumption and standard can have compelling effects on both judges and juries. District Judge Ellis worried that the clear and convincing evidence burden may work to

> undermine the role contemplated by the patent system for court challenges to weed out faulty patents.[56]

Commenting on the problem caused by the higher evidentiary standard, the FTC notes:

> To the extent that the clear and convincing evidence standard distorts the litigation process, as some of the panelists indicate, it is a matter for particular concern. Litigation is a mechanism for focusing enhanced attention on those patents that are most likely to hold commercial significance and for weeding out from this group those patents that should not have been granted. If these market-selected inquiries cannot be conducted on a level playing field, there is serious potential for judicially confirming unnecessary, potentially competition-threatening rights to exclude.[57]

Having Two Standards Of Evidence Should Not Substantially Complicate Patent Litigation

Having two standards for evidence presented to invalidate a patent in litigation should not substantially complicate that litigation (any more than patent litigation is already complicated).

---

[56] *FTC report*, Chapter 5, pp. 27-28 (footnote references omitted), available at http://www.ftc.gov/os/2003/10/innovationrpt.pdf.

[57] *FTC report*, Chapter 5, p. 28.

This Court's *Graham* test for obviousness indicates that one is not determining a single fact based on clear and convincing evidence, but a number of facts, each of which can have their own evidentiary burden, that form the basis of a conclusion of law regarding validity.

> Under § 103, [1] the scope and content of the prior art are to be determined; [2] differences between the prior art and the claims at issue are to be ascertained; and [3] the level of ordinary skill in the pertinent art resolved. Against this background, the obviousness or nonobviousness of the subject matter is determined.[58]

It is likely that, for example, "the scope and content of the prior art" is not a single fact, but a series of facts that describe what each of the prior art references describes. To the extent that fact-finding regarding a particular reference has been made by the Patent Office, it is entitled to deference by requiring clear and convincing evidence that the examiner was incorrect.

However, in many cases the examiner has not made any finding of "the level of ordinary skill in the pertinent art," at least not on the record of the patent examination. In that case, there is no administrative fact-finding to defer to, and the characterization of the person of ordinary skill will be based on the side providing the preponderance of the evidence. It would make little sense to say that the patent owner's characterization of the person of ordinary skill should be accepted unless the opposing side can prove their

---

[58] 383 U.S. at 17 (numbers added).

characterization with clear and convincing evidence, if the issue had not been considered by the examiner.

For each finding of fact, it will be necessary to determine whether evidence has been previously considered by the examiner.[59] If it has been, then the presumption of administrative correctness requires that evidence contrary to the fact-finding by the examiner must be "clear and convincing." On the other hand, if the evidence presented has not been considered by the examiner, or is not contrary to the fact-finding of the examiner,[60] no heightened deference is warranted and it must meet the "preponderance of the evidence" standard in civil litigation.

Based on all the findings of fact, each meeting its evidentiary threshold, patent invalidity for obviousness (or other reasons) can then be determined as a matter of law.

As discussed above, in *Zurko* this Court noted a situation where different weight is attached to the evidence depending on whether it is introduced in the Patent Office or in court in a suit seeking the issuance of a patent.[61]

---

[59] The evidence presented could either be a prior art reference considered by the examiner, or another prior art reference that is duplicative of the references considered by the examiner. For example, a paper in a scientific journal that duplicates the teaching in a patent considered by the examiner supplies no evidence not considered by the examiner.

[60] The examiner may have discussed only one portion of a reference during the examination of the patent application, making no fact-finding on other portions.

[61] 527 U.S. at 164.

The Federal Circuit hints that the "clear and convincing" evidentiary standard may not really apply for evidence not considered by the examiner.

> Indeed, new prior art not before the PTO may so clearly invalidate a patent that the burden is fully sustained merely by proving its existence and applying the proper law.[62]

In other words, while the burden is still "clear and convincing" evidence, with new prior art it may be easy to convince the court. It would be far better to say that the normal burden of proof in civil litigation – the preponderance of the evidence – also applies in patent litigation *except* for facts already determined by the Patent Office, where the presumption of administrative correctness dictates that clear and convincing evidence will be required.

Promotion Of Sound Policy Objectives

By correcting the lower courts' requirement that all evidence produced to show the invalidity of a patent must meet the heightened "clear and convincing" standard, this Court will also help promote the policy objectives behind a through patent examination.

Because prior art that has been the subject of fact-finding on the part of the examiner during the prosecution will carry a heightened evidentiary requirement for disputing that fact-finding, it will be to the advantage of a patent applicant to bring prior art to the attention of the examiner so that the

---

[62] *Amer. Hoist & Derrick v. Sowa*, 725 F.2d 1350, 1359-1360 (Fed. Cir. 1984).

examiner can make a determination that will be hard to rebut in later litigation. But since deference is due only to the fact-finding of the examiner regarding a particular reference, simply burying an examiner with boxes of prior art so that the examiner will note what was submitted on a prior art list will not be given any deference.

In litigation, a party challenging a patent will be encouraged to bring art not considered by the examiner to the court, because no deference will be given for prior art not considered by the examiner, rather than argue about the art that was considered because there will be a heightened evidentiary requirement for prior art that is merely cumulative of the fact-finding by the examiner.

And the owner of a questionable patent will be apprehensive in asserting that patent because there will no longer be the heightened evidentiary requirement for art not considered during the prosecution of the patent application. Whenever a patent is asserted, either in litigation or by a threatening letter, the patent owner is playing "you bet your patent," since if invalidating prior art is successfully proven, the patent claims at issue are declared invalid forevermore.[63] The requirement of showing new and invalidating prior art by "clear and convincing evidence" stacks the deck in favor of

---

[63] This is one of the reasons why patent reexamination may not be an option for an alleged infringer of a bad patent. Unlike litigation, where a patent claim is either invalidated or not, in reexamination the patent owner can revise the claim. (The scope of the patent cannot be enlarged, however. See 35 U.S.C. §§ 305 and 314.) This means that a patent owner may be able to narrow the claim so that the new prior art is avoided but it still encompasses the alleged infringing device or act.

the owner of a questionable patent, who will be more willing to assert it.

Even if the owner of the questionable patent is not foolish enough to file an infringement suit, sending a warning letter could be enough to trigger a declaratory judgment action to find the patent invalid, especially if the only requirement for success in such a suit is finding invalidating prior art, not overcoming the high requirement of "clear and convincing" evidence. A more level playing field may be enough to make most "patent trolls" think twice before threatening a company and putting their patents at risk.

Conclusion

Because of the important role in reducing impermissible hindsight in patent prosecution the Federal Circuit's requirement for showing a "suggestion, teaching, or motivation" should be affirmed by this Court as consistent with its *Graham* test for obviousness.

However, for the reasons given above, this Court should vacate the Federal Circuit's holding that KSR "must prove by clear and convincing evidence that each claim that is challenged cannot reasonably be held to be non-obvious."[64]

Respectfully submitted,

Professor Lee A. Hollaar
Amicus Curiae

by: David M. Bennion
Counsel of Record
Parsons Behle & Latimer
201 South Main Street, Suite 1800
Salt Lake City UT 84111
(801) 532-1234
Attorney for *Amicus Curiae*

---

[64] *Teleflex v. KSR*, 119 Fed. Appx. 282, 285 (Fed. Cir. 2005).

554 H

No. 04-1350

Supreme Court, U.S.
FILED
AUG 2 2 2006
OFFICE OF THE CLERK

IN THE

Supreme Court of the United States

KSR INTERNATIONAL CO.,

Petitioner,

v.

TELEFLEX INC. and
TECHNOLOGY HOLDING CO.,

Respondents.

On Writ Of Certiorari
To The United States Court Of Appeals
For The Federal Circuit

BRIEF OF INTEL CORPORATION AND MICRON TECHNOLOGY, INC. AS *AMICI CURIAE* IN SUPPORT OF PETITIONER

TINA M. CHAPPELL
INTEL CORPORATION
M/S: OC2-157
4500 South Dobson Road
Chandler, AZ 85248
(480) 715-5338

THEODORE B. OLSON
Counsel of Record
MATTHEW D. MCGILL
AMIR C. TAYRANI
GIBSON, DUNN & CRUTCHER LLP
1050 Connecticut Avenue, N.W.
Washington, D.C. 20036
(202) 955-8500

Counsel for Amici Curiae

QUESTION PRESENTED

Whether the Federal Circuit has erred in holding that a claimed invention cannot be held "obvious," and thus unpatentable under 35 U.S.C. § 103(a), in the absence of some proven "'teaching, suggestion, or motivation,' that would have led a person of ordinary skill in the art to combine the relevant prior art teachings in the manner claimed."

TABLE OF CONTENTS

Page

QUESTION PRESENTED i

TABLE OF AUTHORITIES iii

INTEREST OF *AMICI CURIAE* 1

STATEMENT 2

SUMMARY OF ARGUMENT 4

ARGUMENT 6

I. The "Teaching, Suggestion, Or Motivation" Test Stifles Innovation And Unduly Rewards Routine Technological Advances 6

II. The "Teaching, Suggestion, Or Motivation" Test Conflicts With This Court's Well-Settled Precedent 15

CONCLUSION 20

TABLE OF AUTHORITIES

Page(s)

CASES

Anderson's-Black Rock, Inc. v. Pavement Salvage Co., 396 U.S. 57 (1969) 18

Aronson v. Quick Point Pencil Co., 440 U.S. 257 (1979) 14

Atl. Works v. Brady, 107 U.S. 192 (1883) 6, 15

Bonito Boats, Inc. v. Thunder Craft Boats, Inc., 489 U.S. 141 (1989) 3

Cryovac Inc. v. Pechiney Plastic Packaging, Inc., 430 F. Supp. 2d 346 (D. Del. 2006) 13

Dunbar v. Myers, 94 U.S. 187 (1876) 15, 16

Ex parte Prior, No. 2005-1405 (Bd. of Patent App. & Interferences 2005) 9

Gardner v. Herz, 118 U.S. 180 (1886) 7

Graham v. John Deere Co., 383 U.S. 1 (1966) ..... *passim*

Great Atl. & Pac. Tea Co. v. Supermarket Equip. Corp., 340 U.S. 147 (1950) 17

Heald v. Rice, 104 U.S. 737 (1882) 17

Hotchkiss v. Greenwood, 52 U.S. (11 How.) 248 (1851) 3, 15, 16

IMX, Inc. v. Lendingtree, LLC, 405 F. Supp. 2d 479 (D. Del. 2005) 13

In re Dembiczak, 175 F.3d 994 (Fed. Cir. 1999) 8

In re Johnston, 435 F.3d 1381 (Fed. Cir. 2006) 13

In re Lee, 277 F.3d 1338 (Fed. Cir. 2002) 8

In re Rouffet, 149 F.3d 1350 (Fed. Cir. 1998) 4

Knoll Pharm. Co. v. Teva Pharm. USA, Inc.,
367 F.3d 1381 (Fed. Cir. 2004) 14

McGinley v. Franklin Sports, Inc.,
262 F.3d 1339 (Fed. Cir. 2001) 9

Packing Co. Cases, 105 U.S. 566 (1882) 16

Reckendorfer v. Faber, 92 U.S. 347 (1876) 17

Rockwell Int'l Corp. v. United States,
147 F.3d 1358 (Fed. Cir. 1998) 14

Ruiz v. A.B. Chance Co.,
357 F.3d 1270 (Fed. Cir. 2004) 19

Sakraida v. AG Pro, Inc., 425 U.S. 273 (1976) 18

S3 Inc. v. nVIDIA Corp.,
259 F.3d 1364 (Fed. Cir. 2001) 12

Toro Co. v. Scag Power Equip., Inc.,
241 F. Supp. 2d 1057 (D. Neb. 2003) 13

Transocean Offshore Deepwater Drilling, Inc. v. GlobalSantaFe Corp., No. H-03-2910,
2006 U.S. Dist. LEXIS 54727
(S.D. Tex. Aug. 7, 2006) 13

Winner Int'l Royalty Corp. v. Wang,
202 F.3d 1340 (Fed. Cir. 2000) 9

STATUTES

35 U.S.C. § 101 2

35 U.S.C. § 103 ..... *passim*

CONSTITUTIONAL PROVISIONS

U.S. Const. art. I, § 8 ..... 6, 9

OTHER AUTHORITIES

John R. Allison & Mark A. Lemley, *The Growing Complexity of the United States Patent System*, 82 B.U. L. Rev. 77 (2002) 10

Rebecca S. Eisenberg, *Obvious to Whom? Evaluating Inventions from the Perspective of PHOSITA*, 19 Berkeley Tech. L.J. 885 (2004) 12

Kimberly A. Moore, *Judges, Juries, and Patent Cases—An Empirical Peek Inside the Black Box*, 99 Mich. L. Rev. 365 (2000) 10

BRIEF OF INTEL CORPORATION AND MICRON TECHNOLOGY, INC. AS *AMICI CURIAE* IN SUPPORT OF PETITIONER

INTEREST OF *AMICI CURIAE*[1]

The question presented in this case is whether the Federal Circuit's "teaching, suggestion, or motivation" test for evaluating the patentability of claimed subject matter can be reconciled with this Court's precedent, the plain language of 35 U.S.C. § 103, and the Constitution's Patent Clause. Intel Corporation and Micron Technology, Inc.—innovative high-technology companies that together hold thousands of patents and annually devote billions of dollars to research-and-development programs—have a significant interest in the correct resolution of this question.

Intel is the world's largest semiconductor manufacturer and is also a leading manufacturer of computer, networking, and communications products. Intel is one of the ten most prolific producers of technology patents in the United States.

Micron is one of the world's leading semiconductor manufacturers. It produces an array of memory storage devices and image sensors, and its products can be found in everything from personal computers to digital cameras and network servers.

Intel and Micron rely upon the United States patent laws to protect their intellectual property and believe that a strong

---

[1] Pursuant to this Court's Rule 37.3(a), letters of consent from all parties to the filing of this brief have been submitted to the Clerk. Pursuant to this Court's Rule 37.6, *amici* state that this brief was not authored in whole or in part by counsel for any party, and that no person or entity other than *amici* or their counsel made a monetary contribution to the preparation or submission of this brief.

patent system is essential to the vitality of the country's knowledge-based economy. As patent holders and frequent patent litigants, Intel and Micron have a strong interest in preserving the overall quality of United States patents. Intel and Micron are deeply concerned that the Federal Circuit's judicially manufactured obviousness standard, which requires the identification of a specific "teaching, suggestion, or motivation" to combine prior art references, has facilitated the proliferation of patents claiming nothing more than the straightforward combination of references already well-known in the relevant art. Affording patent protection to such simple combinations substantially dilutes overall patent quality.

Moreover, because Intel and Micron litigate patent infringement suits as both plaintiffs and defendants, they have a significant interest in ensuring that the patent laws are applied in an evenhanded manner that strikes a reasonable balance between intellectual property rights, innovation, and competition. Through the "teaching, suggestion, or motivation" test, however, the Federal Circuit has skewed litigation in favor of patent holders by unilaterally imposing nearly insurmountable legal burdens on defendants seeking to establish the obviousness of a patent. Intel and Micron are also concerned that the "teaching, suggestion, or motivation" test poses a serious obstacle to technological innovation. From their experiences, Intel and Micron have developed valuable insight into the practical repercussions of the Federal Circuit's obviousness jurisprudence and a keen awareness of the pressing need for this Court to reject the "teaching, suggestion, or motivation" test in favor of the obviousness standard endorsed in *Graham v. John Deere Co.*, 383 U.S. 1 (1966).

STATEMENT

1. The patent laws impose three threshold conditions on patentability: novelty, utility, and non-obviousness. 35 U.S.C. § 101; *id.* § 103. While the novelty requirement inquires whether the invention was previously known and the

utility requirement ensures that society derives a benefit from the invention, the requirement of non-obviousness distinguishes between routine improvements within easy reach of a person knowledgeable in the relevant field and those significant technological advances that truly "add to the sum of useful knowledge." *Graham v. John Deere Co.*, 383 U.S. 1, 6 (1966).

The non-obviousness requirement has deep roots in this Court's jurisprudence, *see Hotchkiss v. Greenwood*, 52 U.S. (11 How.) 248 (1851), and, in 1952, that jurisprudence was codified as 35 U.S.C. § 103. That provision provides:

> A patent may not be obtained . . . if the differences between the subject matter sought to be patented and the prior art are such that the subject matter as a whole would have been obvious at the time the invention was made to a person having ordinary skill in the art to which said subject matter pertains.

35 U.S.C. § 103(a). By focusing upon the knowledge of a person skilled in the relevant field, Section 103 ensures that patents are granted only to reward innovative developments not reasonably apparent to someone trained in the art and that the patent laws are not used "to remove existent knowledge from the public domain, or to restrict free access to materials already available." *Graham*, 383 U.S. at 6; *see also Bonito Boats, Inc. v. Thunder Craft Boats, Inc.*, 489 U.S. 141, 150 (1989) ("The nonobviousness requirement extends the field of unpatentable material beyond that which is known to the public under § 102, to include that which could readily be deduced from publicly available material by a person of ordinary skill in the pertinent field of endeavor.").

2. Notwithstanding the plain language of Section 103, the Federal Circuit—in a self-described effort to guard against the "subtle but powerful attraction of a hindsight-based obviousness analysis" (Pet. App. 6a-7a (internal quota-

tion marks omitted))—has engrafted onto the statutory text an additional prerequisite to reaching a legal conclusion of obviousness. According to the Federal Circuit, an invention that combines two or more prior art references can be deemed obvious only where a court has "ma[d]e specific findings showing a teaching, suggestion, or motivation to combine prior art teachings in the particular manner claimed by the patent at issue." Pet. App. 16a. This so-called "teaching, suggestion, or motivation" requirement significantly diminishes the likelihood that a patent claiming a simple combination of prior art references will be deemed obvious. The Federal Circuit will not hold a patent that "combines two known elements" to be obvious unless the patent examiner or party challenging the patent's validity is able to point to a *specific* feature of "the prior art as a whole to suggest the desirability, and thus the obviousness, of making the combination." *In re Rouffet*, 149 F.3d 1350, 1356 (Fed. Cir. 1998) (internal quotation marks omitted).

The Federal Circuit's unilateral imposition of the "teaching, suggestion, or motivation" standard effectively overrides the statutory language of Section 103, which requires obviousness to be examined from the perspective of a person possessing ordinary skill in the relevant art, and has facilitated the issuance of countless patents claiming nothing more than a simple combination of preexisting elements that properly belongs in the public domain. This Court should explicitly reject the Federal Circuit's test in favor of the statutorily grounded obviousness framework set forth in *Graham*.

SUMMARY OF ARGUMENT

To secure the Patent Clause's objective of promoting innovation, patents must be restricted to those claims that truly advance the body of relevant knowledge. Claims encompassing simple combinations of the prior art that would have been apparent to anyone trained in the relevant field do not reflect innovation and do not warrant patent protection. The obvi-

ousness standard—codified at 35 U.S.C. § 103—polices this distinction between patentable inventions and the unpatentable byproducts of routine technological progress. This distinction has largely collapsed, however, under the weight of the Federal Circuit's "teaching, suggestion, or motivation" test, which restricts obviousness findings to those cases in which there is a specific prior art reference highlighting the desirability of combining elements already known in the art. This standard has produced a glut of patents claiming seemingly obvious combinations of prior art, and it squarely conflicts with the Patent Clause's implicit patentability requirements, this Court's obviousness jurisprudence, and the plain language of Section 103.

Far from promoting innovation, the Federal Circuit's "teaching, suggestion, or motivation" test has impeded technological development by removing prior art combinations from the public domain. As a result, companies often must divert a portion of their research-and-development funds to obtaining licenses for the use of technological combinations that should be freely available to all. Where a company inadvertently trips over one of these countless combination patents during its research, it faces the unwelcome prospect of settling an infringement claim based on a legally dubious patent or challenging the patent's validity in court under the auspices of the exacting "teaching, suggestion, or motivation" test. That judicially crafted standard significantly skews litigation in favor of patent holders by restricting the application of the obviousness doctrine to those patents claiming combinations specifically taught or suggested in the prior art. Moreover, under the Federal Circuit's test, the outcome of the obviousness inquiry—which, properly conceived, is ultimately a question of law—is controlled by disputed factual issues about the implications of prior art teachings and the subjective motivations of persons skilled in the relevant art. The predominance of factual issues makes it nearly impossible for a party challenging a patent's validity to establish ob-

viousness at the summary judgment stage. Thus, even where a defendant in an infringement action is able to demonstrate obviousness to a court's satisfaction, it almost invariably must incur the substantial costs of a trial to do so.

Innovation would be far better served by an obviousness standard that placed meaningful restrictions on patentability by excluding combinations that are apparent to a person with ordinary skill in the relevant art—without regard to whether a specific "teaching, suggestion, or motivation" to combine prior art teachings in the particular manner claimed is identified in one of the prior art references. Indeed, in *Graham v. John Deere Co.*, 383 U.S. 1, 17 (1966), this Court explicitly instructed the lower courts to utilize an obviousness standard that focuses upon the level of ordinary skill in the art and the differences between the prior art and the claimed invention. The Court should reaffirm the *Graham* framework, which strikes the appropriate balance between intellectual property rights and innovation, and reject the Federal Circuit's legally insupportable "teaching, suggestion, or motivation" test.

ARGUMENT

I. The "Teaching, Suggestion, Or Motivation" Test Stifles Innovation And Unduly Rewards Routine Technological Advances.

Consistent with the Patent Clause's objective of "promot[ing] the Progress of Science and useful Arts," U.S. Const. art. I, § 8, Congress developed a patent system that fosters innovation by temporarily granting inventors exclusionary rights for novel, useful, and non-obvious works. *See Atl. Works v. Brady*, 107 U.S. 192, 200 (1883) ("The design of the patent laws is to reward those who make some substantial discovery or invention, which adds to our knowledge and makes a step in advance in the useful arts."). Because monopoly-like rights have been viewed with disfavor throughout the Nation's history (*Graham*, 383 U.S. at 7), however, neither the Constitution nor the patent laws countenances the

issuance of patents that do not promote innovation or that otherwise impede technological progress. As this Court has explained, "[i]nnovation, advancement, and things which add to the sum of useful knowledge are inherent requisites in [the] patent system." *Id.* at 6; *see also Gardner v. Herz*, 118 U.S. 180, 191 (1886) ("under art. I, sec. 8, subdivision 8 of the Constitution, a patentee must be an inventor and he must have made a discovery" (internal quotation marks omitted)).

The Federal Circuit's judicially manufactured "teaching, suggestion, or motivation" test conflicts with the patentability conditions implicit in the Patent Clause. *See Graham*, 383 U.S. at 6 ("patent validity requires reference to a standard written into the Constitution" (internal quotation marks omitted)). By sustaining patents that claim simple combinations apparent to anyone reasonably skilled in the relevant art, the Federal Circuit has impeded innovation and weakened competition to the detriment of the U.S. economy and American consumers. The deleterious consequences of the Federal Circuit's obviousness jurisprudence are inimical to the objectives of the Patent Clause and demonstrate the legal infirmity of the "teaching, suggestion, or motivation" test. Indeed, the serious practical ramifications of utilizing that obviousness standard are evident at every stage of the patent process: at the Patent and Trademark Office, where the "teaching, suggestion, or motivation" test imposes legal obstacles that preclude examiners from rejecting seemingly trivial claims, given the available art and resources; at the pre-litigation stage, where companies often choose to settle threatened infringement actions rather than attempt to demonstrate obviousness under the Federal Circuit's onerous standard; during trials, where the fact-intensive nature of the "teaching, suggestion, or motivation" test makes it nearly impossible for a district court to grant summary judgment on obviousness grounds; and before the Federal Circuit, which regularly upholds the validity of patents claiming simple combinations of prior art reflecting little or no innovation.

1. Under the Federal Circuit's "teaching, suggestion, or motivation" standard, neither the knowledge inherently possessed by a person with ordinary skill in the relevant art nor "common sense" standing alone is a sufficient ground upon which to rest an obviousness determination. *See In re Lee*, 277 F.3d 1338, 1344 (Fed. Cir. 2002). To justify the conclusion that a particular combination was obvious in the prior art, a patent examiner or party challenging a patent's validity must point to a *specific* prior art reference teaching the particular combination in question. Pet. App. 12a. This exacting and rigid legal standard has resulted in a proliferation of patents that claim simple combinations of prior art references.

Some of the more stark examples include:

- An orange trash bag decorated with lines and facial features that cause the bag, when filled with leaves, to resemble a jack-o'-lantern. Although children's art designs for giving brown paper bags the appearance of a jack-o'-lantern were already well-known, the Federal Circuit concluded that the trash bag was patentable because the Board of Patent Appeals and Interferences had not "particularly identif[ied] any suggestion, teaching, or motivation to combine the children's art references . . . with the conventional trash or lawn bag references." *In re Dembiczak*, 175 F.3d 994, 1000 (Fed. Cir. 1999).

- An automobile antitheft device that is mounted across the steering wheel and locked in place using a self-locking ratcheting mechanism. Although both the design of the antitheft device and the self-locking mechanism were known in the prior art, the Federal Circuit held that the invention was not obvious because it had not been established under the "teaching, suggestion, or

motivation" test that "one of ordinary skill would [have been] motivated to combine" the two prior art references. *Winner Int'l Royalty Corp. v. Wang*, 202 F.3d 1340, 1350 (Fed. Cir. 2000).

- A baseball with specific "finger placement indicia" to teach students how to grasp the ball when throwing different pitches. Although a baseball that bore a "striking" resemblance to the invention had been patented thirty years earlier and another training device that used similar "finger placement indicia" was also well-known in the art, the Federal Circuit concluded that the invention was non-obvious because a motivation to combine the two pre-existing patents had not been established. *McGinley v. Franklin Sports, Inc.*, 262 F.3d 1339, 1345, 1356 (Fed. Cir. 2001).[2]

Affording patent protection to such simple combinations cannot be said to "promote the Progress of Science and useful Arts." U.S. Const. art. I, § 8. Such patents instead provide an unwarranted windfall to claimants who have done little to enhance the available body of useful knowledge. *Graham*, 383 U.S. at 6. Through imposition of its exacting "teaching, suggestion, or motivation" test, the Federal Circuit has effectively blurred the line between the novelty and non-

---

[2] There is also a rich supply of similarly questionable patents that have never been litigated in federal court but that were approved by the Patent and Trademark Office under the Federal Circuit's "teaching, suggestion, or motivation" test. *See, e.g.*, *Ex parte Prior*, No. 2005-1405 (Bd. of Patent App. & Interferences 2005) (rejecting a patent examiner's conclusion that a patent claiming a method for using plaster to fill a hole in a wall was obvious because the examiner had not identified a specific suggestion to combine the relevant prior art references).

obviousness requirements: Courts are required to uphold a patent as long as it embodies an idea not precisely taught by the prior art—no matter how trivial or obvious the patent and no matter how insubstantially it advances the existing state of knowledge.

The "teaching, suggestion, or motivation" test—with its narrow focus on prior art teachings—is simply too rigid to constitute an effective means of identifying obvious patent claims. Patent examiners have only limited resources to devote to searching for prior art references teaching the combination in question, and their efforts to distinguish patentable and unpatentable claims are further hampered by the Federal Circuit's refusal to countenance reliance upon the inherent knowledge of a person skilled in the relevant art or the use of simple common sense in making obviousness determinations.[3] The inevitable consequence of the methodological restrictions imposed by the Federal Circuit is that the Patent and Trademark Office all too often approves patents that are obvious on their face. The validity of these patents is generally upheld during litigation because lay judges and juries are reluctant to second-guess the patent examiner's perceived expertise. *See* Kimberly A. Moore, *Judges, Juries, and Patent Cases—An Empirical Peek Inside the Black Box*, 99 Mich. L. Rev. 365, 392 (2000) ("if the case makes it to trial . . . , the patentee holds a significant advantage in challenges to the patent").

---

[3] On average, patent examiners spend only eighteen hours ensuring that a claimed invention satisfies the numerous prerequisites to patentability, including the detailed regulatory requirements of Title 37 of the Code of Federal Regulations, and the statutory novelty, utility, and non-obviousness requirements. *See* John R. Allison & Mark A. Lemley, *The Growing Complexity of the United States Patent System*, 82 B.U. L. Rev. 77, 135 (2002).

Moreover, the Federal Circuit's desire to prevent hindsight-based obviousness determinations (Pet. App. 6a-7a) is a wholly inadequate justification for use of the "teaching, suggestion, or motivation" test. As an initial matter, it is far from clear that judges, especially Federal Circuit judges experienced in patent matters, would succumb so easily to the lure of hindsight. In the absence of a well-documented pattern of courts invalidating patents possessing strong indicia of non-obviousness, it must be presumed that judges will be able to exclude hindsight from their obviousness inquiries. In any event, even if the use of hindsight were a known flaw in courts' obviousness determinations, the significant costs associated with the "teaching, suggestion, or motivation" test—most notably, the proliferation of patents claiming simple combinations of the prior art—vastly outweigh any benefits generated by the Federal Circuit's test.

2. By granting exclusive rights to ideas that should be at the disposal of all members of the public engaged in innovative efforts, patents on obvious combinations substantially impede technological development.

The flood of legally doubtful combination patents generated by the "teaching, suggestion, or motivation" test constitutes a significant obstacle to developing innovative technologies. For example, companies may have to pay a licensing fee for the right to use a patented combination, even where the combination—though deemed non-obvious under the Federal Circuit's "teaching, suggestion, or motivation" test—would have been obvious to anyone possessing ordinary skill in the relevant field. These licensing fees inevitably increase research costs and result in higher prices for consumers.

Moreover, the difficulty of establishing obviousness under the Federal Circuit's "teaching, suggestion, or motivation" test affords companies an incentive to redirect their research efforts away from truly novel projects toward com-

paratively straightforward combinations of existing technology. *See* Rebecca S. Eisenberg, *Obvious to Whom? Evaluating Inventions from the Perspective of PHOSITA*, 19 Berkeley Tech. L.J. 885, 890 (2004) ("The Federal Circuit has deployed judicial review in ways that make it harder to establish nonobviousness .... In the process, it has ... permitted the issuance of patents on routine advances within easy reach of technological practitioners of ordinary skill."). Due to the vast number of patents approved by the Patent and Trademark Office under the auspices of the Federal Circuit's "teaching, suggestion, or motivation" test, innovative research companies occasionally—and inadvertently—trip over one or more of these ubiquitous combination patents. The company is then faced with the Hobson's choice of settling the inevitable infringement action by paying a licensing fee for a patent that does nothing more than remove existing knowledge from the public domain, or attempting to vindicate its rights in court, where its efforts to demonstrate the patent's invalidity will be significantly hampered by the Federal Circuit's requirement that it identify a *specific* element of the prior art that taught the combination in question.

This is a particularly difficult standard to meet in the high-technology fields. The semiconductor and software industries do not have an extensive publication tradition, and when researchers do publish, they are unlikely to discuss obvious developments, such as the combination of two preexisting elements, instead focusing on more significant technological developments. *See* Eisenberg, *supra*, at 897-98 ("The gap between the skill of ordinary practitioners and the written record of prior art is likely to be particularly significant in industrial technology, with its prevailing culture of secrecy and few incentives to publish."). The search for prior art teachings is further impeded by the fact that obvious information need not be included in a patent's written description, which diminishes the likelihood that existing patents will specifically suggest an obvious combination. *See S3 Inc. v.*

nVIDIA Corp., 259 F.3d 1364, 1371 (Fed. Cir. 2001) ("The law is clear that patent documents need not include subject matter that is known in the field of the invention and is in the prior art, for patents are written for persons experienced in the field of the invention.").

Even if an innovative company could be confident that it will eventually satisfy the exacting "teaching, suggestion, or motivation" test, it almost invariably must endure the risk and expense of a trial to do so. Although a factual inquiry into the knowledge of persons skilled in the relevant art is a proper step in determining whether a patent is obvious, the obviousness inquiry is ultimately a question of law. *See Graham*, 383 U.S. at 17. Under the Federal Circuit's standard, however, fact-intensive issues predominate—including inquiries into the subjective motivations of persons skilled in the art and the implications that could be gleaned from prior art teachings—which makes it nearly impossible for a district court to grant summary judgment on obviousness grounds.[4] Indeed, as even the Federal Circuit has acknowledged, it is extremely rare for an infringement defendant to be able to identify a prior art reference that specifically and unambiguously teaches the pertinent combination. *See In re Johnston*, 435 F.3d 1381, 1385 (Fed. Cir. 2006) ("An explicit teaching that identifies and selects elements from different sources and states that they should be combined in the same way as in the invention at issue, is rarely found in the prior art."). Accordingly, it is virtually inevitable that there will be disputed factual issues requiring a trial and an ensuing "battle of the experts" regarding the state of the prior art and the motivations

---

[4] *See, e.g., Transocean Offshore Deepwater Drilling, Inc. v. GlobalSantaFe Corp.*, No. H-03-2910, 2006 U.S. Dist. LEXIS 54727 (S.D. Tex. Aug. 7, 2006); *Cryovac Inc. v. Pechiney Plastic Packaging, Inc.*, 430 F. Supp. 2d 346 (D. Del. 2006); *IMX, Inc. v. Lendingtree, LLC*, 405 F. Supp. 2d 479 (D. Del. 2005); *Toro Co. v. Scag Power Equip., Inc.*, 241 F. Supp. 2d 1057 (D. Neb. 2003).

of persons skilled in the relevant field—a fact illustrated by the decision below, where the Federal Circuit reversed the district court's grant of summary judgment to KSR and remanded the case for further consideration of the obviousness question. Pet. App. 16a; *see also Knoll Pharm. Co. v. Teva Pharm. USA, Inc.*, 367 F.3d 1381, 1385 (Fed. Cir. 2004) (reversing a grant of summary judgment because there were disputed issues of fact regarding obviousness); *Rockwell Int'l Corp. v. United States*, 147 F.3d 1358, 1366 (Fed. Cir. 1998) (same).

For Intel, Micron, and their peer companies, the nearly insurmountable difficulty of obtaining summary judgment on obviousness grounds increases the pressure to settle, even where the patent at issue is seemingly obvious on its face. Ultimately, whatever course Intel and Micron choose—settlement or litigation—they are required to divert funds that could have otherwise financed research efforts to respond to the infringement claim of a company holding a legally doubtful patent. Under the patentability standard implicit in the Patent Clause, however, such prior art combinations should be freely available for use by all members of the public, unless they represent a substantial contribution to the relevant field of knowledge. *See Aronson v. Quick Point Pencil Co.*, 440 U.S. 257, 262 (1979) ("the stringent requirements for patent protection seek to assure that ideas in the public domain remain there for the free use of the public").

These experiences are by no means unique to Intel, Micron, and other high-technology firms. This Court long ago recognized the pernicious effects occasioned by indiscriminately issuing patents for obvious claims. "It was never the object of [the patent] laws," this Court explained when invalidating a patent that claimed an inconsequential improvement of the prior art, "to grant a monopoly for every trifling device, every shadow of a shade of an idea, which would naturally and spontaneously occur to any skilled mechanic or operator in the ordinary progress of manufactures. Such an

indiscriminate creation of exclusive privileges," the Court continued, "tends rather to obstruct than to stimulate invention . . . [by] embarrass[ing] the honest pursuit of business with fears and apprehensions of . . . unknown liabilities to lawsuits and vexatious accountings for profits made in good faith." *Atl. Works*, 107 U.S. at 200.

To ensure that patents truly foster innovation—as the Constitution mandates that they do—this Court should reject the Federal Circuit's "teaching, suggestion, or motivation" test, which rewards routine discoveries at the expense of true innovation. As discussed below, the appropriate obviousness standard is clearly set forth in *Graham* and the plain language of 35 U.S.C. § 103.

II. The "Teaching, Suggestion, Or Motivation" Test Conflicts With This Court's Well-Settled Precedent.

The "teaching, suggestion, or motivation" test finds no license in this Court's obviousness jurisprudence or the statutory language of 35 U.S.C. § 103. This Court should reorient the obviousness inquiry to require an objective comparison between the purported invention, on the one hand, and the state of the prior art and the knowledge of an ordinary person skilled in the art, on the other. That standard is firmly entrenched in this Court's precedent and embodied in the text and history of Section 103.

1. Long before the requirement of non-obviousness was codified in 1952, this Court recognized the need to distinguish between patentable inventions that represent a substantial advancement of the prior art and unpatentable developments "destitute of ingenuity or invention." *Hotchkiss*, 52 U.S. (11 How.) at 266.[5] In *Hotchkiss*, for example—the case

---

[5] *See also Dunbar v. Myers*, 94 U.S. 187, 197 (1876) ("Invention or discovery is the requirement which constitutes the foundation of

that gave rise to the obviousness doctrine (*see Graham*, 383 U.S. at 3-4)—this Court held that a device for producing doorknobs was not patentable because the invention merely substituted clay or porcelain for metal or wood as the material for fabricating the doorknobs. *Hotchkiss*, 52 U.S. (11 How.) at 265. The Court explained that, "unless more ingenuity and skill . . . were required" to develop the invention "than were possessed by an ordinary mechanic acquainted with the business, there was an absence of that degree of skill and ingenuity which constitute essential elements of every invention." *Id.* at 267.

This distinction—between patentable inventions evidencing ingenuity and innovation, and unpatentable advances reflecting routine knowledge of the relevant art—was consistently recognized in this Court's decisions preceding the codification of the obviousness standard. *See, e.g., Dunbar*, 94 U.S. at 195 (holding that a patent for a saw with a deflecting plate attached to both sides was invalid because a saw with the deflecting plate on one side had already been patented, and explaining that any "[o]rdinary mechanic[] . . . would know how to arrange a deflecting plate at one side of a circular saw which had such a device properly arranged on the other side"); *Packing Co. Cases*, 105 U.S. at 572 (holding that a change in the process for cooking meats for purposes of preservation and packing was not patentable because the idea "would naturally occur to any one engaged in the business of packing such food").

[Footnote continued from previous page]

the right to obtain a patent."); *Packing Co. Cases*, 105 U.S. 566, 571-72 (1882) ("All improvement is not invention, and entitled to protection as such. Thus to entitle it, it ought to be the product of some exercise of the inventive faculties, and it must involve something more than what is obvious to persons skilled in the art." (internal quotation marks omitted)).

When applying the *Hotchkiss* obviousness standard, the Court reserved especially exacting scrutiny for patents that claimed a combination of two prior art references, explaining that "[c]ourts should scrutinize combination patent claims with a care proportioned to the difficulty and improbability of finding invention in an assembly of old elements." *Great Atl. & Pac. Tea Co. v. Supermarket Equip. Corp.*, 340 U.S. 147, 152 (1950). In *Reckendorfer v. Faber*, 92 U.S. 347 (1876), for example, the Court held that a combination of a pencil and eraser was unpatentable because "[e]ach . . . continues to perform its own duty, and nothing else. No effect is produced, no result follows, from the joint use of the two." *Id.* at 356. The Court explained that the combination was "the result of mechanical skill merely," which is not patentable. *Id.*; *see also id.* ("Mechanical skill is one thing; invention is a different thing."); *see also Heald v. Rice*, 104 U.S. 737, 755 (1882) (where "no inventive resource [is] drawn upon to bring . . . together" the components of a new device, the combination is not patentable).[6]

In none of these cases did the Court inquire whether there was a specific "teaching, suggestion, or motivation" to combine the prior art elements. The Court instead consistently adhered to the rule that a technological development was unpatentable if it would have been obvious to a person possessing ordinary skill in the relevant art. Congress codified this obviousness standard as 35 U.S.C. § 103. *See Gra-*

---

[6] Indeed, it is likely that a number of this Court's obviousness decisions would have come out differently under the "teaching, suggestion, or motivation" test. There is no indication in the Court's *Reckendorfer* opinion, for example, that a prior art reference existed teaching or suggesting the combination of a pencil or eraser. Due to the absence of such a prior art reference, the patents at issue could have been deemed non-obvious under the Federal Circuit's standard, notwithstanding the stark obviousness of combining a pencil and eraser.

ham, 383 U.S. at 17 (Section 103 "was intended merely as a codification of judicial precedents embracing the *Hotchkiss* condition, with congressional directions that inquiries into the obviousness of the subject matter sought to be patented are a prerequisite to patentability").

2. The framework for obviousness determinations under Section 103 builds upon *Hotchkiss* and its progeny. In *Graham*, this Court directed lower courts to undertake a statutory obviousness inquiry that considers the content of the prior art, the differences between the prior art and the claimed invention, and the knowledge of a person with ordinary skill in the relevant art. 383 U.S. at 17.[7] The existence of a specific "teaching, suggestion, or motivation" to combine prior art references has no place in *Graham*'s obviousness framework.

In *Graham* itself, the Court held that a device designed to absorb shock from plow shanks was obvious because "a person having ordinary skill in the prior art . . . would [have] immediately see[n]" the technological advance claimed by the applicant. 383 U.S. at 25. Similarly, in *Anderson's-Black Rock, Inc. v. Pavement Salvage Co.*, 396 U.S. 57 (1969), the Court held that a patent for an asphalt-paving device was invalid because it was merely a combination of previously known elements that would have been obvious to someone skilled in the relevant art. *Id.* at 62; *see also Sakraida v. AG Pro, Inc.*, 425 U.S. 273, 282 (1976) (holding that a system for flushing manure from barns was not patentable because it "add[ed] nothing to the sum of useful knowledge . . . [and] would [have] be[en] obvious to any person skilled in the art" (internal quotation marks and alteration omitted)). The pres-

---

[7] Certain "secondary considerations"—including commercial success, long felt but unresolved needs, and the failure of others in the field—may also be relevant to the obviousness inquiry. *Graham*, 383 U.S. at 17.

ence or absence of specific teachings, suggestions, or motivations was irrelevant to the Court's conclusion in these cases.

The Federal Circuit has strayed far from these jurisprudential moorings by shifting the focus of the obviousness inquiry away from the knowledge possessed by a person with ordinary skill in the relevant field and instead requiring "some suggestion, teaching, or motivation that would have led a person of ordinary skill in the art to combine the relevant prior art teachings in the manner claimed." Pet. App. 6a. This standard conflicts with more than a century of this Court's decisions, which have consistently evaluated the obviousness of a claimed invention from the perspective of a person skilled in the relevant art.[8]

In light of the profoundly adverse effect of the "teaching, suggestion, or motivation" test upon the United States patent system, this Court should reaffirm *Graham* and reiterate that the obviousness of a patent is to be determined through an evaluation of the knowledge of someone with ordinary skill in the relevant art and a consideration of the differences between the prior art and the claimed invention. 383 U.S. at 17. This standard is consistent with the Patent Clause's implicit patentability restrictions, this Court's precedent, and the plain language of Section 103.

---

[8] The fact that the requisite "teaching, suggestion, or motivation" may be implicit in the prior art, and thus need not be expressly stated, does not save the Federal Circuit's standard from infirmity. *See, e.g., Ruiz v. A.B. Chance Co.*, 357 F.3d 1270, 1277 (Fed. Cir. 2004). Any requirement that a party challenging the validity of a patent on obviousness grounds demonstrate a teaching, suggestion, or motivation—express or implied—is inconsistent with this Court's decisions evaluating obviousness based upon the knowledge of a person possessing ordinary skill in the relevant art, rather than upon the implicit teachings of the prior art or the subjective motivations of persons practicing that art. *See, e.g., Graham*, 383 U.S. at 25.

CONCLUSION

For the foregoing reasons, the judgment of the court of appeals should be reversed.

Respectfully submitted.

TINA M. CHAPPELL
INTEL CORPORATION
M/S: OC2-157
4500 South Dobson Road
Chandler, AZ 85248
(480) 715-5338

THEODORE B. OLSON
Counsel of Record
MATTHEW D. MCGILL
AMIR C. TAYRANI
GIBSON, DUNN & CRUTCHER LLP
1050 Connecticut Avenue, N.W.
Washington, D.C. 20036
(202) 955-8500

Counsel for Amici Curiae

August 22, 2006

785 n

(26)

No. 04-1350

FILED

OCT 13 2006

OFFICE OF THE CLERK
SUPREME COURT, U.S.

In The

Supreme Court of the United States

KSR INTERNATIONAL CO.,

Petitioner,

v.

TELEFLEX INC. and TECHNOLOGY HOLDING CO.,

Respondents.

On Writ Of Certiorari To The United States Court Of Appeals For The Federal Circuit

BRIEF OF THE INTELLECTUAL PROPERTY LAW ASSOCIATION OF CHICAGO AS *AMICUS CURIAE* IN SUPPORT OF RESPONDENT

PATRICK G. BURNS
GREER, BURNS & CRAIN, LTD.
300 South Wacker Drive,
Suite 2500
Chicago, Illinois 60606
(312) 360-0080
Counsel of Record for Amicus Curiae, The Intellectual Property Law Association of Chicago

DEBBIE K. WRIGHT
President, THE INTELLECTUAL PROPERTY LAW ASSOCIATION OF CHICAGO
P.O. Box 472
Chicago, Illinois 60609
(312) 987-1416

Of Counsel:

EDWARD D. MANZO
COOK, ALEX, MCFARRON, MANZO, CUMMINGS & MEHLER, LTD.
200 West Adams,
Suite 2850
Chicago, Illinois 60606
(312) 236-8500

[Additional Counsel Listed On Inside Cover]

COCKLE LAW BRIEF PRINTING CO. (800) 225-6964
OR CALL COLLECT (402) 342-2831

Of Counsel:

JAMES P. MURAFF
NEAL, GERBER & EISENBERG LLP
Two North LaSalle Street
Chicago, Illinois 60602
(312) 269-8034

STEVE Z. SZCZEPANSKI
FOLEY & LARDNER LLP
321 North Clark Street
Suite 2800
Chicago, Illinois 60610
(312) 832-4576

DEAN A. MONCO
WOOD, PHILLIPS, KATZ, CLARK & MORTIMER
Citicorp Center, Suite 3800
500 West Madison Street
Chicago, Illinois 60661
(312) 876-1800

CHRISTOPHER J. MCGEEHAN
GREER, BURNS & CRAIN, LTD.
300 South Wacker Drive
Suite 2500
Chicago, Illinois 60606
(312) 360-0080

QUESTION PRESENTED

Whether the Federal Circuit has erred in holding that a claimed invention cannot be held "obvious," and thus unpatentable under 35 U.S.C. § 103(a), in the absence of some proven " 'teaching, suggestion, or motivation' that would have led a person of ordinary skill in the art to combine the relevant prior art teachings in the manner claimed."

TABLE OF CONTENTS

	Page
INTEREST OF THE *AMICUS CURIAE*	1
SUMMARY OF THE ARGUMENT	2
ARGUMENT	3
I. Obviousness Must Be Determined By Objective Evidence, Not Subjective Speculation	3
II. Elimination Of The TSM Standard Would Have Adverse Consequences For Both Patent Prosecution And Patent Litigation	4
A. Examination In The PTO Is More Consistent And Predictable When Examiners Have TSM Evidence To Modify And Combine References	5
B. Patent Litigation Is More Consistent And Predictable When Proof Of TSM Is Required	6
III. The Patent System Beneficially Encourages Incremental Improvement As Well As Pioneering Innovation	7
IV. The TSM Standard Is Not Inflexible	9
V. The Subjective Tests Proposed By The Opponents Of The TSM Standard Are Unacceptably Vague And Arbitrary	10
CONCLUSION	14

TABLE OF AUTHORITIES

Page

CASES

Cuno Eng'g. Corp. v. Automatic Device Corp., 314 U.S. 84 (1941) 12

DyStar Textilfarben GmbH & Co. Deutschland KG v. C.H. Patrick Co., 2006 WL 2806466 (Fed. Cir. October 3, 2006) 3, 10

Gardner v. TEC Sys., Inc., 725 F.2d 1338 (Fed. Cir. 1984) 7

Graham v. John Deere Co. of Kansas City, 383 U.S. 1 (1966) 12

Lee, In re, 277 F.3d 1338 (Fed. Cir. 2002) 6

Lincoln Eng'g Co. v. Stewart-Warner Corp., 303 U.S. 545 (1938) 11

Pentec, Inc. v. Graphic Controls Corp., 776 F.2d 309 (Fed. Cir. 1985) 7

Sakraida v. Ag Pro, Inc., 425 U.S. 273 (1976) 11

Teleflex, Inc. v. KSR Int'l Co., 298 F. Supp.2d 581 (E.D. Mich. 2003) 12

U.S. v. Adams, 383 U.S. 39 (1966) 11

STATUTES

35 U.S.C. § 103(a) 3, 4, 10, 12

35 U.S.C. § 282 7

35 U.S.C. § 301 9

TABLE OF AUTHORITIES – Continued

Page

OTHER AUTHORITIES

NATIONAL ACADEMY OF PUBLIC ADMINISTRATION, U.S. PATENT AND TRADEMARK OFFICE: TRANSFORMING TO MEET THE CHALLENGES OF THE 21ST CENTURY (2005) 5

U.S. PATENT AND TRADEMARK OFFICE, MANUAL OF PATENT EXAMINING PROCEDURE (8th ed. 2001 rev. 2006) 5

INTEREST OF THE *AMICUS CURIAE*[1]

Founded in 1884, the Intellectual Property Law Association of Chicago ("IPLAC") is the oldest intellectual property law association in the nation. Its approximately 1,000 members represent a full spectrum of the profession ranging from law firm attorneys to sole practitioners, corporate attorneys, law school professors, and law students. IPLAC is centered in Chicago, a principal forum for patent litigation in this country. Every year, IPLAC's members prosecute thousands of patent applications and litigate many patent lawsuits.

IPLAC is a not-for-profit organization dedicated to maintaining a high standard of professional ethics in the practice of patent, trademark, copyright, trade secret, and associated fields of law. A principal aim is to aid in the development and administration of these laws and the manner by which they are applied by the courts and by the United States Patent and Trademark Office. IPLAC is further dedicated to providing a medium for the exchange of views on intellectual property law among those practicing in the field and to educating the public at large.

IPLAC itself has no interest in any party to this litigation or stake in the outcome of this case.

---

[1] Pursuant to Rule 37.6, *amicus curiae* certifies that no counsel for a party authored this brief in whole or in part and that no person or entity, other than *amicus*, its members, or its counsel, has made a monetary contribution to the preparation or submission of this brief. The parties have filed letters consenting to the filing of this brief with the Clerk of this Court.

SUMMARY OF THE ARGUMENT

Other briefs have explored the history of obviousness, Supreme Court precedent and the caselaw of the Federal Circuit. This brief will discuss the importance of objective evidence of obviousness, particularly proof of teaching, suggestion or motivation to combine ("TSM"), and some likely practical consequences if proof of TSM were not required. This brief will also respond to selected arguments raised in this very significant case.

IPLAC strongly supports the requirement of objective evidence of obviousness, including objective evidence of TSM. IPLAC does not oppose the development of other ways to prove obviousness, provided that they are objective, not subjective. However, the TSM standard is very flexible and provides a solid foundation on which obviousness determinations can be made in a relatively predictable, consistent manner.

As a practical matter, rejection of the TSM requirement would lead to less certainty and predictability in both patent prosecution and litigation. From an administrative standpoint in the U.S. Patent and Trademark Office ("PTO"), objective evidence showing obviousness to modify and combine is essential for training purposes, review and consistency. It is important in litigation because judges and juries are not schooled in the nuances of obviousness and non-obviousness.

Opponents of the TSM requirement advocate using subjective standards such as "synergy," "mere aggregation," and so forth. Under such subjective standards, the conclusion as to obviousness depends more on the personal experience and personality of the person making it than on the evidence. For at least this reason, such subjective

standards would have far reaching adverse consequences, including a decline in quality, consistency, and predictability in the PTO and in litigation.

The patent system favors disclosure of all non-obvious inventions over maintaining inventions as trade secrets. In so doing, it is important that the system encourage disclosure of incremental improvements, as well as pioneering breakthroughs in technology. The adoption of subjective standards that might recognize only the breakthroughs would not encourage the disclosure of incremental improvements.

ARGUMENT

I. Obviousness Must Be Determined By Objective Evidence, Not Subjective Speculation

The TSM standard implements 35 U.S.C. § 103(a) by informing the PTO and the courts of objective facts that apply to an obviousness analysis. Its purpose is to prevent hindsight reasoning, and it "informs the *Graham* analysis."[2] It does not undermine, contradict, or vary § 103(a). Evidence of TSM provides an objective standard for making an otherwise subjective and quite esoteric judgment, namely whether or not a claimed invention would have been "obvious" at the time of the invention.

[2] *DyStar Textilfarben GmbH & Co. Deutschland KG v. C.H. Patrick Co.*, 2006 WL 2806466, at *4 (Fed. Cir. October 3, 2006) [hereafter "DyStar"].

Section 103(a) itself requires objective evidence to establish obviousness, *i.e.*, specific prior art references. It requires an objective analysis of the scope and content of those references and an objective analysis of the differences between that prior art and the claimed invention. The statute is silent as to the conditions under which the references can be modified, combined, etc. to substantiate the ultimate conclusion of obviousness.

The issue in this case is whether those conditions must be based on objective evidence, known as evidence of TSM, or on subjective conclusions, such as "capable of," "wholly unexpected," etc., as asserted by the Petitioner and others. IPLAC submits that evidence to support modification and combination should be objective, and that the TSM standard for defining the nature of that evidence is well-suited to that purpose. It is flexible, as will be seen, but most importantly, it is objective.

II. Elimination Of The TSM Standard Would Have Adverse Consequences For Both Patent Prosecution And Patent Litigation

As a practical matter, objective standards such as those defined by the TSM requirement promote the goals of certainty over uncertainty, and predictability over unpredictability. Evidence of TSM also discourages the improper use of hindsight. Adoption of the subjective standards proffered by Petitioner and others would likely undermine these goals and have undesirable consequences from a practical standpoint, both in patent prosecution and in litigation.

A. Examination In The PTO Is More Consistent And Predictable When Examiners Have TSM Evidence To Modify And Combine References

From an administrative perspective, the PTO is a pyramid, with the Board of Appeals at the top and hundreds of examiners at all levels of skill at the bottom. Many of the examiners are not attorneys, and turnover is infamously high.[3] Effective administration requires well-defined guidelines for consistent examination and to assure fair and even treatment to all applicants.

The PTO is staffed by junior examiners who do not have signatory authority. Their work is reviewed by supervisors who are authorized to sign papers. The supervisors are also responsible for training, quality and consistency. Among many other things, the junior examiners must learn about the legal standard for rejecting a claimed invention as obvious. This includes an understanding of how and when references can be modified and combined to establish obviousness, which is the heart of the TSM standard.[4]

If a rejection is appealed, the PTO Board of Patent Appeals needs the examiner's objective findings to review the decision and consider the applicant's arguments. The

---

[3] NATIONAL ACADEMY OF PUBLIC ADMINISTRATION, U.S. PATENT AND TRADEMARK OFFICE: TRANSFORMING TO MEET THE CHALLENGES OF THE 21ST CENTURY 79-82 (2005).

[4] The PTO has developed detailed instructions for establishing *prima facie* obviousness, including guidelines for establishing evidence of TSM. U.S. PATENT AND TRADEMARK OFFICE, MANUAL OF PATENT EXAMINING PROCEDURE ¶¶ 706.02(j), 2142, 2143 (8th ed. 2001 rev. 2006), available at www.uspto.gov/web/offices/pac/mpep/index.html.

Board's decision is reviewed by the Federal Circuit or the federal district court, where detailed, objective findings are also a practical necessity.[5] Without such objective findings, beginning at the first level of review by junior examiners, effective review is all but impossible.

All things considered, including the size of the bureaucracy, patent prosecution in the PTO is relatively consistent and predictable, in part because of the TSM standard. Without objective evidence sufficient to meet the TSM standard, the presently orderly and relatively predictable prosecution of patents is apt to devolve into a chaotic condition of unpredictability and uncertainty. In addition, there will be little or no protection against the improper use of hindsight. These consequences can and should be avoided by retaining the TSM standard.

B. Patent Litigation Is More Consistent And Predictable When Proof Of TSM Is Required

District court judges and juries do not have the training of examiners, yet they must decide whether an invention would have been obvious to a hypothetical person in a certain technical field. Without evidence that links the prior art presented, the judge or jury would be left adrift, with no objective reference from which to decide the ultimate conclusion regarding obviousness.

Petitioner argues that it is too difficult to prove obviousness in litigation.[6] It is true that patents enjoy a

---

[5] *See, e.g., In re Lee*, 277 F.3d 1338, 1342-1345 (Fed. Cir. 2002) (holding that the Administrative Procedure Act requires that the Board make findings for purposes of appellate review.)

[6] Brief of Petitioner at 32-42.

statutory presumption of validity and that the statute fixes the burden of proving invalidity on the patent challenger.[7] The evidence must be clear and convincing.[8] The TSM standard merely calls for evidence that justifies and explains the modifications and combinations of references assertedly proving invalidity. If there is a problem, it does not lie with the TSM standard.

Here, too, the TSM evidence-requiring standard is an important tool in obtaining relative predictability and certainty. As a practical matter, overturning the TSM standard would have an adverse impact on patent enforcement because that tool of predictability and certainty would be compromised.

III. The Patent System Beneficially Encourages Incremental Improvement As Well As Pioneering Innovation

Petitioner argues that the TSM standard has lowered the level of invention required for patentability to an undesirable level and has greatly increased the difficulty of overcoming the presumption of validity in litigation.[9] The argument is misplaced.

The patent system has contributed to an explosion of technological development in this country, particularly since the creation of the Federal Circuit. That development can be broadly described to include both fundamental

---

[7] 35 U.S.C. § 282.

[8] *See, e.g., Pentec, Inc. v. Graphic Controls Corp.*, 776 F.2d 309, 312 (Fed. Cir. 1985); *Gardner v. TEC Sys., Inc.*, 725 F.2d 1338, 1345 (Fed. Cir. 1984).

[9] Brief of Petitioner at 33.

advances and small, incremental improvements in existing products, as well. The patent system is crafted to encourage innovation at all levels.

The invention in this case was an incremental improvement, so incremental improvements will be addressed here.

The patent system encourages incremental improvements in technology because even small technological advances are extremely valuable to the progress of technology, and valuation of such improvements is best left to the market. As such, the patent system performs an important function: encouraging disclosure of even incremental innovation over secrecy.[10]

There should be no harm in patenting small advances in technology, because the coverage of such patents must be limited to those small advances. If the small advances are not technologically or economically important, infringement of such patents can be easily avoided by not using these small patented improvements, preferably by achieving the same or a better result in a substantially different way or by using substantially different structures.

Patents do sometimes issue with unduly broad claims, and it is reasonable to assume that this occurs on occasion because the PTO examiner handling the application did not muster adequate TSM evidence. The patent system provides safeguards against such broad claims. First, the statute provides for reexamination after issuance, which

---

[10] Patents on incremental improvements also serve the important function of encouraging investment, because investors and banks are more likely to risk resources in ventures having the competitive advantages flowing from even narrow patent rights.

can be initiated by a third party.[11] Second, federal courts have jurisdiction to declare patents invalid after receiving appropriate evidence.

IV. The TSM Standard Is Not Inflexible

Opponents of the TSM standard incorrectly assert that the TSM standard is an inflexible requirement and urge this Court to open the door to other ways to prove obviousness. IPLAC certainly agrees that if there are other objective proofs of obviousness that may apply in a given case, such proof should not be rejected. Such additions or alternatives to the TSM standard could be developed, but that should be left to the Federal Circuit.[12] In any event, the TSM standard has broad flexibility, as will be seen.

The TSM standard addresses three types of evidence which may be used to support a conclusion of obviousness: teaching, suggestion or motivation.

The "teaching" leg of the rule is the most stringent, because a teaching suggests the most detailed form of disclosure. Evidence of an explicit "suggestion" to combine might be less specific than that required to establish a teaching. It is less stringent and more flexible. Evidence of an "implicit" suggestion can also establish obviousness, with an even lower threshold of actual disclosure. Here, evidence of the level of skill in the art and knowledge of those of ordinary skill can be quite relevant.

---

[11] 35 U.S.C. § 301 *et seq.*

[12] The Federal Circuit was created to specialize in patent law and address its many complex issues, including obviousness.

Motivation to solve a problem in a particular way is another alternative leg that can be used under the TSM standard to establish obviousness. This offers even more flexibility in judgment. As Chief Judge Michel of the Federal Circuit said recently:

> In contrast to the characterization of some commentators, the suggestion test is not a rigid categorical rule. The motivation need not be found in the references sought to be combined, but may be found in any number of sources, including common knowledge, the prior art as a whole, or the nature of the problem itself . . . . As we explained, . . . "there is no requirement that the prior art contain an express suggestion to combine known elements to achieve the claimed invention. Rather, the suggestion to combine may come from the prior art, as filtered through the knowledge of one skilled in the art." [citations omitted]

DyStar, *supra* note 2, at *4.

Thus, the TSM standard is quite flexible, adequately implements § 103(a), is consistent with this Court's precedents, and serves the public interest in obtaining consistent, reliable, predictable prosecution and protection of patents.

V. The Subjective Tests Proposed By The Opponents Of The TSM Standard Are Unacceptably Vague And Arbitrary

Petitioner and other opponents of the TSM standard propose abandoning the TSM standard and replacing it with a different test. The arguments include making the

test whether a person of ordinary skill would have been "capable of" making the combination,[13] or whether the result was "synergistic,"[14] "wholly unexpected,"[15] reached an "extraordinary level,"[16] or was a "mere aggregation."[17] The Government suggests making the determination on a case-by-case basis.[18] Each of these subjective standards is vague and arbitrary, and each has flaws which will become apparent.

The suggested "capable of" standard for proving obviousness might or might not raise the level of patentable invention, but it would surely create uncertainty. More importantly, it would undermine one of the two purposes of the patent system – prompt disclosure.

The patent system rewards those who can *and do*, not those who can but don't. Thus, if 1,000 people are "capable of" combining several references to obtain a claimed invention, but 999 do not disclose the combination, the patent system rewards the first one who does disclose the invention, provided that the combination is not "obvious."

In the present case, all of the relevant prior art was publicly available at least four (4) years before February 14, 1998, the presumptive date of the invention of the

---

[13] Brief of Petitioner at 25-27.

[14] Brief of Petitioner at 24, 31, *citing Sakraida v. Ag Pro, Inc.*, 425 U.S. 273 (1976).

[15] Brief of Petitioner at 21, *citing U.S. v. Adams*, 383 U.S. 39 (1966).

[16] Brief of *Amicus Curiae* United States at 10, 24.

[17] Brief of Petitioner at 23, 26, *citing Lincoln Eng'g Co. v. Stewart-Warner Corp.*, 303 U.S. 545 (1938).

[18] Brief of *Amicus Curiae* United States at 25-27.

patent-in-suit.[19] *Teleflex, Inc. v. KSR Int'l Co.*, 298 F. Supp.2d 581, 588-89 (E.D. Mich. 2003). There may have been others who had the innovative abilities to make the invention, *i.e.*, they were "capable of" making it, but they did not. In sum, measuring patentability by whether one of ordinary skill was "capable of" making an invention would be wrong.

The "synergy," "wholly unexpected" and "extraordinary level" perspectives are also completely subjective. Among other things, they depend on the viewer. One of ordinary skill in the art might find a result wholly unexpected or extraordinary that would not be unexpected or extraordinary to a technically untrained judge or jury, and *vice versa*. There would be no sense of predictability, and the patent system would not serve the public interest.[20]

The "synergy," "wholly unexpected" and "extraordinary level" verbiage suggests a high level of invention. However, a patent is not a Nobel Prize reserved for the best and only the best. It is an incentive to innovate,

---

[19] The district court relied on a combination of three pieces of prior art in making its obviousness determination: U.S. Pat. No. 5,010,782 to Asano; U.S. Pat. No. 5,385,068 to White, and a pedal assembly installed in certain 1994 Chevrolet pick-up trucks. These pieces of prior art have effective dates of July 28, 1989, December 18, 1992 and 1994, respectively. *Id.* at 588-89.

[20] In the last sentence of § 103(a) ("Patentability shall not be negatived by the manner in which the invention was made"), Congress rejected the "flash of genius" test of patentability, which is at least analogous to Petitioner's proposed tests. *See Graham v. John Deere Co. of Kansas City*, 383 U.S. 1, 15 (1966) ("It also seems apparent that Congress intended by this last sentence of § 103 to abolish the test that it believed this Court announced in the controversial phrase 'flash of creative genius' used in *Cuno Engineering. Corp. v. Automatic Device Corp.*, 314 U.S. 84 (1941)").

improve and disclose at all levels at or above the non-obvious threshold. Further, the patent statute has no requirement that to be patentable, an invention must be "synergistic," "wholly unexpected" or the product of an "extraordinary level" of skill.

The so-called "mere aggregation" test is also subjective. If an aggregation of components is truly "mere," there will be evidence of teaching, suggestion, or motivation to combine the elements.

The Government argues in favor of a case-by-case analysis that could take into account differences in the art, as well as customs and practices in various arts. However, the Government provides no useful guidance for how such a test would be implemented.

These subjective, undeveloped concepts would create less certainty and predictability than we presently enjoy and would imperil the incentives to innovate and invest in innovating. They should not replace the TSM standard.

CONCLUSION

For the reasons set forth above, IPLAC respectfully submits that the Court should retain the requirement of TSM evidence and affirm the judgment of the United States Court of Appeals for the Federal Circuit.

Respectfully submitted,

PATRICK G. BURNS
GREER, BURNS & CRAIN, LTD.
300 South Wacker Drive
Suite 2500
Chicago, Illinois 60606
(312) 360-0080
Counsel of Record for The Intellectual Property Law Association of Chicago

DEBBIE K. WRIGHT
President, THE INTELLECTUAL LAW ASSOCIATION OF CHICAGO
P.O. Box 472
Chicago, Illinois 60609
(312) 987-1416

Of Counsel:

EDWARD D. MANZO
COOK, ALEX, MCFARRON, MANZO, CUMMINGS & MEHLER, LTD.
200 West Adams, Suite 2850
Chicago, Illinois 60606
(312) 236-8500

JAMES P. MURAFF
NEAL, GERBER & EISENBERG LLP
Two North LaSalle Street
Chicago, Illinois 60602
(312) 269-8034

STEVE Z. SZCZEPANSKI
FOLEY & LARDNER LLP
321 North Clark Street
Suite 2800
Chicago, Illinois 60610
(312) 832-4576

DEAN A. MONCO
WOOD, PHILLIPS, KATZ, CLARK
& MORTIMER
Citicorp Center, Suite 3800
500 West Madison Street
Chicago, Illinois 60661
(312) 876-1800

CHRISTOPHER J. MCGEEHAN
GREER, BURNS & CRAIN, LTD.
300 South Wacker Drive
Suite 2500
Chicago, Illinois 60606
(312) 360-0080

October 2006

549A

Supreme Court, U.S.
FILED
AUG 2 2 2006
OFFICE OF THE CLERK

(10)

No. 04-1350

IN THE
Supreme Court of the United States

KSR INTERNATIONAL CO.,
Petitioner,

v.

TELEFLEX INC. and
TECHNOLOGY HOLDING CO.,
Respondents.

On Writ of Certiorari to the United States Court of Appeals for the Federal Circuit

BRIEF OF INTELLECTUAL PROPERTY LAW PROFESSORS AS *AMICI CURIAE* IN SUPPORT OF PETITIONER

KATHERINE J. STRANDBURG*
Associate Professor
DEPAUL UNIVERSITY
COLLEGE OF LAW
25 East Jackson Boulevard
Chicago, IL 60604
(312) 362-8536

JOSEPH SCOTT MILLER
Associate Professor
LEWIS & CLARK LAW SCHOOL
10015 S.W. Terwilliger Blvd.
Portland, OR 97219
(503) 768-6600

* *Counsel of Record for Amici Curiae*

(List of *Amici Curiae* continues on inside cover)

MICHAEL A. CARRIER
Professor of Law
RUTGERS LAW SCHOOL – CAMDEN
217 North Fifth Street
Camden, NJ 08102

THOMAS F. COTTER
Professor of Law
UNIVERSITY OF MINNESOTA LAW SCHOOL
229 19th Avenue South
Minneapolis, MN 55455

ROCHELLE COOPER DREYFUSS
Pauline Newman Professor of Law
NEW YORK UNIVERSITY SCHOOL OF LAW
40 Washington Square South
New York, NY 1001

STACEY L. DOGAN
Professor of Law
NORTHEASTERN UNIVERSITY SCHOOL OF LAW
400 Huntington Avenue,
Boston, MA 02115

CHRISTINE HAIGHT FARLEY
Professor of Law
AMERICAN UNIVERSITY WASHINGTON COLLEGE OF LAW
4801 Massachusetts Avenue N.W.
Washington, DC 20016

EILEEN KANE
Associate Professor
PENN STATE DICKINSON SCHOOL OF LAW
150 South College St.
Carlisle, PA 17013

MARY LAFRANCE
William S. Boyd Professorof Law
WILLIAM S. BOYD SCHOOL OF LAW
University of Nevada, Las Vegas
Las Vegas, NV 89154

MARK P. MCKENNA
Assistant Professor of Law
SAINT LOUIS UNIVERSITY
3700 Lindell Blvd.
St. Louis, MO 63108

MALLA POLLACK
Professor
AMERICAN JUSTICE SCHOOL OF LAW
2000 McCracken Blvd
Paducah, KY 42001

MATTHEW SAG
Assistant Professor
DE PAUL UNIVERSITY COLLEGE OF LAW
25 East Jackson Boulevard
Chicago, IL 60604

PAMELA SAMUELSON
Richard M. Sherman Distinguished Professor of Law
BOALT HALL SCHOOL OF LAW, UNIVERSITY OF CALIFORNIA, BERKELEY
Berkeley, CA 94720

JOHN R. THOMAS
Professor of Law
GEORGETOWN UNIVERSITY
600 New Jersey Avenue, NW
Washington, DC 2000

TABLE OF CONTENTS

		Page
TABLE OF CONTENTS		i
TABLE OF AUTHORITIES		iii
INTEREST OF THE AMICI CURIAE		1
SUMMARY OF THE ARGUMENT		2
ARGUMENT		5
I.	Obviousness is a Question of Law Incorporating Important Issues of Innovation Policy	5
II.	The Federal Circuit's Suggestion Test Collapses the Legal Determination of Nonobviousness into a Factual Determination of What is Available in the Prior Art.	9
III.	The Suggestion Test Lowers the Nonobviousness Standard by Disregarding the Ordinary Problem-Solving Ability of the Skilled Artisan.	10
IV.	The Federal Circuit's Suggestion Test Precludes Consideration of Relevant Social and Economic Factors Indicating Obviousness	17
V.	The Suggestion Test is Not Reasonably Applicable by the PTO and Negates the Agency's Expertise	21
VI.	The Suggestion Test's Low Standard of Patentability is Bad Patent Policy	23

TABLE OF CONTENTS—Continued

Page

VII. This Court Should Mandate a Return to the *Graham* Framework, Asking Whether the Claimed Invention Could Be Made By Routine Application of the Level of Ordinary Skill in the Art 25

CONCLUSION 28

TABLE OF AUTHORITIES

Page

Cases:

ACS Hospital Systems, Inc. v. Montefiore Hospital, 732 F.2d 1572 (Fed. Cir. 1984) 9

Anderson's-Black Rock, Inc. v. Pavement Salvage Co., 396 U.S. 57 (1969) 19-20

In Re Bigio, 381 F.3d 1320 (Fed. Cir. 2004) 12

Bonito Boats, Inc. v. Thunder Craft Boats, Inc., 489 U.S. 141 (1989) 2, 5, 6

Chore-Time Equipment, Inc. v. Cumberland Corp., 713 F.2d 774 (Fed. Cir. 1983) 20

Environmental Designs, Ltd. v. Union Oil Co., 713 F.2d 693 (Fed. Cir. 1983) 16

Gambro Lundia AB v. Baxter Healthcare Corp., 110 F.3d 1573 (Fed. Cir. 1997) 3

In re Geiger, 815 F.2d 686 (Fed. Cir. 1987) 9

Graham v. John Deere, 383 U.S. 1 (1966) ..... *passim*

Great A&P Tea Co. v. Supermarket Corp., 340 U.S. 147 (1950) 7, 20

Hughes Tool Co. v. Dresser Inds., 816 F.2d 1549 (Fed. Cir. 1987) 3

In re Kahn, 441 F.3d 977 (Fed. Cir. 2006) 9, 13

TABLE OF AUTHORITIES—Continued

Page

Karsten Mfg. Corp. v. Cleveland Golf Co., 242 F.3d 1376 (Fed. Cir. 2001) 9

In re Lee, 277 F.3d 1338 (Fed. Cir. 2002) 4, 22

In re Oetiker, 977 F.2d 1443 (Fed. Cir. 1992) 9

Orthopedic Equipment Co. v. All Orthopedic Appliances, Inc., 707 F.2d 1376 (Fed. Cir. 1983) 17

Princeton Biochemicals, Inc. v. Beckman Coulter, Inc., 411 F.3d 1332 (Fed. Cir. 2005) 13

In re Raynes, 7 F.3d 1037 (Fed. Cir. 1993) 9

Ruiz v. A.B. Chance Co., 357 F.3d 1270 (Fed. Cir. 2004) 13

Sakraida v. Ag Pro, Inc., 425 U.S. 273 (1976) 19

Scott & Williams v. Aristo Hosiery Co., 300 F. 622, 624-27 (D.N.Y. 1924) (L. Hand, J.), *aff'd* 7 F.2d 1003 (2d Cir. 1925) 19

TABLE OF AUTHORITIES—Continued

Page

State Street Bank & Trust Co. v. Signature Financial Group, Inc., 149 F.3d 1368 (Fed. Cir. 1998) 18-19

Stratoflex, Inc. v. Aeroquip Corp., 713 F.2d 1530 (Fed. Cir. 1983) 17, 20

Constitution and Statutes:

U.S. Const., art. I, § 8, cl. 8 23

35 U.S.C. § 101 5

35 U.S.C. § 102 5

35 U.S.C. § 103 ..... *passim*

Legislative Materials:

H. R. Rep. No. 82-1923 (1952) 7

S. Rep. No. 82-1979 (1952) 7

TABLE OF AUTHORITIES—Continued

Page

Other:

Margo A. Bagley, *Internet Business Model Patents: Obvious by Analogy*, 7 Mich. Telecomm. & Tech. L. Rev. 253 (2000-2001) 23

John H. Barton, *Non-Obviousness*, 43 IDEA 475 (2003) 7, 24

Stuart Minor Benjamin and Arti K. Rai, *Who's Afraid of the APA? What the Patent System Can Learn from Administrative Law*, 95 Geo. L.J. (forthcoming 2006) 21, 22

Dan L. Burk & Mark Lemley, *Is Patent Law Technology-Specific?*, 17 Berkeley Tech. L.J. 1155 (2002) 18

Wesley M. Cohen et al., *Protecting Their Intellectual Assets: Appropriability Conditions and Why U.S. Manufacturing Firms Patent (or Not)* (Nat'l. Bureau of Econ. Research, Working Paper No. W7552, 2000), *available at* http://www.nber.org/papers/w7552. 7

Jay Dratler, Jr., *Alice in Wonderland Meets the U.S. Patent System*, 38 Akron L. Rev. 299 (2005) 18-19

TABLE OF AUTHORITIES—Continued

Page

Rebecca Eisenberg, *Obvious to Whom? Evaluating Inventions from the Perspective of PHOSITA*, 19 Berkeley Tech. L.J. 885 (2004) 11, 14

Federal Trade Commission, *To Promote Innovation: The Proper Balance of Competition and Patent Law and Policy* (2003) 14-15

Bronwyn H. Hall and Dietmar Harhoff, *Post-Grant Reviews in the U.S. Patent System — Design Choices and Expected Impact*, 19 Berkeley Tech. L.J. 989 (2004) 24

Michael A. Heller & Rebecca S. Eisenberg, *Can Patents Deter Innovation? The Anti-commons in Biomedical Research*, Science, May 1, 1998, at 698 25

Glynn S. Lunney, Jr., *E-Obviousness*, 7 Mich. Telecomm. & Tech. L. Rev. 363 (2000) 23

Joseph P. Meara, *Just Who is the Person Having Ordinary Skill in the Art? Patent Law's Mysterious Personage*, 77 Wash. L. Rev. 267 (2002) 16

TABLE OF AUTHORITIES—Continued

Page

Robert P. Merges, *Commercial Success and Patent Standards: Economic Perspectives on Innovation*, 76 Cal. L. Rev. 805 (1988) 20

Stephen A. Merrill et al., National Research Council, *A Patent System for the 21st Century* (2004) 22

Joseph S. Miller, *Building A Better Bounty: Litigation-Stage Rewards for Defeating Patents*, 19 Berkeley Tech. L.J. 667 (2004) 8

Jerome R. Ravetz, *Scientific Knowledge and its Social Problems* (1971) 14

Giles S. Rich, *The Principles of Patentability*, 42 J. Pat. Off. Soc'y 75 (1960) 2, 6

Carl Shapiro, *Navigating the Patent Thicket: Cross Licensing, Patent Pools, and Standard Setting*, in *Innovation Policy and the Economy* (Adam Jaffe et al., eds., 2001) 25

Richard H. Stern, *Scope-of-Protection Problems with Patents and Copyrights on Methods of Doing Business*, 10 Fordham Intell. Prop. Media & Ent. L.J. 105 (1999) 19

TABLE OF AUTHORITIES—Continued

Page

John R. Thomas, *Formalism at the Federal Circuit,* 52 Am. U. L. Rev. 771 (2003)..... 14

INTEREST OF THE *AMICI CURIAE*

Amici Curiae respectfully submit this brief in support of Petitioner, KSR International Co., because the judgment below stems from the application of an obviousness test which is inconsistent with the patent statute, with this Court's precedent, and with good patent policy.[1]

Amici are fourteen law professors who teach and write about intellectual property at law schools within the United States and have an interest in the proper interpretation and application of intellectual property law. *Amici* believe that patent law should provide incentives to search for technological solutions that go beyond routine advances. In contrast, the Federal Circuit's incorrect interpretation of the obviousness standard, as applied in this case, provides incentives for seeking patent rights on obvious extensions of existing technologies. The patenting of obvious extensions of existing technologies has high social costs and is contrary to the Constitutional purpose of the patent system.

This case provides the Court with an opportunity to overturn the Federal Circuit's much-criticized current approach to obviousness, which is at odds with the statutory language, inconsistent with this Court's precedent, and contrary to the goals of the patent system. Unless this Court intervenes, countless applications and issued patents on obvious technologies will continue to burden the U.S. Patent and Trademark Office, the federal courts, and the public at large.

---

[1] Both parties have consented to the filing of this brief and written consents have been filed with the clerk. Pursuant to this Court's Rule 37.6, *amici* represent that this brief was not authored in whole or in part by counsel for any party, and that no person or entity other than *amici* and their respective educational institutions has made a monetary contribution to the preparation or submission of this brief. The names of the educational institutions are provided for identification purposes only, and the institutions have not reviewed or approved this brief.

SUMMARY OF THE ARGUMENT

The nonobviousness requirement for patentability is imposed so that patents will be granted only for significant advances over previously known technology. An appropriately tuned standard ensures that patents are awarded only for "unobvious developments which would not occur spontaneously from the application of . . . ordinary skill." Giles S. Rich, *The Principles of Patentability,* 42 J. Pat. Off. Soc'y 75, 81-82 (1960). Patenting obvious advances which would have occurred in the ordinary course of competitive research and development creates an unnecessary drag on innovation through higher prices to consumers and transaction costs associated with searching for, licensing, and enforcing these unnecessary patents. The availability of patents on obvious combinations overwhelms the Patent and Trademark Office with applications for patents on obvious combinations of previously existing technologies.

The statutory nonobviousness standard reflects "a careful balance between the need to promote innovation and the recognition that imitation and refinement through imitation are both necessary to invention itself and the very lifeblood of a competitive economy." *Bonito Boats, Inc. v. Thunder Craft Boats, Inc.*, 489 U.S. 141, 146 (1989). To strike this balance while avoiding hindsight bias, Congress and this Court have mandated that obviousness be assessed from the perspective of the "person having ordinary skill in the art" (PHOSITA).

The Federal Circuit has adopted a test for obviousness which is inconsistent with this Court's precedent and allows patents to issue on obvious inventions. The Federal Circuit's test denies a patent on a combination of previously available technology only when the patent examiner or a litigation opponent can present evidence of a suggestion, motivation, or teaching to combine in the prior art. Without such a

"suggestion to combine," a claimed invention is never deemed obvious, regardless of the circumstances surrounding its development. While this "suggestion test" is framed as a factual inquiry, it effectively swallows the legal inquiry into obviousness and imposes an inappropriately low standard. The suggestion test's focus on evidence of what could be done by combining the prior art marginalizes the PHOSITA, equating ordinary *skill* with knowledge and motivation and ignoring the aspect of ordinary skill comprising routine experimentation and application of ordinary tools, methods, and problem-solving abilities.

Because a prima facie showing of obviousness cannot be made without evidence of a "suggestion to combine" prior art references, the Federal Circuit's approach also turns this Court's observation that the inventive context may be relevant to assessing obviousness into a one-way ratchet of "objective indicia of nonobviousness" which can be used only in support of patent issuance. Compare *Graham v. John Deere Co.*, 383 U.S. 1, 17-18 (1966) ("[S]econdary considerations . . . might be utilized to give light to the circumstances surrounding the origin of the subject matter sought to be patented. As indicia of obviousness or nonobviousness, these inquiries may have relevance.") with *Gambro Lundia AB v. Baxter Healthcare Corp.*, 110 F.3d 1573, 1579 (Fed. Cir. 1997) (referring to "the fourth prong of the obviousness determination—the objective indicia of nonobviousness"); *Hughes Tool Co. v. Dresser Inds.*, 816 F.2d 1549, 1556 (Fed. Cir. 1987) (referring to "objective indicia of nonobviousness (the so-called 'secondary considerations'"). Framed in this way, the obviousness inquiry ignores social, economic, and technical changes that might render particular advances *obvious* upon the application of ordinary skill in the art.

Besides its substantive failings, the Federal Circuit's approach fails to take advantage of patent examiner expertise. "[T]he primary responsibility for sifting out unpatentable material lies in the Patent Office," *Graham*, 383 U.S. at 18.

Federal Circuit precedent requires patent examiners to present evidence in the record when seeking to rely on the common knowledge of those skilled in the art or the nature of the problem to be solved to meet the suggestion requirement. *See, e.g., In re Lee*, 277 F.3d 1338, 1345 (Fed. Cir. 2002). By imposing excessively stringent evidentiary requirements and framing the ultimate judgment of obviousness as essentially a factual inquiry, the Federal Circuit's approach hampers the PTO's application of its expertise to the obviousness question. This is particularly unfortunate since the *ex parte* nature of patent examination leaves the patent examiners as the only available representatives of the "person having ordinary skill in the art" during examination. Despite these limitations imposed on the examiners' ability to weed out obvious patent claims, issued patents that combine prior technology are afforded a presumption of validity which can be overcome only by clear and convincing evidence of a suggestion, motivation, or teaching to combine.

The perspective of the "person of ordinary skill in the art" must be brought back into its rightful place in the legal inquiry into obviousness. A robust inquiry into the level of ordinary skill in the art—which considers not only what is already known in a particular field, but also what is within the reach of ordinary skill, including routine experimentation and application of tools, methods, and problem-solving abilities—should be undertaken as a basis for the legal assessment of obviousness.

The consideration given to the technical and social context in which a claimed invention was made should expand to incorporate factors suggesting that a claimed invention was an obvious application of ordinary skill, rather than being confined to a one-sided inquiry into indicia of nonobviousness. With the *Graham* paradigm thus reinstated, the patentability standard would better serve its Constitutional purpose of promoting technological progress.

ARGUMENT

I. Obviousness is a Question of Law Incorporating Important Issues of Innovation Policy

To obtain protection under federal patent law, technological developments within the scope of statutory subject matter under 35 U.S.C. § 101 must meet three substantive requirements, which can be summarized as utility, novelty, and nonobviousness. *See* 35 U.S.C. §§ 101 (utility), 102 (novelty), and 103 (nonobviousness). As this Court has recognized,

> [b]oth the novelty and the nonobviousness requirements of federal patent law are grounded in the notion that concepts within the public grasp, or those so obvious that they readily could be, are the tools of creation available to all. They provide the baseline of free competition upon which the patent system's incentive to creative effort depends.

Bonito Boats, Inc. v. Thunder Craft Boats, Inc., 489 U.S. 141, 156 (1989). This legal standard has Constitutional dimensions. "Innovation, advancement, and things which add to the sum of useful knowledge are inherent requisites in a patent system which by constitutional command must 'promote the Progress of . . . useful Arts.' This is the *standard* expressed in the Constitution and it may not be ignored." *Graham v. John Deere Co.*, 383 U.S. 1, 6 (1966) (emphasis in original).

Because the novelty condition precludes patenting only if a claimed invention is completely anticipated by a single piece of prior art, the requirement of nonobviousness is the sole provision which fully implements the core notion of patent law that patents should be granted only for significant advances over previously known technology. Patents are awarded as "an inducement, to bring forth new knowledge." *Graham*, 383 U.S. at 9. Thus, as articulated by one of the principal drafters of the 1952 Patent Act, only "unobvious

developments which would not occur spontaneously from the application of . . . ordinary skill" are patentable. Giles S. Rich, *The Principles of Patentability,* 42 J. Pat. Off. Soc'y 75, 81-82 (1960). Obvious developments "will be made anyway, without the 'fuel of interest' which the patent system supplies." *Id.* Patenting combinations of what is already known that would have been developed without the patent incentive needlessly imposes the costs of exclusivity on the public.

To implement the core patent policy of granting patents only on significant advances in knowledge, Congress chose a standard embodied in Section 103 of the Patent Act, which denies patent protection when "the differences between the subject matter sought to be patented and the prior art are such that the subject matter as a whole would have been obvious at the time the invention was made to a person having ordinary skill in the art to which said subject matter pertains." 35 U.S.C. § 103. The statutory standard embodies "a careful balance between the need to promote innovation and the recognition that imitation and refinement through imitation are both necessary to invention itself and the very lifeblood of a competitive economy." *Bonito Boats,* 489 U.S. at 146.

The Court of Appeals for the Federal Circuit has developed a different, and lower, standard than that embodied in the Patent Act. Rather than focus on what the person of ordinary skill in the relevant art would find obvious, the Federal Circuit's test denies a patent only if there is evidence of a specific "suggestion, teaching, or motivation to combine the relevant prior art teachings in the manner claimed." Appendix to Petition for Certiorari (hereinafter "Pet. App.") at 6a (citing prior Federal Circuit authorities). This "suggestion test" is found neither in the Patent Act nor in this Court's relevant precedent. It sets the patentability threshold below what would be appropriate to ensure that patents, on average, are granted when they are needed to induce technological

progress beyond that which will occur as a matter of course without the patent incentive.

The ultimate question of whether a particular technological advance is sufficient to merit an award of patent exclusivity is a question of law. *Graham*, 383 U.S. at 17, citing *Great A&P Tea Co. v. Supermarket Corp.*, 340 U.S. 147, 155 (1950). This is as it must be—the determination whether "the difference between [a] new thing and what was known before" is "sufficiently great to warrant a patent" is at bottom a question of innovation policy. *Graham*, 383 U.S. at 14-15, quoting S. Rep. No. 82-1979 (1952) and H. R. Rep. No. 82-1923 (1952). Implicit in the legal interpretation of the statutory phrase "would have been obvious" is a determination of just how nonobvious a new development must be before a patent is granted.

The baseline of free competition, coupled with first mover advantages and other means of profiting from innovative activity, such as robust trademark protection, provides a natural engine of technical progress on which the patent system is meant to build. *See, e.g.*, John H. Barton, *Non-Obviousness*, 43 IDEA 475, 491, 493 (2003) (noting non-patent incentives for invention and citing Wesley M. Cohen et al., *Protecting Their Intellectual Assets: Appropriability Conditions and Why U.S. Manufacturing Firms Patent (or Not)* (Nat'l Bureau of Econ. Research Working Paper No. W7552, 2000), *available at* http://www.nber.org/papers/w7552 (last visited Aug. 9, 2006) for survey evidence indicating the importance of non-patent incentives).

Patents are not necessary for advances that are the natural outcome of the competitive market in a particular technology and its concomitant routine level of research and development. Patents, rather, ought to inspire those inventive efforts and disclosures that would otherwise be deterred by the free riding of competitors. Granting patents on innovations that are not substantial enough to require a patent incentive

imposes high social costs—including the transaction costs of licensing, deterrence of follow-on invention, and the administrative and litigation costs of unnecessary patent examination and enforcement. *See* Joseph S. Miller, *Building a Better Bounty: Litigation-Stage Rewards for Defeating Patents*, 19 Berkeley Tech. L.J. 667, 690 (2004) (discussing social costs of improvidently granted patents).

The appropriate level of inventiveness necessary for patentability may vary by technological area. Some technological areas, such as software, tend to be highly cumulative and incremental. In such an art, it will often be well within the competence of the ordinarily skilled artisan to take pieces of prior technology and meld them together into a new whole. Other areas, such as pharmaceuticals, may be less predictable and may require large investments and long years of research to make significant advances. The statutory requirement reflects this variance because it judges obviousness from the perspective of the "person having ordinary skill in the art" (or PHOSITA), thus incorporating differences in the baseline competitive processes in different fields. The PHOSITA perspective is critical if we are both to avoid awarding patents for developments that would arise as a matter of course in the ordinary application of inventive skill and to avoid denying patents to inventions that appear deceptively simple in hindsight but pose problems not evident to the outsider to a particular technology.

In *Graham*, this Court laid out three central factual questions which must be answered in order for the legal determination of obviousness to be made: "the scope and content of the prior art are to be determined; differences between the prior art and the claims at issue are to be ascertained; and the level of ordinary skill in the pertinent art resolved." *Graham*, 383 U.S. at 17. This Court also noted the potential for the "circumstances surrounding the origin of the subject matter sought to be patented" to provide some additional "indicia of obviousness or nonobviousness." The *Graham* factors, along

with the non-technical "secondary considerations," provide input for answering the legal question of obviousness. They amply guard against the application of hindsight by focusing the entire inquiry on the context in which an invention was made.

II. The Federal Circuit's Suggestion Test Collapses the Legal Determination of Nonobviousness into a Factual Determination of What is Available in the Prior Art.

Over the past two decades, the Federal Circuit has gradually developed an obviousness test which effectively replaces the broad legal and policy considerations properly embodied in the obviousness determination with a factual inquiry into what is already available in the prior art. The Federal Circuit permits invalidation of patents (or denial of applications) for obviousness only when challengers can present evidence of a "suggestion or incentive," *ACS Hospital Systems, Inc. v. Montefiore Hospital*, 732 F.2d 1572, 1577 (Fed. Cir. 1984), "teaching, suggestion or incentive," *In re Geiger*, 815 F.2d 686, 688 (Fed. Cir. 1987), "reason, suggestion, or motivation," *In re Oetiker*, 977 F.2d 1443, 1447 (Fed. Cir. 1992), or "teaching, suggestion or motivation," *In re Raynes*, 7 F.3d 1037, 1039 (Fed. Cir. 1993), to combine previously existing technologies in the prior art. Evidence of such a "suggestion to combine" "in the prior art" is part of the *prima facie* showing of obviousness that patent examiners or later litigants must make. *See In re Kahn*, 441 F.3d 977, 986 (Fed. Cir. 2006); *Karsten Mfg. Corp. v. Cleveland Golf Co.*, 242 F.3d 1376, 1385 (Fed. Cir. 2001), ("in holding an invention obvious in view of a combination of references, there must be some suggestion, motivation, or teaching in the prior art that would have led a person of ordinary skill in the art to select the references and combine them in the way that would produce the claimed invention.")

This suggestion test cannot be found anywhere in Section 103 or in any other part of the Patent Act. This Court has

directly addressed the issue of obviousness on several occasions. None of its discussions gives any basis for grafting a suggestion test onto the statutory language. *See e.g., Graham*, 383 U.S. at 17-18 (laying out the factors underlying the nonobviousness determination). Indeed, in its seminal interpretation of Section 103 of the Patent Act in *Graham*, this Court not only discussed the factors relevant to the determination of obviousness without once mentioning a "suggestion test," it also reversed an appellate court's finding of nonobviousness despite the appellate court's conclusion that there was "nothing in the prior art suggesting [the] unique combination of these old features" in the claimed invention. *Graham*, 383 U.S. at 30. Thus, it would appear that the Federal Circuit's suggestion test would have led to the opposite result in *Graham* itself.

While the suggestion test is framed as a factual inquiry, it, unlike the factual inquiries laid out by this Court in *Graham*, essentially preempts the legal inquiry by focusing on what is already in the prior art, leaving scant space for legal and expert assessment. History and common sense teach that competition itself is an engine of innovation, propelling progress even without the incentives provided by patent rights. Yet the suggestion test answers the legal and policy questions of obviousness by imposing a uniformly low standard which is little more than a generalized novelty requirement.

III. The Suggestion Test Lowers the Nonobviousness Standard by Disregarding the Ordinary Problem-Solving Ability of the Skilled Artisan.

By replacing the legal inquiry into obviousness with a factual inquiry into motivation to combine, the suggestion test essentially swallows the obviousness inquiry. It obscures the importance of the factual inquiry into the level of ordinary *skill* in the art mandated by this Court and required by the statutory command to judge obviousness from the

perspective of the "person having ordinary skill in the art." As Professor Rebecca Eisenberg has noted:

> [The Federal Circuit] has all but ignored the statutory directive that judgments of nonobviousness be made from the perspective of the PHOSITA [person having ordinary skill in the art]. Today, PHOSITA sits on the sidelines of obviousness analysis. Courts consult PHOSITA on the scope, content, and meaning of prior art references but not on the ultimate question of whether the invention would have been obvious at the time it was made in light of the prior art.

Rebecca Eisenberg, *Obvious to Whom? Evaluating Inventions from the Perspective of PHOSITA*, 19 Berkeley Tech. L.J. 885, 888 (2004).

The Federal Circuit's analysis in this very case exemplifies the short shrift given to the person of ordinary skill in the art. The Federal Circuit stated that, besides explicit suggestions "in the prior art references," implicit suggestions to combine might be found "in the knowledge of those of ordinary skill in the art that certain references . . . are of special interest or importance in the field;" or "from the nature of the problem to be solved, leading inventors to look to references relating to possible solutions to that problem." Pet. App. at 6a. (Citations omitted). The District Court had based its finding of a suggestion or motivation to combine references in part on the "nature of the problem to be solved." Pet. App. at 42a-43a. The Federal Circuit rejected the District Court's findings because the "nature of the problem to be solved" provides a cognizable motivation to combine references only when "two prior art references address the precise problem that the patentee was trying to solve." Pet. App. at 12a. In this instance, the problems addressed by the references did not track the specifics of the patent at issue quite precisely enough. Pet. App. at 12a-13a.

Despite lip service to the inquiry into whether the nature of the problem would have "led a person of ordinary skill in the art to combine the prior art teachings in the particular manner claimed," Pet. App. at 12a, the Federal Circuit's analysis paid no attention to how such a person would have viewed the prior art references in light of the problem the *patentee* was trying to solve. There was apparently no room for the possibility that a person of ordinary skill in the art might find it obvious to apply prior art technology to a problem slightly different from the problem articulated in the prior art reference.

As applied in this case, the knowledge of those of ordinary skill in the art is used to help determine the scope and content of the applicable prior art, but there appears to be no room for the application of routine problem-solving skill. The nature of the problem similarly serves only to motivate a search for references addressing the specific problem at hand. This approach limits the role of the PHOSITA to that of a sort of reference librarian, who can locate appropriate prior art references but is apparently incapable of applying or recombining them with even a modicum of creativity in light of his or her knowledge and skill.

The suggestion test is not needed for selecting which references should be considered in assessing obviousness, however. The "scope and content of the prior art" is determined by the doctrine of analogous arts. *See, e.g.*, *In re Bigio*, 381 F.3d 1320 (Fed. Cir. 2004) ("Two separate tests define the scope of analogous prior art: (1) whether the art is from the same field of endeavor, regardless of the problem addressed and, (2) if the reference is not within the field of the inventor's endeavor, whether the reference still is reasonably pertinent to the particular problem with which the inventor is involved."). *See also Graham*, 383 U.S. at 35 ("The problems confronting Scoggin and the insecticide industry were not insecticide problems; they were mechanical closure problems. Closure devices in such a closely related art as

pouring spouts for liquid containers are at the very least pertinent references.") Once the scope and content of the prior art are determined, obviousness should be assessed by considering what advances an ordinarily skilled artisan could make based on that art, not by determining whether the references address the same problem as the invention under review.

Some recent Federal Circuit opinions have begun to suggest a broader view of the scope of implicit suggestions to combine prior art references. *See, e.g., Princeton Biochemicals, Inc. v. Beckman Coulter, Inc.*, 411 F.3d 1332 (Fed. Cir. 2005); *Ruiz v. A.B. Chance Co.*, 357 F.3d 1270 (Fed. Cir. 2004). The recent opinion in *In re Kahn*, 441 F.3d at 988, for example, states that "in considering motivation in the obviousness analysis, the problem examined is not the specific problem solved by the invention but the general problem that confronted the inventor before the invention was made." According to this recent take on the suggestion test:

> [t]he motivation-suggestion-teaching test asks not merely what the references disclose, but whether a person of ordinary skill in the art, possessed with the understandings and knowledge reflected in the prior art, and motivated by the general problem facing the inventor, would have been led to make the combination recited in the claims. From this it may be determined whether the overall disclosures, teachings, and suggestions of the prior art, and *the level of skill in the art—i.e., the understandings and knowledge of persons having ordinary skill in the art* at the time of the invention—support the legal conclusion of obviousness.

Id. (Emphasis added).

While this attempt to employ a broader version of the suggestion test is an improvement over the narrower version applied in many other cases, it still does not solve the underlying failings of the "suggestion test." Even here, in perhaps its broadest statement of the test to date, the Federal Circuit does not acknowledge that ordinary *skill* encompasses more than knowledge. The court explicitly equates "the level of skill in the art" with "understandings and knowledge." This equation ignores the part of ordinary skill comprising routine experimentation and application of ordinary tools, methods, and problem-solving abilities and continues to preempt the legal assessment of whether a particular advance was sufficient to warrant a patent by a factual inquiry into the content of the prior art.

"Trained scientists, engineers and other practitioners are seldom so dull-witted as to unvaryingly require the specific, step-by-step combination of elements from the prior art." John R. Thomas, *Formalism at the Federal Circuit,* 52 Am. U. L. Rev. 771, 802 (2003). As Professor Eisenberg has noted, "[a]ctive practitioners of a technology bring more to a problem than may be found in written prior art, including training, judgment, intuition, and tacit knowledge acquired through field experience. Scientific and technological work involve the application of craft skills that are familiar to practitioners but defy explicit articulation." Eisenberg, 19 Berkeley Tech. L.J., at 897, *citing* Jerome R. Ravetz, *Scientific Knowledge and its Social Problems* 75-76 (1971).

The Federal Trade Commission has also recognized the extent to which the suggestion test neglects the ordinary creativity of the PHOSITA:

> Inventive processes typically involve judgment, experience, and common sense capable of connecting some dots. The suggestion test, rigidly applied, assumes away a PHOSITA's typical levels of creativity and insight and

> supports findings of nonobviousness even when only a modicum of additional insight is needed. . . . The *presence* of 'specific and definitive art references with clear motivation of how to combine those references' may confirm the obviousness of an invention. In contrast, the *absence* of such prior art references does not provide any evidence about whether a PHOSITA could have combined prior art references to achieve the invention, given the typical level of insight in that field.

Federal Trade Commission, *To Promote Innovation: The Proper Balance of Competition and Patent Law and Policy*, Chap. 4, at 14 (2003). (Emphasis added.) As the FTC recognizes, the presence of a suggestion, teaching or motivation to combine prior art references demonstrates obviousness, but only consideration of whether the application of ordinary skill could have produced the claimed invention within a reasonable time frame can determine whether the invention meets the legal standard of non-obviousness.

The Federal Circuit's approach to the "nature of the problem" prong does not overcome the suggestion test's basic confusion of (a) the underlying factual inquiry into the relevant context in which the claimed invention was made with (b) the legal inquiry as to whether the associated advance over the prior art is sufficient to warrant a patent. The question whether the advance represented by the patent claims is sufficiently beyond what would result from routine research and development without the patent incentive is not a factual inquiry into whether the "nature of the problem to be solved" would motivate the invention.

The predominant role assigned to the suggestion test has had the effect of marginalizing the determination of the "level of ordinary skill in the art." This marginalization is evident from a reading of the case law. Often there is no

explicit consideration of the level of ordinary skill in the art at all. Even when it is nominally considered, the result is usually a recitation of a "resume of the person of ordinary skill in the art." Once this "resume" has been established, however, it rarely, if ever, plays any role in the substantive consideration of the obviousness issue. At the Federal Circuit's inception, it set out factors to be considered in determining the level of ordinary skill in the art in *Environmental Designs, Ltd. v. Union Oil Co.*, 713 F.2d 693, 696 (Fed. Cir. 1983), yet it has rarely discussed those factors in its opinions. *See* Joseph P. Meara, *Just Who is the Person Having Ordinary Skill in the Art? Patent Law's Mysterious Personage*, 77 Wash. L. Rev. 267, 278, 289 (2002) (noting that "[a]t the end of the year 2000, only five of the court's obviousness opinions cited the factors of *Environmental Designs*" and that in those "five subsequent nonobviousness opinions citing the factors of *Environmental Designs*, the Federal Circuit has provided little guidance for the use of the factors."). Indeed, the Federal Circuit appears not to have referred to the factors for determining the level of skill in the art at all since 2000.

In effect, the Federal Circuit's approach substitutes knowledge in the art—"the understandings and knowledge of persons having ordinary skill in the art at the time of the invention"—for skill in the art—the methods, tools, and problem-solving skills that are routinely applied in a particular field of technology. It substitutes factual questions about suggestions to combine the prior art for the legal determination of the sufficiency of the claimed advances in light of the prior art.

IV. The Federal Circuit's Suggestion Test Precludes Consideration of Relevant Social and Economic Factors Indicating Obviousness

In *Graham*, this Court recognized that certain "secondary considerations" "might be utilized to give light to the circumstances surrounding the origin of the subject matter sought to be patented." *Graham*, 383 U.S. at 17-18. *Graham* listed "commercial success, long felt but unsolved needs, failure of others, etc." as potentially relevant "indicia of *obviousness or nonobviousness*," (emphasis added), and explicitly anticipated a "case-by-case development" of the obviousness test. Contrary to that expectation, the Federal Circuit has frozen the inquiry into "the circumstances surrounding the origin of the subject matter sought to be patented" into a rigid list of "objective indicia of *nonobviousness*," *Orthopedic Equipment Co. v. All Orthopedic Appliances, Inc.*, 707 F.2d 1376, 1379, 1383 (Fed. Cir. 1983) (emphasis added) (equating "secondary considerations" with "objective indicia of nonobviousness"), which can only be used as a thumb on the nonobvious side of the scale. The threshold nature of the suggestion test turns the inquiry into contextual indications of "obviousness or nonobviousness" into a one-way ratchet which can only contribute to patent issuance. Without a "motivation to combine" in the prior art, a claimed invention is never deemed obvious, regardless of the circumstances surrounding its development. On the other hand, the Federal Circuit requires that "objective indicia of nonobviousness" be considered in every case—even when there is a finding of a motivation to combine. *Stratoflex, Inc. v. Aeroquip Corp.*, 713 F.2d 1530, 1538 (Fed. Cir. 1983) ("[E]vidence rising out of the so-called 'secondary considerations' must always when present be considered *en route* to a determination of obviousness.")

Recent experience suggests that there are additional contextual factors that should inform the obviousness inquiry. Social and economic developments may strongly evidence

the *obviousness* of particular advances. Circumstantial indications of obviousness might include technical advances within or outside of the particular field of the invention at issue that motivate the combination at hand. For example, the development of personal computers and the internet and other computing advances have given rise to numerous opportunities to make use of computers in ways that were obvious to those skilled in the art once the technology became available. Methodological advances in the biotechnology area have led to results that many have argued should not have been patentable due to the ease with which they could be achieved once the tools became available. As Professors Dan L. Burk and Mark Lemley remark, "the Federal Circuit has bent over backwards to find biotechnological inventions nonobvious, even if the prior art demonstrates a clear plan for producing the invention." *Is Patent Law Technology-Specific?*, 17 Berkeley Tech. L.J. 1155, 1156 (2002). Especially in fast-moving fields, nearly simultaneous development of the same advance by more than one party may indicate the obviousness of the advance even if there is a race to patent the result. (This will not always be the case, of course, since sometimes near-simultaneous development may be the result of patent-inspired investment solving a particular problem.) At a minimum, nearly concurrent development by others who do not race to patent the results is strong evidence that an advance was obvious.

Other social changes may give rise to or draw attention to a particular problem, the solution to which becomes obvious once attention is paid to it. A change in the law, for example, might give rise to a new possibility to combine prior technology in a commercially attractive way. *See* Jay Dratler, Jr., *Alice in Wonderland Meets the U.S. Patent System*, 38 Akron L. Rev. 299, 302 (2005) (arguing that the patent claims at issue in the case of *State Street Bank & Trust Co. v. Signature Financial Group, Inc.*, 149 F.3d 1368 (Fed. Cir. 1998), involved merely "pedestrian arithmetic calculations, mostly

as required by rules of the SEC and other accounting and tax authorities."); Richard H. Stern, *Scope-of-Protection Problems with Patents and Copyrights on Methods of Doing Business*, 10 Fordham Intell. Prop. Media & Ent. L.J. 105 (1999), App. A, (comparing the patent claims in *State Street Bank* with U.S. tax law concerning flow-through of pool income to a partner and avoidance of taxation of the pool entity and purporting to show that the claims merely track the applicable IRS regulations). Other social and cultural changes may have similar effects. *See, e.g., Scott & Williams v. Aristo Hosiery Co.*, 300 F. 622, 624-27 (D.N.Y. 1924) (L. Hand, J.) (concluding that a new stocking seam arrangement invented in response to changing consumer tastes was an unpatentable variation of prior art seams, notwithstanding its great commercial success), *aff'd* 7 F.2d 1003 (2d Cir. 1925).

Consideration of the way in which changing technological, social, or economic context can give rise to obvious combinations of prior technologies is in some sense the converse of the "long-felt need" indicator of nonobviousness. If a need has only recently arisen or become apparent, a solution may become obvious at around the same time. When the obviousness standard does not recognize this possibility, each social or technical development can lead to a "gold rush" of socially wasteful efforts to patent combinations of well-known technology in response to that development.

The rubric of inventive context also provides an appropriate place for the consideration of how old components of a new technology interact. This Court's most recent precedent on the subject of obviousness has been interpreted by some as setting out a special "synergy test" for interactions among components of so-called "combination patents." *See Sakraida v. Ag Pro, Inc.*, 425 U.S. 273, 282 (1976) ("We cannot agree that the combination of these old elements to produce an abrupt release of water directly on the barn floor from storage tanks or pools can properly be characterized as synergistic."); *Anderson's-Black Rock, Inc. v. Pavement*

Salvage Co., 396 U.S. 57, 61 (1969) ("A combination of elements may result in an effect greater than the sum of the several effects taken separately. No such synergistic result is argued here."), both citing *Great A&P Tea Co.*, 340 U.S. at 152, ("Courts should scrutinize combination patent claims with a care proportioned to the difficulty and improbability of finding invention in an assembly of old elements.")[2] A "synergy test" was rejected by the Federal Circuit and criticized by commentators because of the difficulty in differentiating combination patents from all others and the vagueness of the synergy concept. *See Stratoflex*, 713 F.2d at 1540 ("A requirement for "synergism" or a "synergistic effect" is nowhere found in the statute . . . synergism may point toward nonobviousness, but its absence has no place in evaluating the evidence on obviousness"); *Chore-Time Equipment, Inc. v. Cumberland Corp.*, 713 F.2d 774, 781 (Fed. Cir. 1983) ("References to synergism as a patentability requirement are, therefore, unnecessary and confusing.") *See also* Robert P. Merges, *Commercial Success and Patent Standards: Economic Perspectives on Innovation*, 76 Cal. L. Rev. 803, n. 39 (1988) (describing discontent with the synergy test). *Amici* do not advocate implementation of a "synergy test." However, the presence of unanticipated effects from the interactions among components of an invention may be evidence of nonobviousness. Conversely, the fact that a novel development consists only of a combination of prior art elements——each of which performs the same function as it did in prior art settings—may be evidence that the combination was an obvious one, perhaps motivated by some social change.

In sum, various contextual factors may have spurred the combination or extension of previously available technology in a way that would have been obvious to a person having

---

[2] See, however, Brief of Economists and Legal Historians filed in this case for a historical perspective on this Court's obviousness jurisprudence.

ordinary skill in the art in light of those factors. The Federal Circuit's suggestion test, combined with its narrow focus on "indicia of nonobviousness," ignores contextual indications of obviousness. This one-sided view of the inventive milieu leads to the issuance of patents on routine advances that result from applying ordinary inventive skill to changing circumstances.

V. The Suggestion Test is Not Reasonably Applicable by the PTO and Negates the Agency's Expertise

Besides the substantive failings detailed in the preceding sections, the Federal Circuit's approach fails to take advantage of the technical expertise of the examiner corps and arguably undermines the role of the PTO as a matter of administrative law. *See* Stuart Minor Benjamin and Arti K. Rai, *Who's Afraid of the APA? What the Patent System Can Learn from Administrative Law*, 95 Geo. L.J. (forthcoming 2006) (arguing that the Federal Circuit's approach to patent law is inconsistent with standard administrative law doctrines).[3] Moreover, the suggestion test is extremely difficult for the PTO to implement effectively. Though this particular case arises out of infringement litigation, it is important in crafting an approach to the obviousness issue to keep in mind that "the primary responsibility for sifting out unpatentable material lies in the Patent Office." *Graham*, 383 U.S. at 18. The inability of the PTO to weed out obvious patents under the Federal Circuit's suggestion test is extremely detrimental to the health of the patent system because, as this Court has recognized, "[t]o await litigation is—for all practical purposes—to debilitate the patent system." *Id.* The difficulty the PTO has in applying the suggestion test stems from the Federal Circuit's strict requirement that the patent examiner search for and present additional evidence in the record when the examiner seeks to rely on the knowledge of one skilled in

---

[3] It is our understanding that a copy of this article will be filed in this case by Professors Benjamin and Rai.

the art or the nature of the problem to be solved to demonstrate a suggestion to combine prior art references.

Federal Circuit precedent makes clear that patent examiners cannot rely on common knowledge in the art or on their own technical knowledge in the art as a basis for rejecting patent applications. *See, e.g., In re Lee*, 277 F.3d 1338, 1345 (Fed. Cir. 2002) ("'Common knowledge and common sense,' even if assumed to derive from the agency's expertise, do not substitute for authority when the law requires authority.") (Citation omitted). As a result, the Federal Circuit has forbidden the PTO to deny a patent based on common knowledge in the art unless the examiner can point to specific evidence of a teaching, suggestion, or motivation to combine the particular existing references and has limited the ability of the PTO to rely on official notice as it is generally conceived in the agency context. *See* Benjamin and Rai, 95 Geo. L.J. at __.

Excessively stringent evidentiary requirements and framing of the ultimate judgment of obviousness as essentially a factual inquiry hamper the PTO's application of its expertise to the obviousness question. Common knowledge is not often the subject of detailed written exposition, making it difficult and costly for the patent examiner to find evidence of common knowledge to meet the Federal Circuit's suggestion test. As the National Academy of Sciences recently explained in its report on the patent system: "[S]cientists, artisans, and creative people generally speaking strive to publish non-obvious information. So if it is obvious to those of skill in the art to combine references, it is unlikely that they will publish such information." Stephen A. Merrill et al., National Research Council, National Academy of Sciences, *A Patent System for the 21st Century* (2004) at 90.

Moreover, technological advances and expansive interpretations of the scope of patentable subject matter have resulted in the issuance of patents in areas, such as software and

business method patents, in which the common knowledge of the art has not traditionally been documented in easily accessible forms such as patents and academic publications. The Federal Circuit's emphasis on documentation of what is widely known in the art is particularly problematic for patenting in these areas. *See, e.g.*, Margo A. Bagley, *Internet Business Model Patents: Obvious by Analogy*, 7 Mich. Telecomm. & Tech. L. Rev. 253, 279-80 (2000-2001) (discussing the limited availability of documentary prior art in the areas of business methods and software). In attempting to find documentation of what is commonly known in the art, patent examiners must waste time and resources searching for specific articulations of common, but largely tacit, knowledge. This is particularly unfortunate since PTO examiners are selected and trained in the subject matter of the patents they examine and their duties naturally keep them up to date.

In sum, the Federal Circuit's obviousness test fails to take advantage of agency expertise and all but requires the PTO to base its analyses on documentary evidence of obviousness, which will often be difficult and costly to find or unavailable. The test will thus allow patents to issue in many cases where combining pre-existing technologies would have been an obvious step for a person having ordinary skill in the art.

VI. The Suggestion Test's Low Standard of Patentability is Bad Patent Policy

The low standard for patentability that results from application of the suggestion test leads inevitably to the grant of patent rights to combinations of existing technological knowledge for which no patent incentive was needed. Such patents not only do not "promote the Progress of . . . useful Arts," *see* U.S. Const., art. I, § 8, cl. 8, they have pernicious social effects. *Amici* are convinced that the suggestion test results in the issuance and enforcement of many such patents that should be declared invalid as obvious. *See, e.g.*, Glynn S. Lunney, Jr., *E-Obviousness*, 7 Mich. Telecomm. & Tech.

L. Rev. 363, 370-379 (2000) (presenting a statistical study showing a drop in Federal Circuit patent invalidations for obviousness, and identifying the Circuit's suggestion test as one of the causes).

The availability of patents on obvious combinations overwhelms the Patent and Trademark Office with applications for patents on obvious combinations of previously existing technologies, promotes socially wasteful races to patent these obvious advances, and raises patent search costs for those seeking to combine existing technologies. *See, e.g.*, Bronwyn H. Hall and Dietmar Harhoff, *Post-Grant Reviews in the U.S. Patent System—Design Choices and Expected Impact*, 19 Berkeley Tech. L.J. 989, 992-1000 (2004) (discussing potential problems caused by low quality patents, presenting evidence of issuance of lower quality patents by the PTO, and relating the issuance of lower quality patents to the suggestion test for obviousness).

The overpatenting that results from the Federal Circuit's suggestion test creates an unnecessary drag on innovation through higher prices to consumers and transaction costs associated with searching for, licensing, and enforcing these unnecessary patents. Those interested only in combining existing technologies in obvious ways must nonetheless expend resources searching for possible patents on those obvious combinations. Anyone who wants to use an unnecessarily patented combination of technologies will have to negotiate permission from and pay royalties to the owners of any patents on the individual elements, and to the owner of the patent in the combination. The costs of patents that are unnecessary to promote innovation also include "the benefits lost when a course of research is foregone out of fear that a product cannot be produced without obtaining a license that may be unavailable. Even when a product is produced, there may be costs in restructuring a research program to design around existing patents." Barton, 43 IDEA at 475, 494. When two or more parties can block the practical application

of technology, the difficulty and social cost of developing that practical application increases significantly, raising the likelihood of "patent thickets." *See, e.g.*, Carl Shapiro, *Navigating the Patent Thicket: Cross Licensing, Patent Pools, and Standard Setting*, in *Innovation Policy and the Economy* (Adam Jaffe et al., eds., 2001); *see also* Michael A. Heller & Rebecca S. Eisenberg, *Can Patents Deter Innovation? The Anticommons in Biomedical Research*, Science, May 1, 1998, at 698-99.

The low threshold of nonobviousness promotes undesirable business practices. It provides incentives to invest in socially wasteful efforts to patent run-of-the-mill combinations of previously known technologies and makes it easier to "trap" competitors in inadvertent infringement, thus motivating the "patent troll" business model. It also motivates the practice of "evergreening"—using minor improvement patents to retain control over a technology (such as a drug) that would otherwise go into the public domain. In addition, it motivates true innovators to divert some of their resources away from further technical advancement and toward identifying and claiming all possible combinations of their new technologies with existing technologies in order to prevent others from getting patents that would block important and obvious applications of their technologies.

The predictable result of the availability of patents on obvious combinations of existing elements is that it becomes more difficult to bring the benefits of technology to society, thus undermining the ultimate goal of patent law.

VII. This Court Should Mandate a Return to the *Graham* Approach, Asking Whether the Claimed Invention Could Be Made By Routine Application of the Level of Ordinary Skill in the Art

The perspective of the "person of ordinary skill in the art" must be brought back to its rightful place in the legal inquiry into obviousness. While the occasional appearance in

Federal Circuit opinions of more leeway for suggestions stemming from the "nature of the problem" is an improvement over the strict approach evident in this case, it is not a solution. The expansion of the "nature of the problem to be solved" prong hides a legal decision within a supposed question of fact and masks an inadequate determination of the level of skill in the art. Especially when a thorough investigation of the level of skill in the art is not made, expanded use of the "nature of the problem" prong also invites a back-door re-entry of hindsight bias because it is most likely to be applied to simpler technologies where the connection of the nature of the problem to be solved to the claimed invention is most apparent to courts.

The presence of a "teaching, suggestion, or motivation to combine" prior art references evidences obviousness, but the absence of such a suggestion to combine is not an appropriate test for nonobviousness. This Court should require a return to the inquiry set out in *Graham*. The analogous arts doctrine provides a methodology for determining the scope and content of the prior art which—especially if updated to allow for progress in search technology and the increasing importance of interdisciplinary research and development teams—is entirely adequate for the task. A robust inquiry into the level of ordinary skill in the art would set the stage for a legal determination of whether the application of that ordinary skill to the problem at hand would have led to the claimed solution in the course of baseline competition.

The factual determination of the level of ordinary skill in the art should not be limited to the content of prior art references, the common knowledge of those in the art, and any suggestions to combine the art that are found in those references or knowledge. It should also encompass the PHOSITA's ordinary inventive skills, the tools and methods routinely applied in her field, and the kinds of experimentation she does and problems she solves as a matter of course. As with the determination of analogous arts, the determination of level of ordinary skill should evolve with the technology itself, incorporating, for example, the extent to which

research and development in a particular field routinely draws on interdisciplinary teams.

Once a more complete picture of the ordinary skill in the art is drawn, the legal inquiry as to obviousness can proceed to determine "if the difference between the new thing and what was known before is not considered sufficiently great to warrant a patent." Because a serious inquiry into the level of skill in the art would incorporate not only what is already known in a particular field, but also what is routinely invented, it would naturally incorporate technological differences in the competitive baseline. An obviousness standard that takes into account the routine experimentation and problem-solving skill of the PHOSITA is also self-correcting to some extent. If a more stringent patentability standard reduces the baseline progress in a particular field, a patentability standard based on the routine level of skill and progress in the field will adjust so that more patents are issued.

With the *Graham* paradigm reinstated, the consideration given to the technical and social context in which a claimed invention was made should expand to incorporate not only factors—such as long-felt need—evidencing nonobviousness, but also factors—such as a newly appreciated need or a recent technological development—suggesting the obviousness of a claimed invention.

All obviousness tests are susceptible to two types of error—erroneous issuance and erroneous rejection. Both types are socially costly. The Federal Circuit's suggestion test bends over backwards to prevent hindsight (and hence prevent the rejection of patents that should have issued), but does little to prevent unwarranted patent issuance. The *Graham* approach, on the other hand, mitigates the risk of either form of error—avoiding hindsight with its structured inquiry into the factual context at the time of invention, while protecting against the issuance of patents on routine advances with a robust inquiry into the level of ordinary skill in the art

and the inventive context. The *Graham* approach better serves the public welfare.

CONCLUSION

For the foregoing reasons, the Court should set a standard for the obviousness determination that prevents the patenting of numerous advances that would have occurred as a result of routine development, returns the focus to the problem-solving capability of the person having ordinary skill in the art, accommodates contextual evidence of obviousness as well as nonobviousness, and makes room for the application of USPTO expertise.

Respectfully submitted,

KATHERINE J. STRANDBURG*
Associate Professor
DEPAUL UNIVERSITY
COLLEGE OF LAW
25 East Jackson Boulevard
Chicago, IL 60604
(312) 362-8536

* *Counsel of Record for Amici Curiae*

JOSEPH SCOTT MILLER
Associate Professor
LEWIS & CLARK LAW
SCHOOL
10015 S.W. Terwilliger Blvd.
Portland, OR 97219
(503) 768-6600

MICHAEL A. CARRIER
Professor of Law
RUTGERS LAW SCHOOL –
CAMDEN
217 North Fifth Street
Camden, NJ 08102

THOMAS F. COTTER
Professor of Law
UNIVERSITY OF MINNESOTA
LAW SCHOOL
229 19th Avenue South
Minneapolis, MN 55455

ROCHELLE COOPER
DREYFUSS
Pauline Newman Professor
of Law
NEW YORK UNIVERSITY
SCHOOL OF LAW
40 Washington Square South
New York, NY 1001

STACEY L. DOGAN
Professor of Law
NORTHEASTERN UNIVERSITY
SCHOOL OF LAW
400 Huntington Avenue,
Boston, MA 02115

CHRISTINE HAIGHT FARLEY
Professor of Law
AMERICAN UNIVERSITY
WASHINGTON COLLEGE OF
LAW
4801 Massachusetts Avenue
N.W.
Washington, DC 20016

EILEEN KANE
Associate Professor
PENN STATE DICKINSON
SCHOOL OF LAW
150 South College St.
Carlisle, PA 17013

MARY LAFRANCE
William S. Boyd Professorof
Law
WILLIAM S. BOYD SCHOOL
OF LAW
University of Nevada, Las
Vegas
Las Vegas, NV 89154

MARK P. MCKENNA
Assistant Professor of Law
SAINT LOUIS UNIVERSITY
3700 Lindell Blvd.
St. Louis, MO 63108

MALLA POLLACK
Professor
AMERICAN JUSTICE SCHOOL
OF LAW
2000 McCracken Blvd
Paducah, KY 42001

MATTHEW SAG
Assistant Professor
DE PAUL UNIVERSITY
COLLEGE OF LAW
25 East Jackson Boulevard
Chicago, IL 60604

PAMELA SAMUELSON
Richard M. Sherman
Distinguished Professor of
Law
BOALT HALL SCHOOL OF
LAW, UNIVERSITY OF
CALIFORNIA, BERKELEY
Berkeley, CA 94720

JOHN R. THOMAS
Professor of Law
GEORGETOWN UNIVERSITY
600 New Jersey Avenue,
NW
Washington, DC 2000

9540

(19)

No. 04-1350

Supreme Court, U.S.
FILED
OCT 12 2006
OFFICE OF THE CLERK

IN THE

Supreme Court of the United States

KSR INTERNATIONAL CO.
Petitioner,

v.

TELEFLEX INC. AND TECHNOLOGY HOLDING CO.
Respondents.

On Writ of Certiorari to the United States Court of Appeals for the Federal Circuit

---

BRIEF OF *AMICUS CURIAE* INTELLECTUAL PROPERTY OWNERS ASSOCIATION IN SUPPORT OF THE RESPONDENTS

Of Counsel:

MARC S. ADLER
President
RICHARD F. PHILLIPS
Chair, Amicus Brief Committee
INTELLECTUAL PROPERTY OWNERS ASSOCIATION
1255 Twenty-Third Street, N.W.
Suite 200
Washington, D.C. 20037
(202) 466-2396

PAUL H. BERGHOFF
(*Counsel of Record*)
JEREMY E. NOE
AARON F. BARKOFF
MCDONNELL BOEHNEN HULBERT & BERGHOFF LLP
300 South Wacker Drive
Chicago, Illinois 60606
(312) 913-0001

Counsel for Amicus Curiae

WILSON-EPES PRINTING CO., INC. – (202) 789-0096 – WASHINGTON, D.C. 20001

TABLE OF CONTENTS

	Page
TABLE OF AUTHORITIES	ii
INTEREST OF *AMICUS CURIAE*	1
SUMMARY OF ARGUMENT	2
ARGUMENT	3
I. THE FEDERAL CIRCUIT'S "TEACHING, SUGGESTION, OR MOTIVATION" TEST IS CONSISTENT WITH § 103 AND THIS COURT'S PRECEDENTS	3
II. THE SUGGESTION TEST IS AN OBJECTIVE TEST THAT IS RELATIVELY EASILY AND CONSISTENTLY APPLIED IN PRACTICE	7
III. A FLEXIBLE STANDARD SHOULD GUIDE THE APPLICATION OF THE SUGGESTION TEST	9
IV. NEITHER "SYNERGISM" NOR "EXTRA-ORDINARY LEVEL OF INNOVATION" SHOULD BE A REQUIRED ELEMENT OF NONOBVIOUSNESS	12
CONCLUSION	15
APPENDIX	1a

TABLE OF AUTHORITIES

CASES	Page
ACS Hosp. Sys., Inc. v. Montefiore Hosp., 732 F.2d 1572 (Fed. Cir. 1984)	8
Alza Corp. v. Mylan Labs., Inc., No. 06-1019 (Fed. Cir. Sept. 6, 2006)	10
American Hoist & Derrick Co. v. Sowa & Sons, Inc., 725 F.2d 1350 (Fed. Cir 1984)	14
Anderson's-Black Rock, Inc. v. Pavement Salvage Co., 396 U.S. 57 (1969)	12, 13
Bonito Boats, Inc. v. Thunder Craft Boats, Inc, 489 U.S. 141 (1989)	6-7
Brown & Williamson Tobacco Corp. v. Phillip Morris Inc., 229 F.3d 1120 (Fed. Cir. 2000)	11
Champion Spark Plug Co. v. Gyromat Corp., 603 F.2d 361 (2d Cir. 1979)	13
Cross Med. Prods., Inc. v. Medtronic Sofamor Danek, Inc., 424 F.3d 1293 (Fed. Cir. 2005)	10, 11
Cuno Corp. v. Automatic Devices Corp., 314 U.S. 84 (1941)	14
Dann v. Johnston, 425 U.S. 219 (1976)	13
Dystar Textilfarben GmbH v. C.H. Patrick Co., No. 06-1088, slip op. at 23-25 (Fed. Cir. Oct. 3, 2006)	7
Graham v. John Deere Co. of Kansas City, 383 U.S. 1 (1966)	4, 6
Hotchkiss v. Greenwood, 52 U.S. (11 How.) 248 (1851)	14
In re Dembiczak, 175 F.3d 994 (Fed. Cir. 1999)	12
In re Johnston, 435 F.3d 1381 (Fed. Cir. 2006)	3, 11
In re Kahn, 441 F.3d 977 (Fed. Cir. 2006)	9
In re Kotzab, 217 F.3d 1365 (Fed. Cir. 2000)	3, 6
In re Lee, 277 F.3d 1338 (Fed. Cir. 2000)	12
In re Rouffet, 149 F.3d 1350 (Fed. Cir. 1998)	12
In re Shaffer, 229 F.2d 476 (C.C.P.A. 1956)	8

TABLE OF AUTHORITIES—Continued

	Page
McGinley v. Franklin Sports, Inc., 262 F.3d 1339 (Fed. Cir. 2001)	6
Nickola v. Peterson, 580 F.2d 898 (6th Cir. 1978)	13
Ormco Corp. v. Align Tech., Inc., No. 05-1426 (Fed. Cir. Aug. 30, 2006)	10
Princeton Biochemicals, Inc. v. Beckman Coulter, Inc., 411 F.3d 1332 (Fed. Cir. 2005)	11
Rengo Co. Ltd. v. Molins Mach. Co., Inc., 657 F.2d 535 (3d Cir. 1981)	13
Republic Indus., Inc. v. Schlage Lock Co., 592 F.2d 963 (7th Cir. 1979)	13
Ruiz v. A.B. Chance Co., 357 F.3d 1270 (Fed. Cir. 2004)	11
Ryko Mfg. Co. v. Nu-Star, Inc., 950 F.2d 714 (Fed. Cir. 1991)	14
Sakraida v. Ag Pro, Inc., 425 U.S. 273 (1976)	12, 13
SIBIA Neurosciences, Inc. v. Cadus Pharm. Corp., 225 F.3d 1349 (Fed. Cir. 2000)	11
Stevenson v. Int'l Trade Comm'n, 612 F.2d 546 (C.C.P.A. 1979)	13
Winner Int'l Royalty Corp. v. Wang, 202 F.3d 1340 (Fed. Cir. 2000)	12
STATUTES	
35 U.S.C. § 103(a)	*passim*
35 U.S.C. § 282	8
OTHER AUTHORITIES	
Robert L. Harmon, *Patents and the Federal Circuit* (7th ed. 2005)	5

TABLE OF AUTHORITIES—Continued

	Page
Lee Peterbridge and R. Polk Wagner, *The Federal Circuit and Patentability: An Empirical Assessment of the Law of Obviousness*, U. Penn. Law School, Scholarship at Penn Law (Paper 103, August 18, 2006), at http://lsr.nellco.org/upenn/wps/papers/103	8
Giles S. Rich, *Principles of Patentability*, 28 Geo. Wash. L. Rev. 393 (1960)	14
H.R. Rep. No. 82-1923 (1952)	8, 15
S. Rep. No. 82-1979 (1952)	8, 15

IN THE

Supreme Court of the United States

No. 04-1350

KSR INTERNATIONAL CO.

Petitioner,

v.

TELEFLEX INC. AND TECHNOLOGY HOLDING CO.

Respondents.

On Writ of Certiorari to the United States Court of Appeals for the Federal Circuit

BRIEF OF *AMICUS CURIAE* INTELLECTUAL PROPERTY OWNERS ASSOCIATION IN SUPPORT OF THE RESPONDENTS

INTEREST OF *AMICUS CURIAE*[1]

Amicus curiae Intellectual Property Owners Association ("IPO") is a trade association with about 200 corporate members and a total of more than 9,000 individuals who are involved in the association either through their companies or

[1] The parties have consented to the filing of this brief *amicus curiae*. Letters of consent have been filed with the Clerk of the Court. In accordance with Supreme Court Rule 37.6, *amicus curiae* states that this brief was not authored, in whole or in part, by counsel to a party, and that no monetary contribution to the preparation or submission of this brief was made by any person or entity other than the *amicus curiae* or its counsel.

as inventor, executive, attorney or law firm members. Founded in 1972, IPO represents the interests of all owners of intellectual property. IPO members receive about thirty percent of the patents issued by the Patent and Trademark Office ("PTO") to U.S. nationals. IPO regularly represents the interests of its members before Congress and the PTO, and has filed *amicus curiae* briefs in this Court and other courts on significant issues of intellectual property law. The members of IPO's Board of Directors, which approved the filing of this brief, are listed in the Appendix.

SUMMARY OF ARGUMENT

IPO's interest in this case arises from the indication that this case may be used as a vehicle for overturning the Federal Circuit's established "teaching, suggestion, or motivation" test of obviousness under 35 U.S.C. § 103(a) (referred to herein as the "suggestion test"). The suggestion test states that a legal conclusion of obviousness based on multiple prior art references requires evidence of a "teaching, suggestion, or motivation" to combine those multiple references.

IPO believes that the suggestion test, if flexibly applied, is consistent with the statutory language of § 103(a) and this Court's precedents in that it guards against an improper reliance on hindsight in the obviousness analysis. The suggestion test asks the question that a person having ordinary skill in the art would ask at the time of the invention—should I combine the teachings of these prior art references and, if so, in what way? Furthermore, the suggestion test is an objective test that may be applied with relative ease and consistency by both patent examiners and judges. Abandonment of the suggestion test would likely make the determination of patentability and patent validity more subjective, and therefore less predictable. However, IPO believes that a rigid application of the suggestion test to require an explicit suggestion, motivation or teaching in the

prior art to combine references, as applied by the Federal Circuit in some cases, is not appropriate.

IPO expressly declines to take any position on whether there is a factual or legal basis for finding Respondents' patent invalid.

ARGUMENT

I. THE FEDERAL CIRCUIT'S "TEACHING, SUGGESTION, OR MOTIVATION" TEST, IF FLEXIBLY APPLIED, IS CONSISTENT WITH § 103(a) AND THIS COURT'S PRECEDENTS

In most instances, a determination of obviousness under section 103(a) is based on a combination of two or more separate prior art references. According to Federal Circuit case law, a legal conclusion of obviousness based on multiple prior art references requires evidence of a "teaching, suggestion, or motivation" to combine the multiple references. *See In re Johnston*, 435 F.3d 1381, 1384 (Fed. Cir. 2006). While the Federal Circuit has not always been consistent in applying the suggestion test, the Federal Circuit has stated that a flexible standard should be used. Specifically, the Federal Circuit has stated that "the teaching, motivation or suggestion may be implicit from the prior art as a whole, rather than expressly stated in the references." *In re Kotzab*, 217 F.3d 1365, 1370 (Fed. Cir. 2000). IPO believes that such a flexibly applied suggestion test is consistent with the statutory language of § 103(a) and this Court's precedents. IPO does not, however, support a wooden application of the suggestion test that would require an express suggestion, teaching, or motivation to combine references in the prior art.

35 U.S.C. § 103(a) states:

> A patent may not be obtained though the invention is not identically disclosed or described as set forth in section 102 of this title, if the differences between the subject matter sought to be patented and the prior art are such

> that the subject matter *as a whole* would have been obvious at the time the invention was made to a person having ordinary skill in the art to which said subject matter pertains.

35 U.S.C. § 103(a) (emphasis added). Thus, section 103(a) requires an evaluation of whether the subject matter of the invention "as a whole" would have been obvious. The statutory analysis is not whether each part or element of the invention would have been obvious, but whether the combination "as a whole" would have been so.

In interpreting § 103(a), this Court in *Graham v. John Deere* established the framework for determining obviousness:

> (1) the scope and content of the prior art are to be determined; (2) differences between the prior art and the claims at issue are to be ascertained; and (3) the level of ordinary skill in the pertinent art resolved. Against this background, the obviousness or nonobviousness of the subject matter is determined. Such secondary considerations as commercial success, long felt but unsolved needs, failure of others, etc., might be utilized to give light to the circumstances surrounding the origin of the subject matter sought to be patented. As indicia of obviousness or nonobviousness, these inquiries may have relevancy.

Graham v. John Deere Co. of Kansas City, 383 U.S. 1, 17-18 (1966).[2]

The Federal Circuit's suggestion test, if applied flexibly, ensures adherence to the statute's mandate that the patented subject matter be judged "as a whole" in determining obvi-

---

[2] The particular obviousness determinations at issue in *Graham* did not involve combinations of multiple prior art references. Accordingly, the *Graham* Court did not address the issue of how combinations of prior art references may render an invention obvious.

ousness. This statutory goal is accomplished by requiring evidence of a "teaching, suggestion, or motivation" to combine multiple prior art references prior to rendering the patented combination of elements obvious. Without this requirement, it would be easy to fall into the trap of hindsight and use the invention as a roadmap to pick and choose the various components of the invention out of the prior art. As one commentator put it, "[i]f identification of each claimed element in the prior art were sufficient to negate patentability, very few patents would ever issue." Robert L. Harmon, *Patents and the Federal Circuit* § 4.7(a), at 211 (7th ed. 2005).

Once the details of the inventor's solution to a problem in a particular art area have been explained, it can be tempting to conclude that the inventor's work product was "obvious" because, with the inventor's solution in hand, it is often easy to trace a pathway from the invention backwards to the prior knowledge and understanding of those of ordinary skill in the art. But this type of hindsight analysis is decidedly *not* the proper framework for determining obviousness under section 103(a). Instead, the court or the PTO must consider the prior art from the standpoint of one of ordinary skill in the art at the time of the invention, i.e., devoid of any knowledge regarding the invention or its description in the patent or patent application at issue. Only in that context can it be properly determined whether the patented subject matter would have been obvious to one of ordinary skill in the art at that time, as opposed to being obvious today.

Congress addressed the hindsight problem in § 103(a) by requiring that obviousness be assessed "at the time the invention was made." 35 U.S.C. § 103(a). Accordingly, the *Graham* court emphasized the importance of avoiding the hindsight trap. In determining whether it would have been obvious to one of ordinary skill in the art to combine reference teachings in a manner that would produce a particular

claimed invention, courts must "guard against slipping into the use of hindsight [and] . . . resist the temptation to read into the prior art the teachings of the invention at issue." *Graham*, 383 U.S. at 36 (internal quotations and citations omitted). *See also In re Kotzab*, 217 F.3d 1365, 1369 (Fed. Cir. 2000) ("[T]he very ease with which the invention can be understood may prompt one to fall victim to the insidious effect of a hindsight syndrome wherein that which only the invention taught is used against its teacher." (internal quotations omitted)). Looking for evidence of a teaching, suggestion, or motivation to combine particular portions of multiple references to arrive at the claimed invention serves as an important and practical check on the improper use of hindsight in obviousness determinations.

The suggestion test is correctly viewed as a part of the first *Graham* factor, determination of the scope and content of the prior art. However, the assessment of whether a "teaching, suggestion, or motivation" to combine prior art references exists also requires attention to the other *Graham* factors. For example, the level of skill in the art may influence whether the person of ordinary skill in the art would recognize a suggestion or motivation to combine prior art references. More highly skilled artisans are likely to have a greater appreciation for nuances in the art. Similarly, appreciation of the differences between the prior art and the claims at issue affects whether prior art references would have been combined by the person of ordinary skill. *See McGinley v. Franklin Sports, Inc.*, 262 F.3d 1339, 1351-52 (Fed. Cir. 2001).

Moreover, the search for evidence of a "teaching, suggestion, or motivation" to combine prior art references is consistent with *Graham* and this Court's other precedents insofar as it allows courts to determine whether the invention "could readily be deduced from publicly available material by a person of ordinary skill in the pertinent field of endeavor." *Bonito Boats, Inc. v. Thunder Craft Boats, Inc.*, 489 U.S. 141,

151 (1989). *See also, Dystar Textilfarben GmbH v. C.H. Patrick Co.*, No. 06-1088, slip op. at 23-25 (Fed. Cir. Oct. 3, 2006). The suggestion test poses the very question that a person of ordinary skill in the art would ask when faced with multiple prior art references, i.e., is there a reason to combine the teachings of these references and, if so, how? And the Federal Circuit's suggestion test poses this central question without reference to the teachings of the patent, just the position the hypothetical person having ordinary skill in the art would find himself or herself in at the time of the invention. As such, the suggestion test is a logical consequence of the statute's evaluation of obviousness "as a whole."

The suggestion test, when flexibly applied, also allows for consideration of questions that naturally arise when the analytical framework set forth in *Graham* is applied to a combination of prior art references. For example, an inherent aspect of the first two *Graham* factors is a consideration of the predictability of the result of combining the claimed combination of elements. Certain inventions comprising combinations of elements may lead to relatively predictable results, such as the technology at issue in this case, and thus may require less evidence to show that the patented combination would have been obvious from the prior art. Conversely, inventions comprising combinations of elements with results that are inherently less predictable may require a greater quantum of evidence of a suggestion to combine pertinent art.

II. THE SUGGESTION TEST IS AN OBJECTIVE TEST THAT IS RELATIVELY EASILY AND CONSISTENTLY APPLIED IN PRACTICE

In determining what would have been obvious to one of ordinary skill at the time of the invention, IPO submits that there should be an objective standard by which to make the determination. In IPO's view, the suggestion test is an

appropriate objective standard. Any finding of obviousness should be evidenced by a teaching, suggestion, or motivation that would have led a person of ordinary skill in the art to select those references and combine them in a manner that would produce the claimed subject matter at issue. However, it must be objective evidence, not mere unsupported opinion or argument.[3] Otherwise, the inevitable use of hindsight will tend to render meritorious inventions "obvious" by using the inventor's own teachings as a roadmap to piece together prior art references in ways that would not have been obvious at the time of the invention.

IPO believes that the suggestion test has proven itself to be a workable and statutorily relevant framework for addressing obviousness based on a combination of prior art references. This test has guided the Federal Circuit since its early years, *see, e.g., ACS Hosp. Sys., Inc. v. Montefiore Hosp.*, 732 F.2d 1572, 1577 (Fed. Cir. 1984), and informed the decisions of its predecessor court, *see, e.g., In re Shaffer*, 229 F.2d 476, 479 (C.C.P.A. 1956). As such, the test has provided the kind of uniformity and predictability that motivated Congress to enact the nonobviousness requirement of § 103(a). *See* S. Rep. No. 82-1979, at 6 (1952); H.R. Rep. No. 82-1923, at 7 (1952). A recent empirical analysis of the Federal Circuit's obviousness doctrine supports this view. Lee Peterbridge and R. Polk Wagner, *The Federal Circuit and Patentability: An Empirical Assessment of the Law of Obviousness*, U. Penn. Law School Scholarship at Penn Law (August 18, 2006), at http://lsr.nellco.org/upenn/wps/ papers/103 (concluding, for example, that the Federal Circuit has affirmed lower court decisions on the question of obviousness at least three times as often as it has reversed such decisions).

---

[3] And in the case of an issued patent that enjoys the presumption of validity under 35 U.S.C. § 282, obviousness must be proven by clear and convincing evidence.

The suggestion test is important for ensuring consistency not only in judicial decisions regarding obviousness, but also in patentability decisions at the PTO. Without the objectivity of the suggestion test, courts and patent examiners would have insufficient guidance to prevent them from declaring inventions "obvious" based on the almost irresistible pull of 20/20 hindsight. Leaving obviousness determinations to the mercy of hindsight reconstruction would be clearly at odds with the statute and this Court's precedents. In addition, the elimination of the suggestion test would lead to more subjective and less predictable obviousness determinations.

III. A FLEXIBILE STANDARD SHOULD GUIDE THE APPLICATION OF THE SUGGESTION TEST

IPO believes that a flexible standard should guide the evaluation of whether there exists a teaching, suggestion, or motivation to combine references. To the extent that the Federal Circuit has stated or would require that there must be express, written evidence in the prior art of such a teaching, suggestion, or motivation to combine, IPO believes that this would represent an overly rigid standard. The underlying evidentiary basis need not take the form of an express writing.

Indeed, the Federal Circuit recently decided a number of cases by applying the suggestion test with a flexible standard. The court in *In re Kahn* affirmed a Board of Patent Appeals and Interferences obviousness determination because the nature of the problem solved by the invention provided a motivation to combine prior art references. *In re Kahn*, 441 F.3d 977, 989 (Fed. Cir. 2006). The court stated: "A suggestion, teaching, or motivation to combine the relevant prior art teachings does not have to be found explicitly in the prior art, as the teaching, motivation, or suggestion may be implicit from the prior art as a whole, rather than expressly

stated in the references." *Id.* at 987. Similarly, the court in *Cross Medical* vacated a summary judgment determination of nonobviousness because there was a genuine issue of material fact as to whether a person of ordinary skill in the art would have been motivated to combine prior art references based on the general knowledge of those of ordinary skill in the art. *Cross Med. Prods. Inc. v. Medtronic Sofamor Danek, Inc.*, 424 F.3d 1293, 1322 (Fed. Cir. 2005). According to the court: "Evidence that a person of ordinary skill in the art recognized the same problem to be solved as the inventor and suggested a solution is, at the least, probative of a person of ordinary skill in the art's willingness to search the prior art in the same field for a suggestion on how to solve that problem." *Id.*

More recently, the Federal Circuit reversed a summary judgment of nonobviousness in *Ormco Corp. v. Align Tech., Inc.*, No. 05-1426 (Fed. Cir. Aug. 30, 2006), which involved a set of orthodontic devices that were packaged together with instructions for use. In finding that the claim limitation to packaging did not make the claimed combination nonobvious, the court applied the suggestion test in a flexible manner by finding a motivation to alter the prior art "in the light of the well-known practice of packaging items in the manner most convenient to the purchaser." *Id.*, slip op. at 16. And as to the claimed element of providing instructions for use of the orthodontic devices, the Federal Circuit found that the FDA's general regulations concerning medical devices "supply ample evidence of a motivation to provide instructions as to how to use the devices." *Id.*

In similar fashion, the Federal Circuit affirmed a finding of obviousness principally on the basis of expert testimony in *Alza Corp. v. Mylan Laboratories, Inc.*, No. 06-1019 (Fed. Cir. Sept. 6, 2006). According to the defendants' expert, one of ordinary skill in the art would have expected an extended release formulation of oxybutynin, the claimed invention, to

be of therapeutic value because oxybutynin was known to be lipophilic. The Federal Circuit found this testimony a sufficient basis for the lower court's finding of obviousness because "the motivation to combine need not be found in the prior art." *Id.*, slip op. at 12 (citing *Cross Med. Prods.*, 424 F.3d at 1322).

Prior Federal Circuit decisions likewise recognize that an obviousness finding does not require an express, written teaching, suggestion, or motivation to combine multiple references. *See, e.g., In re Johnston*, 435 F.3d at 1385 ("An explicit teaching that identifies and selects elements from different sources and states that they should be combined in the same way as in the invention at issue, is rarely found in the prior art."). *See also Ruiz v. A.B. Chance Co.*, 357 F.3d 1270, 1276 (Fed. Cir. 2004) (Federal Circuit's warning against employing hindsight "does not provide a rule of law that an express, written motivation to combine must appear in prior art references before a finding of obviousness."). Indeed the Federal Circuit has formulated and applied a flexible evidence standard in many of its prior obviousness decisions. *See, e.g., Brown & Williamson Tobacco Corp. v. Philip Morris Inc.*, 229 F.3d 1120, 1125 (Fed. Cir. 2000) (evidence of a motivation to combine prior art references "may flow from the prior art references themselves, the knowledge of one of ordinary skill in the art, or, in some cases, from the nature of the problem to be solved."). *See also Princeton Biochemicals, Inc. v. Beckman Coulter, Inc.*, 411 F.3d 1332, 1338 (Fed. Cir. 2005) (nature of the problem supplied motivation to combine prior art references); *SIBIA Neurosciences, Inc. v. Cadus Pharm. Corp.*, 225 F.3d 1349, 1356 (Fed. Cir. 2000) (motivation to combine references found in knowledge of those skilled in the art at the time of the invention). IPO supports this flexible application of the suggestion test.

IPO does not support the rigid application of the suggestion test that has been applied by the Federal Circuit in some of its decisions. The Federal Circuit has at times required evidence of an explicit suggestion to combine references without considering whether such a suggestion could be implicit in the knowledge of those of skill in the art. *See Winner Int'l Royalty Corp. v. Wang*, 202 F.3d 1340, 1348-1349 (Fed. Cir. 2000); *In re Rouffet*, 149 F.3d 1350, 1357 (Fed. Cir. 1998); *In re Lee*, 277 F.3d 1338, 1344-1345 (Fed. Cir. 2000). Perhaps the most egregious example of this was *In re Dembiczak*, in which the Federal Circuit found a lawn trash bag with a Halloween pumpkin design nonobvious due to the lack of an explicit teaching in the prior art that would have led one of ordinary skill in the art to combine a regular trash bag with prior paper bags having pumpkin designs. 175 F.3d 994, 1000 (Fed. Cir. 1999). IPO does not believe that an explicit suggestion to combine prior art references should be a necessary element of nonobviousness.

IV. NEITHER "SYNERGISM" NOR "EXTRAORDINARY LEVEL OF INNOVATION" SHOULD BE A REQUIRED ELEMENT OF NONOBVIOUSNESS

It is IPO's view that "synergism" should not be established as a necessary indicium of nonobviousness. IPO believes that *Anderson's-Black Rock* and *Sakraida* are entirely consistent with the analytical framework of *Graham*, and that neither case requires that combined elements take on novel, synergistic, or surprising functions. *Anderson's-Black Rock, Inc. v. Pavement Salvage Co.*, 396 U.S. 57 (1969), *Sakraida v. Ag Pro, Inc.*, 425 U.S. 273 (1976).

Both cases state that they are applying the *Graham* test. *Sakraida*, 425 U.S. at 279-80; *Anderson's-Black Rock*, 396 U.S. at 61-62. In *Sakraida*, the Court refers to synergy only in response to the Fifth Circuit's statement that the patent-in-

suit disclosed a synergistic result. *Sakraida*, 425 U.S. at 282. An absence of synergy had no effect on the Court's decision to rule the patent invalid. Rather, the patent was invalid because "this particular use of the assembly of old elements would be obvious to any person skilled in the art of mechanical application." *Id.* And in *Anderson's-Black Rock*, the Court speaks of a "synergistic result" only in response to the patentee's unsupported claim that his combination invention could produce new results above the separate use of the elements. *Anderson's-Black Rock*, 396 U.S. at 59-61. The holding, however, rested on the fact "that to those skilled in the art the use of the old elements in combination was not an invention by the obvious-nonobvious standard." *Id.* at 62-63.

The view that *Anderson's-Black Rock* and *Sakraida* should be read as upholding *Graham* finds further support in the Court's action in *Dann v. Johnston*, decided only three weeks before *Sakraida*. 425 U.S. 219 (1976). In *Dann*, both the petitioner and one *Amici* urged the Court to adopt synergism as the standard for nonobviousness and render the patent-in-suit invalid for failure to exhibit a synergistic result. *See* Brief of Petitioner, at 29; Brief of Amici Curiae for the Computer & Bus. Equip. Mfrs. Ass'n, at 9. The Court paid no heed and found the patent valid under the *Graham* framework, without making the slightest mention of synergism. *Dann*, 425 U.S. at 426-30. Furthermore, many courts of appeal, as well as the Court of Customs and Patent Appeals have rejected reading *Anderson's-Black Rock* and *Sakraida* to require "synergy" between old elements for patentability of combination inventions. *See, e.g. Rengo Co. Ltd. v. Molins Mach. Co, Inc.*, 657 F.2d 535, 543-45 (3d Cir. 1981); *Champion Spark Plug Co. v. Gyromat Corp.*, 603 F.2d 361, 372 (2d Cir. 1979); *Republic Indus., Inc. v. Schlage Lock Co.*, 592 F.2d 963, 968-69 (7th Cir. 1979); *Nickola v. Peterson*, 580 F.2d 898, 910 (6th Cir. 1978); *Stevenson v. Int'l Trade Comm'n*, 612 F.2d 546, 553 (C.C.P.A. 1979).

While the existence of a synergistic effect is clear evidence of nonobviousness, *Am. Hoist & Derrick Co. v. Sowa & Sons, Inc.*, 725 F.2d 1350, 1360 (Fed. Cir. 1984), the absence of synergism should not be viewed as determinative of obviousness. *Ryko Mfg. Co. v. Nu-Star, Inc.*, 950 F.2d 714, 717 (Fed. Cir. 1991). Under a synergism standard, "one would focus on the product created rather than on the obviousness or nonobviousness of its creation, as required under § 103." *Am. Hoist*, 725 F.2d 1360.

More importantly, IPO believes that many worthy, patentable inventions lack the presence of true synergy (1 + 1 = 3), and to require a showing of synergistic effects would set the bar for patentability far higher than the statute requires. Synergism is defined as "the interaction of elements that when combined produce a total effect that is greater than the sum of the individual elements." A synergism requirement would come close to terminating the grant of all patents in the mechanical or hydraulic arts. After all, a spring, a valve, or a lever will continue to perform the functions that have always been performed by springs, valves, and levers.

The Court should reject synergism for an even more fundamental reason: any such requirement would be inconsistent with the patent statute. Before Congress enacted § 103(a) in 1952, various approaches had been taken to obviousness. *See, e.g., Cuno Corp. v. Automatic Devices Corp.*, 314 U.S. 84, 91 (1941) (proposing the "flash of genius" test); *Hotchkiss v. Greenwood*, 52 U.S. 248, 267 (1851) (proposing the "invention" standard). Judge Rich, one of the co-authors of § 103(a), referred to these amorphous standards as "the plaything of the judges who as they became initiated into its mysteries, delighted to devise and expound their own ideas of what it meant; some very lovely prose resulting." Giles S. Rich, Principles of Patentability, 28 Geo. Wash. L. Rev. 393, 404 (1960). Section 103(a) was codified to remedy these problems by creating a uniform, definite and objective stan-

dard. *See* S. Rep. No. 82-1979, at 6 (1952); H.R. Rep. No. 82-1923, at 7 (1952). That standard, as written, militates against establishing synergism as the hallmark of nonobviousness.

Like synergism, the Government's proposed "extraordinary level of innovation" standard is inconsistent with § 103(a). According to the Government, the "core issue" and "key question" of obviousness is "whether the claimed invention manifests the extraordinary level of innovation" that justifies a patent. Gov't Br. at 10. Similarly, the Government suggested that patents should be reserved for inventors demonstrating "extraordinary skill." *Id.* at 24. This standard is reminiscent of the highly subjective "flash of genius" test that § 103(a) replaced. Section 103(a) requires patentable inventions to have been nonobvious to those of ordinary skill in the art; it does not limit the award of patents to extraordinarily skilled artisans. The Government's proposed standard would ignore the reality that many worthy, patentable inventions are created by persons of ordinary skill, or less, through serendipity or other unique circumstances. Nothing in the patent statute suggests that patents should only be awarded to Nobel laureates. Therefore, the Government's proposed "extraordinary level of innovation" standard should be rejected as too subjective and ungrounded in either the statute or this Court's case law.

CONCLUSION

IPO believes that a flexibly applied "suggestion test" is consistent with both the statutory language of § 103(a) and this Court's precedents. IPO further believes that a flexibly applied suggestion test lends consistency to the application of § 103(a) and that its abandonment would lead both to uncertainty and the greater use of improper hindsight in obviousness determinations by the PTO and the courts.

Finally, IPO believes neither "synergism" nor "extraordinary level of innovation" should be a required element of non-obviousness.

Respectfully submitted,

Of Counsel:

MARC S. ADLER
President
RICHARD F. PHILLIPS
Chair, Amicus Brief Committee
INTELLECTUAL PROPERTY
OWNERS ASSOCIATION
1255 Twenty-Third Street, N.W.
Suite 200
Washington, D.C. 20037
(202) 466-2396

PAUL H. BERGHOFF
(*Counsel of Record*)
JEREMY E. NOE
AARON F. BARKOFF
MCDONNELL BOEHNEN
HULBERT & BERGHOFF LLP
300 South Wacker Drive
Chicago, Illinois 60606
(312) 913-0001

Counsel for Amicus Curiae

APPENDIX

APPENDIX *

Members of the Board of Directors
Intellectual Property Owners Association

Marc S. Adler
Rohm and Haas Co.

Mark G. Bocchetti
Eastman Kodak Co.

Mark P. Calcaterra
DaimlerChrysler Corp.

Angelo N. Chaclas
Pitney Bowes Inc.

William J. Coughlin
Ford Global Technologies

Timothy J. Crean
SAP AG

Gerald V. Dahling
Sanofi-Aventis

Q. Todd Dickinson
General Electric Co.

Luke R. Dohmen
Boston Scientific Corp.

Beverly M. Dollar
ConocoPhillips

Kenneth D. Enborg
General Motors Corp.

Bart Eppenauer
Microsoft Corp.

Scott M. Frank
BellSouth Corp.

Jeffery B. Fromm
Hewlett-Packard Co.

Gary C. Ganzi
Siemens Water Technologies

Andy Gibbs
PatentCafe.com, Inc.

Michael L. Glenn
Dow Chemical Co.

Bernard J. Graves, Jr.
Eastman Chemical Co.

Gary L. Griswold
3M Innovative Properties Co.

John M. Gunther
EMC Corp.

Harry J. Gwinnell
Cargill, Inc.

Jack E. Haken
Koninklijke Philips
Electronics N.V.

Stephen D. Harper
Henkel Corp.

Robert P. Hayter
United Technologies Corp.

J. Jeffrey Hawley
IPO Immediate Past
President

---

* IPO procedures require approval of positions in briefs by a three-fourths majority of directors present and voting.

William B. Heming
Caterpillar Inc.

Ken Hobday
CheckFree Corp.

Dennis R. Hoerner
Monsanto Co.

Philip S. Johnson
Johnson & Johnson

David J. Kappos
IBM Corp.

Charles M. Kinzig
GlaxoSmithKline

David J. Koris
Shell International B.V.

Noreen A. Krall
Sun Microsystems, Inc.

Richard J. Lutton
Apple Computer, Inc.

Scott P. McDonald
BP America, Inc.

Jonathan P. Meyer
Motorola, Inc.

Steven W. Miller
Procter & Gamble Co.

Raghunath S. Minisandram
Seagate Technology, LLC

Douglas K. Norman
Eli Lilly and Co.

Richard F. Phillips
ExxonMobil Corp.

Peter C. Richardson
Pfizer, Inc.

Mark L. Rodgers
Air Products & Chemicals, Inc.

Robert R. Schroeder
Mars Incorporated

Suzanne M. Shema
ZymoGenetics, Inc.

David M. Simon
Intel Corp.

Brian W. Stegman
BASF Corp.

Thierry Sueur
Air Liquide

Cheryl J. Tubach
Coca-Cola Co.

Michael Walker
E.I. du Pont de Nemours
and Co.

Stuart L. Watt
Amgen, Inc.

David Westergard
Micron Technology, Inc.

No. 04-1350

Supreme Court, U.S.
FILED
21 2006
OFFICE OF THE CLERK

IN THE

Supreme Court of the United States

KSR INTERNATIONAL CO.,

Petitioner,

v.

TELEFLEX, INC., *et al.*,

Respondents.

On Writ of Certiorari to the United States Court of Appeals for the Federal Circuit

BRIEF OF *AMICUS CURIAE* INTERNATIONAL BUSINESS MACHINES CORPORATION IN SUPPORT OF NEITHER PARTY

DAVID J. KAPPOS
MARC A. EHRLICH
MANNY W. SCHECTER
IBM CORPORATION
One North Castle Drive
Armonk, NY 10504
(914) 765-4343

MARIAN UNDERWEISER
IBM CORPORATION
Rte 134/1101 Kitchawan Rd
Yorktown Heights, NY 10598
(914) 945-2756

TRACI L. LOVITT
(Counsel of record)
JONES DAY
222 East 41st Street
New York, NY 10017
(212) 326-3939

GLEN D. NAGER
GREGORY A. CASTANIAS
JONES DAY
51 Louisiana Ave., N.W.
Washington, DC 20001
(202) 879-3939

KENNETH R. ADAMO
CALVIN P. GRIFFITH
JONES DAY
North Point
901 Lakeside Avenue
Cleveland, OH 44114
(216) 586-3939
Counsel for Amicus Curiae

WILSON-EPES PRINTING CO., INC. – (202) 789-0096 – WASHINGTON, D.C. 20001

QUESTION PRESENTED

Whether the Federal Circuit erred in holding that a claimed invention cannot be held "obvious," and thus unpatentable under 35 U.S.C. § 103(a), in the absence of some proven "'teaching, suggestion, or motivation' that would have led a person of ordinary skill in the art to combine the relevant prior art teachings in the manner claimed."

TABLE OF CONTENTS

Page

QUESTION PRESENTED i

TABLE OF AUTHORITIES iv

INTEREST OF *AMICUS CURIAE* 1

STATEMENT 2

SUMMARY OF THE ARGUMENT 5

ARGUMENT 7

I. THE FEDERAL CIRCUIT'S CURRENT APPLICATION OF THE TEACHING-SUGGESTION-MOTIVATION TEST IS CONTRARY TO STATUTE AND SOUND PATENT POLICY 7

A. The Federal Circuit's Current Application Of The Teaching-Suggestion-Motivation Test Is Effectively Equivalent To The Test For Novelty 7

B. The Federal Circuit's Current Application Of The Teaching-Suggestion-Motivation Test Has Proven Unduly Burdensome And Has Resulted In The Issuance And Successful Enforcement Of Trivial Patents 10

II. THE ALTERNATE TESTS OFFERED BY KSR AND THE SOLICITOR GENERAL ARE FLAWED 13

TABLE OF CONTENTS
(continued)

Page

A. KSR's Approach Sets The Patentability Bar Too High, Injects Uncertainty Into The Patent System, And Will Block The Patenting Of Truly Meritorious Inventions 13

B. The Solicitor General's Approach Will Drive Non-Obviousness Determinations Into Infringement Litigation And Reduce Certainty And Clarity In The Patent System 16

III. APPLYING A REBUTTABLE PRESUMPTION TO THE CURRENT TEACHING-SUGGESTION-MOTIVATION TEST WOULD SATISFY STATUTORY REQUIREMENTS, COMPLY WITH THIS COURT'S PRECEDENTS, AND ADVANCE SOUND PATENT POLICY 18

A. IBM's Approach Would Apply A Rebuttable Presumption That A Person Having Ordinary Skill In The Art Would Be Motivated To Combine Existing Prior Art References Within The Analogous Art 18

B. The Rebuttable Presumption Approach Is Consistent With § 103 And This Court's Precedents 22

C. The Rebuttable Presumption Test Provides A Workable Alternative That Advances Sound Patent Policy 26

CONCLUSION 30

TABLE OF AUTHORITIES

Page

Cases

Anderson's-Black Rock, Inc. v. Pavement Salvage Co., 396 U.S. 57 (1969) 13, 14, 15
Apotex USA, Inc. v. Merck & Co., 254 F.3d 1031 (Fed. Cir. 2001) 23
Atlantic Works v. Brady, 107 U.S. (17 Otto) 192 (1883) 12
In re Bell, 991 F.2d 781 (Fed. Cir. 1993) 19
Bonito Boats, Inc. v. Thunder Craft Boats, Inc., 489 U.S. 141 (1989) ..... *passim*
C & A Potts & Co. v. Creager, 155 U.S. 597 (1895) 18
In re Clay, 966 F.2d 656 (Fed. Cir. 1992) 18
Dann v. Johnston, 425 U.S. 219 (1976) 10
Festo Corp. v. Shoketsu Kinzoku Kogyo Kabushiki Co., Ltd., 535 U.S. 722 (2002) ..... *passim*
Graham v. John Deere Co., 383 U.S. 1 (1966) ..... *passim*
Great Atlantic & Pacific Tea Co. v. Supermarket Equipment Corp., 340 U.S. 147 (1950) 17
Innovative Scuba Concepts, Inc. v. Feder Industries, Inc., 26 F.3d 1112 (Fed. Cir. 1994) 23
In re Kahn, 441 F.3d 977 (Fed. Cir. 2006) 9
In re Kotzab, 217 F.3d 1365 (Fed. Cir. 2000) 9
In re Lee, 277 F.3d 1338 (Fed. Cir. 2002) 9
Monarch Knitting Machinery Corp. v. Sulzer Morat GmbH, 139 F.3d 877 (Fed. Cir. 1998) 20
In re Oetiker, 977 F.2d 1443 (Fed. Cir. 1992) 18, 19, 22, 23
Pfaff v. Wells Electronics, Inc., 525 U.S. 55 (1998) 17
Raytheon Co. v. Roper Corp., 724 F.2d 951 (Fed. Cir. 1983) 20
Sakraida v. Ag Pro, Inc., 425 U.S. 273 (1976) 14, 15
In re Sponnoble, 405 F.2d 578 (C.C.P.A. 1969) 20

TABLE OF AUTHORITIES
(continued)

Page

Tec Air Inc. v. Denso Manufacturing Michigan, Inc., 192 F.3d 1353 (Fed. Cir. 1999).....20
Warner-Jenkinson Corp. v. Hilton Davis Chemical Co., 520 U.S. 17 (1997).....3, 25, 26
Winner International Royalty Corp. v. Wang, 202 F.3d 1340 (Fed Cir. 2000).....9
In re Wood, 599 F.2d 1032 (C.C.P.A. 1979).....19, 22, 23
In re Zurko, 258 F.3d 1379 (Fed. Cir. 2001).....8

Statutes & Rules

Patent Act of 1952, 35 U.S.C. §§ 100 *et seq.*
35 U.S.C. § 101.....2, 7
35 U.S.C. § 102.....2, 3, 7, 8
35 U.S.C. § 103..... *passim*
35 U.S.C. § 111.....3
35 U.S.C. § 112.....3, 21
35 U.S.C. § 113.....3
35 U.S.C. § 134.....3
35 U.S.C. § 141.....3
35 U.S.C. § 145.....3
35 U.S.C. § 271.....4
35 U.S.C. § 282.....4, 23, 26
Sup. Ct. R. 37.3.....1
Sup. Ct. R. 37.6.....1

Miscellaneous

Martin J. Adelman, PATENT LAW PERSPECTIVES (2d ed. 2006).....14, 15, 17
2 Donald S. Chisum, CHISUM ON PATENTS (2006).....19, 20, 22
Dan L. Burk & Mark A. Lemley, *Is Patent Law Technology-Specific?*, 17 BERKELEY TECH. L.J. 1155 (2002).....28

TABLE OF AUTHORITIES
(continued)

Page

F. Scott Kieff & Troy A. Paredes, *The Basics Matter At the Periphery of Intellectual Property*, 73 GEO. WASH. L. REV. 174 (2004) 15

Recombinant Products & Nonobviousness: A Typology, 13 SANTA CLARA COMPUTER & HIGH TECH. L.J. 1 (1997) 23, 26

Giles S. Rich, *Escaping The Tyranny of Words—Is Evolution In Legal Thinking Impossible?*, 60 J. PAT. OFF. SOC'Y 271 (1978) 15

Note, Jeffrey A. Simenauer, *Patentability of Computer-Related Inventions: A Criticism of the PTO's View on Algorithms*, 54 GEO. WASH. L. REV. 871 (1986) 15

David E. Wigley, *Evolution of the Concept of Non-Obviousness of the Novel Invention: From a Flash of Genius to the Trilogy*, 42 ARIZ. L. REV. 581 (2000) 15

Federal Trade Commission, *To Promote Innovation: The Proper Balance of Competition and Patent Law and Policy* (Oct. 2003) 10, 11, 27

Manual of Patent Examining Procedures (2005) 19, 20

National Research Council of National Academics, *A Patent System for the 21st Century* (2004) 11, 27, 28

United States Patent & Trademark Office, USPTO RELEASES ANNUAL LIST OF TOP 10 ORGANIZATIONS RECEIVING MOST U.S. PATENTS (Jan. 10, 2006) 1

International Business Machines Corporation ("IBM") respectfully submits this brief pursuant to Supreme Court Rule 37.3 in support of neither party.[1] IBM urges the Court to vacate the judgment of the United States Court of Appeals for the Federal Circuit and remand the case in light of the non-obviousness test proposed herein.

INTEREST OF *AMICUS CURIAE*

IBM is widely acknowledged as a leader in patent acquisition and exploitation. In the last decade alone, IBM has received tens of thousands of patents; it has been awarded more United States patents than any other assignee in each of the past thirteen years, and it earns hundreds of millions of dollars every year from licensing its intellectual property portfolio.[2] IBM is also a globally recognized leader in the field of information technology research, development, design, manufacturing, and services. IBM's business interests encompass a broad range of industries and fields that enable, and are enabled by, information technology, including electrical engineering, software and computer technology, life sciences, physical and organic chemistry, business consulting, computer services, and the mechanical arts.

---

[1] Pursuant to Supreme Court Rule 37.6, IBM states that no counsel for a party authored this brief in whole or in part, and no person or entity other than IBM has made a monetary contribution to the preparation or submission of this brief. All parties have consented to the filing of this amicus brief, and their consent letters are on file with the Clerk's Office.

[2] The United States Patent and Trademark Office reported that in 2005, IBM received 2,941 patents, which is over 1,100 more United States patents than any other company. *See* United States Patent & Trademark Office, USPTO RELEASES ANNUAL LIST OF TOP 10 ORGANIZATIONS RECEIVING MOST U.S. PATENTS (Jan. 10, 2006), *available at* http://www.uspto.gov/web/offices/com/speeches/06-03.htm (last visited Aug. 17, 2006).

In light of its large patent portfolio, diverse business, and innovative research and development, IBM has an interest in this case both as a patent holder and as a manufacturer subject to infringement claims. That is, as one of the most successful licensors of patented technology in the world, IBM relies on its patent rights to secure licenses. And, as a large corporation focused on offering innovative products and services in a broad range of fields, IBM is frequently forced to defend against charges of infringement.

IBM thus has a strong interest in maintaining a fair patent system that promotes innovation in all industries and properly balances the interests of the patent owner, the accused infringer, and the public, rather than favoring any particular party. IBM's interest is in establishing clear rules for a workable patent system that will provide increased certainty about the scope and validity of patent rights for patent owners, who rely on those rights to enforce their patents, and for members of the public, who rely on understanding a patent's exclusive scope to determine what is, and is not, in the public domain.

STATEMENT

This case presents one of the most fundamental and frequently recurring questions in patent law—how the requirement that an invention be "non-obvious" applies to a claimed invention where all of the invention's elements are found in the prior art, *e.g.*, previously published references.

1. The Patent Act of 1952, 35 U.S.C. §§ 100 *et seq.*, provides that an invention is patentable only if it satisfies three independent requirements. *See Graham v. John Deere Co.*, 383 U.S. 1, 12 (1966) (observing that "patentability is dependent upon three explicit conditions: novelty and utility as articulated in § 101 and § 102, and non-obviousness . . . , as set out in § 103").

First, the claimed invention must be "useful"—the Act's "utility requirement." *See* 35 U.S.C. § 101. Second, the

claimed invention must not have been, among other things, previously "known or used by others in this country," or "patented or described in a printed publication in this or a foreign country"—the requirement of newness or "novelty." *Id.* § 102 (a), (b). And, third, the invention must not "have been obvious at the time the invention was made" to a person of "ordinary skill in the art"—the "non-obviousness" requirement at issue here. *Id.* § 103(a).

2. The question whether an invention satisfies the Patent Act's requirements is subject to consideration through two separate procedural vehicles established under the Patent Act.

Initially, a determination of patentability is made administratively as a result of the patent application process before the U.S. Patent and Trademark Office ("PTO"). As part of this process, the applicant seeking to patent an invention submits, among other things, a specification, *see* 35 U.S.C. § 111(a)(2)(A), which is a "clear" and "concise" written description of the invention, and may also submit a drawing. *Id.* §§ 112, 113. The applicant must conclude his specification with a claim or claims that "poin[t] out and distinctly clai[m] the subject matter which the applicant regards as his invention." *Id.* § 112. The specification and claims are examined by the PTO to determine the patentability of the claimed invention and define the scope of protection afforded by the patent. In addition, they are used in statutory proceedings for review of PTO decisions—before the Board of Patent Appeals and Interferences, the United States District Court for the District of Columbia, or the Court of Appeals for the Federal Circuit—if the PTO determines that an application is not patentable and review is sought. *See id.* §§ 134, 141, 145. Thus, the patent application process calls for the creation of the specification and claims, which are intended to provide notice to the public and reviewing bodies of the nature and scope of the invention covered by the patent. *See Warner-Jenkinson*

Corp. v. Hilton Davis Chem. Co., 520 U.S. 17, 29 (1997) (referring to "the definitional and public notice functions of the statutory claiming requirement").

The validity of a patent may also be reviewed by federal courts in patent infringement actions. *See generally* 35 U.S.C. § 271. That is, where a patent is allegedly infringed, the patentee may sue to enforce its right to exclude others and seek relief in an appropriate federal court. In response, the defendant may challenge the "validity . . . of the patent," including whether the claimed invention satisfies the requirements of utility, novelty and non-obviousness. *Id.* § 282.

As a matter of patent policy, the requirements for patentability and patent validity should be clear and predictable. As the Court has explained, "[t]he monopoly [conferred by a patent] is a property right; and like any property right, its boundaries should be clear." *Festo Corp. v. Shoketsu Kinzoku Kogyo Kabushiki Co., Ltd.*, 535 U.S. 722, 730 (2002). Otherwise, the public cannot discern the scope of the patent until after all infringement litigation has concluded and will not invest in innovative products that might potentially fall within the patent's scope. *See Bonito Boats, Inc. v. Thunder Craft Boats, Inc.*, 489 U.S. 141, 150 (1989).

3. This case concerns the meaning and application of the non-obviousness requirement in cases where a claimed invention is a combination of elements found in two or more prior art references. In the proceedings below, the Federal Circuit held that an invention combining such elements is non-obvious unless the prior art teaches, suggests, or motivates their combination—the Federal Circuit's "teaching-suggestion-motivation test." *See* Pet. App. 1a-17a. To make this showing, the Federal Circuit requires evidence of the "*specific understanding* or principle within the knowledge of the skilled artisan that would have motivated

one with no knowledge of [the] invention to make the combination" in "the particular manner claimed" in the patent. *Id.* at 11a-12a (internal quotation marks and citation omitted; emphasis added). Thus, according to the Federal Circuit, an invention combining elements in the prior art is non-obvious absent "specific findings as to a suggestion or motivation" to make the patented combination. *Id.* at 12a.

SUMMARY OF THE ARGUMENT

As a company that is both a patent holder relying on its patent rights to secure licenses and a global provider of diverse products and services subject to claims of infringement by others, IBM has a unique interest in establishing a balanced, clear, and practically-applicable test for non-obviousness. In its view, the approaches suggested to this Court to determine non-obviousness either overly-restrict or overly-broaden the non-obviousness requirement, or lack the clarity necessary to be practically applicable.

For example, the Federal Circuit's current application of the teaching-suggestion-motivation test renders far too many trivial inventions non-obvious and thereby results in the granting and successful enforcement of many meritless patents. By holding, as it did below, that a combination of references is obvious only where the prior art *specifically* teaches or motivates the combination, the Federal Circuit has raised the evidentiary bar so high that, to demonstrate obviousness, it effectively requires a complete *written* explanation in the prior art references to make the claimed combination. Trivial combinations, however, are rarely the subject of published material.

The alternate tests suggested by KSR and the Solicitor General, respectively, are too difficult to satisfy and too amorphous to provide a clear and workable rule. KSR would have this Court eliminate the Federal Circuit's longstanding teaching-suggestion-motivation test entirely and examine, instead, whether the combination of existing elements results

in an invention with new "synergies" or "new functions." This test is unsupported by the language of § 103, is inconsistent with the weight of this Court's precedents, would lead to hindsight determinations that inventions are obvious, and would work too dramatic a shift in patent law. The Solicitor General, while properly recognizing a role for the teaching-suggestion-motivation test, argues that the test should not be the exclusive means to show obviousness but does not define what the other tests should be. The Solicitor General's recommendation thus lacks clarity, will effectively relegate determinations of non-obviousness to infringement litigation, and will deprive the public of effective notice of the scope of patent rights.

IBM proposes a different test for non-obviousness that is consistent with the Patent Act and existing precedents, is clear and workable, and strikes a balance between all of the various approaches heretofore suggested to the Court: retain the basic teaching-suggestion-motivation test, but apply a rebuttable presumption that elements found in multiple prior art references would be combined by the skilled artisan, when all of the elements are found in references within the "analogous art." Analogous art is a well-known and long-established concept in patent law referring to prior art derived from the field of the problem or invention; it already defines boundaries on the scope of prior art considered for non-obviousness determinations. *See infra* pp. 18-19. A patent applicant can narrow and focus the scope of the art to which the presumption applies, moreover, by narrowing and focusing the scope of the claimed invention during the patent application process. The applicant can also rebut the presumption with evidence that a skilled artisan would not have been motivated to combine the references. Secondary considerations of non-obviousness would remain probative of the ultimate determination of obviousness as under current law but would not be available to rebut the presumption unless those considerations are otherwise probative of the

skilled artisan's motivation to combine. By encouraging the patent applicant to define the scope of the invention more precisely in the application process in order to narrow the body of art from which presumptively combinable references will be drawn, the scope and validity of the issued patent will be better defined in the public record of the application process. Thus, the applicant and public will be better positioned to understand the patent's scope without resort to litigation, which will advance the intent of the patent system to promote innovation.

ARGUMENT

I. THE FEDERAL CIRCUIT'S CURRENT APPLICATION OF THE TEACHING-SUGGESTION-MOTIVATION TEST IS CONTRARY TO STATUTE AND SOUND PATENT POLICY.

The Federal Circuit currently requires that patent examiners and challengers provide *specific* evidence that a combination was taught or suggested in the prior art to show that an invention combining elements in the prior art is obvious. This formulation of the teaching-suggestion-motivation test is flawed, because it raises the bar for showing obviousness so high that it effectively collapses the novelty and non-obviousness tests for patentability and materially diminishes the quality of patents.

A. The Federal Circuit's Current Application Of The Teaching-Suggestion-Motivation Test Is Effectively Equivalent To The Test For Novelty.

It is well-established that the utility, novelty, and non-obviousness requirements are separate and independent. *See* 35 U.S.C. §§ 101-03. As this Court has recognized, "the structure of these three sections indicates that patentability is dependent upon *three* explicit conditions: "novelty and utility as articulated and defined in § 101 and § 102, and

non-obviousness . . . as set out in § 103." *Graham*, 383 U.S. at 12.

With respect to novelty and non-obviousness, the former examines whether an express description of a claimed invention exists in a single prior art reference, while the latter examines whether a claimed invention can be deduced from a single or multiple references. Thus, "[t]he non-obviousness requirement *extends* the field of unpatentable material *beyond that which is known to the public* under § 102, to include that which could readily be *deduced* from publicly available material by a person of ordinary skill in the pertinent field of endeavor." *Bonito Boats*, 489 U.S. at 150 (emphasis added).

Contrary to Congress's intent to define three separate requirements for patentability, however, the Federal Circuit's current application of the teaching-suggestion-motivation test effectively equates novelty and non-obviousness where the patent at issue involves a combination of existing elements. To demonstrate obviousness, the court requires (as it did below) not only evidence that all the elements of the claimed invention are found in the prior art, but also evidence of the "*specific understanding* or principle within the knowledge of the skilled artisan that would have motivated one with no knowledge of [the] invention to make the combination" in "the particular manner claimed" in the patent. Pet. App. 11a-12a (internal quotation marks and citation omitted; emphasis added). The Federal Circuit has typically applied this evidentiary requirement of a specific teaching or motivation so strictly that it is extremely difficult to prove obviousness without producing an explicit written statement in the prior art that teaches or suggests the combination. *See, e.g.*, *In re Zurko*, 258 F.3d 1379, 1386 (Fed. Cir. 2001) ("[T]he Board cannot simply reach conclusions based on its own understanding or experience—or on its assessment of what would be basic knowledge or common sense. Rather, the Board must point to some

concrete evidence in the record in support of these findings.").[3] Thus, as a practical matter, the only way to prove a specific teaching to combine elements is to ferret out prior art that *explicitly* teaches or motivates the combination.[4]

This is, for all intents and purposes, the test for novelty. The purpose of § 102's novelty requirement is "to exclude from consideration for patent protection knowledge that is already available to the public" in the prior art. *Bonito Boats*, 489 U.S. at 148. The purpose of § 103 is to exclude from patent protection knowledge that can be *deduced* from the prior art. *Id.* at 150. But, the Federal Circuit has raised the evidentiary requirement for the teaching-suggestion-motivation test so high that obviousness, like a lack of novelty, can effectively be demonstrated only when the claimed combination is *expressly* taught in the prior art.

---

[3] *See In re Lee*, 277 F.3d 1338, 1344 (Fed. Cir. 2002) (where the Board of Patent Appeals and Interferences "rejected the need for 'any specific hint or suggestion in a particular reference' to support the combination of . . . references" and relied instead on the common knowledge of those skilled in the art, the Federal Circuit held that the Board had omitted from its analysis "a relevant factor required by precedent [that caused it to commit] both legal error and arbitrary agency action"). *See also In re Kotzab*, 217 F.3d 1365, 1370-71 (Fed. Cir. 2000); *Winner Int'l Royalty Corp. v. Wang*, 202 F.3d 1340, 1348-49 (Fed Cir. 2000).

[4] After this Court issued its order calling for the views of the Solicitor General on whether *certiorari* should be granted, the Federal Circuit suggested that "the teaching, motivation, or suggestion may be implicit from the prior art as a whole, rather than expressly stated in the references." *See In re Kahn*, 441 F.3d 977, 987 (Fed. Cir. 2006) (internal quotation marks omitted). The Federal Circuit, however, has not consistently endorsed a test for an "implied" teaching, suggestion or motivation. Moreover, the court's evidentiary requirements make satisfying any implied test extremely difficult.

B. The Federal Circuit's Current Application Of The Teaching-Suggestion-Motivation Test Has Proven Unduly Burdensome And Has Resulted In The Issuance And Successful Enforcement Of Trivial Patents.

The Federal Circuit's approach to non-obviousness has undercut patent law and policy.

First, the court's current application of the teaching-suggestion-motivation test is inconsistent with the Patent Act and this Court's precedents. Section 103 of the Patent Act provides that non-obviousness is to be determined, not by express references in the prior art, but by the deductions of a "person having ordinary skill in the art to which said subject matter pertains." 35 U.S.C. § 103(a). In light of this language, this Court has long recognized that "the 'obviousness' test of § 103 is not one which turns on whether an invention is equivalent to some element in the prior art but rather whether the difference between the prior art and the subject matter in question is a difference sufficient to render the claimed subject matter unobvious *to one skilled in the applicable art*." *Dann v. Johnston*, 425 U.S. 219, 228 (1976) (internal quotation marks and citation omitted; emphasis added). Thus, "in assessing obviousness, the analysis should ascribe to the person having ordinary skill in the art an ability to combine or modify prior art references that is consistent with the creativity and problem solving skills that in fact are characteristic of those having ordinary skill in the art." Federal Trade Commission, *To Promote Innovation: The Proper Balance of Competition and Patent Law and Policy*, Ch. 4, at 15 (Oct. 2003) ("FTC Report") *available at* www.ftc.gov/os/2003/10/innovationrpt.pdf (last visited Aug. 17, 2006). Because the effect of the Federal Circuit's approach is that the teaching must *explicitly* exist in the prior art, the Federal Circuit ascribes no deductive capability to the person having ordinary skill in the art and thus has effectively eliminated § 103's requirement that non-

obviousness determinations be based on such a person's deductive skills.

Second, the Federal Circuit's application of the test has reduced patent quality. There can be no debate that "creative people generally speaking strive to publish non-obvious information. So if it is obvious to those of skill in the art to combine references, it is unlikely that they will publish such information." National Research Council of National Academics, *A Patent System for the 21st Century*, 59, 90 (2004), *available at* http://www.nap.edu/html/patentsystem/0309089107.pdf (last visited Aug. 17, 2006) ("NRC Study"). Because skilled artisans tend not to publish obvious combinations, the Federal Circuit's effective requirement of an express teaching-suggestion-motivation means that inventions whose elements are all found among a combination of prior art references are being judged non-obvious "when only a modicum of additional insight [by those skilled in the art] is needed." FTC Report, Ch. 4, at 14.

Reducing the standards for obtaining a patent to the point where inappropriate patents for trivial variations are granted is contrary to the public good. As this Court observed well over one-hundred years ago:

> It was never the object of [patent] laws to grant a monopoly for every trifling device, every shadow of a shade of an idea, which would naturally and spontaneously occur to any skilled mechanic or operator in the ordinary progress of manufactures. Such an indiscriminate creation of exclusive privileges tends rather to obstruct than to stimulate invention. It creates a class of speculative schemers who make it their business to watch the advancing wave of improvement, and gather its foam in the form of patented monopolies, which enable them to lay a heavy tax upon the industry of the country, without contributing anything to the real advancement of the art. It embarrasses the honest pursuit of business with fears

> and apprehensions of concealed liens and unknown liabilities to lawsuits and vexatious accountings for profits made in good faith.

Atl. Works v. Brady, 107 U.S. (17 Otto) 192, 200 (1883).

Third, the Federal Circuit's application of the teaching-suggestion-motivation test has shifted determinations of non-obviousness from the patent application process to infringement litigation. Application of the Federal Circuit's test places undue burdens on patent examiners who, with limited time and resources, are unlikely to locate an explicit teaching to combine the prior art before them and thus cannot effectively require applicants to clearly delineate the proper scope of their inventions. Consequently, the bar for patentability is set too low; many broadly-claimed and ill-defined patents are granted with little or no guidance in the record of patent prosecution for the public to examine and evaluate non-obviousness. Issued patents thus lack the "clarity" of property rights that this Court has found "essential to promote progress, because it enables efficient investment in innovation." *Festo Corp. v. Shoketsu Kinzoku Kogyo Kabushiki Co., Ltd.*, 535 U.S. 722, 730-31 (2002). "A patent holder should know what he owns, and the public should know what he does not" to satisfy "the delicate balance the law attempts to maintain between inventors, who rely on the promise of the law to bring the invention forth, and the public, which should be encouraged to pursue innovations, creations, and new ideas beyond the inventor's exclusive rights." *Id.*; *Bonito Boats*, 489 U.S. at 150.

In the absence of such clarity, the public cannot tell whether an issued patent is obvious in light of prior art until the patent is litigated and cannot otherwise discern the proper scope of the patent. After commencing litigation, the defendant is typically forced under the Federal Circuit's test to locate an express reference in the prior art without any clear record of the patent's scope, leading to the current

imbalanced state in which patent applicants can easily satisfy the non-obviousness requirement during the application process but defendants seeking to prove obviousness must overcome extremely stringent evidentiary requirements. As a result, innovation is hampered, because the risk of costly infringement litigation is too high.

Given the state of the law as described above, the risk of infringement litigation is unreasonably high, trivial patents are allowed to stand, innovation is hampered, and the public pays the price of unwarranted monopolies. This Court should not uphold the Federal Circuit's current application of the teaching-suggestion-motivation test.

II. THE ALTERNATE TESTS OFFERED BY KSR AND THE SOLICITOR GENERAL ARE FLAWED.

A. KSR's Approach Sets The Patentability Bar Too High, Injects Uncertainty Into The Patent System, And Will Block The Patenting Of Truly Meritorious Inventions.

To avoid the problems of the Federal Circuit's current approach, KSR proposes that this Court eliminate the teaching-suggestion-motivation test and hold that an invention combining elements found in prior art references is obvious "unless the combination produces 'a new or different function' or demonstrates a 'synergistic result.'" Pet. 14 (quoting *Anderson's-Black Rock, Inc. v. Pavement Salvage Co.*, 396 U.S. 57, 60-61 (1969)). Thus, in KSR's view, a combination is obvious if it "unites old elements with no change in their respective functions unless the combination results in a new function." *Id.* at 16. KSR's complete abandonment of the teaching-suggestion-motivation test, however, is inconsistent with the weight of this Court's obviousness precedents, unworkable, and too dramatic a departure from the Federal Circuit's existing test.

This Court's precedents establish that obviousness is determined by "deduc[ing] from publicly available material" what would have been obvious to "a person of ordinary skill in the pertinent field of endeavor." *Bonito Boats*, 489 U.S. at 150. For over 40 years, since *Graham v. John Deere Co.*, 383 U.S. 1 (1966), the Court has held that this deduction is made as follows: "the scope and content of the prior art are to be determined; differences between the prior art and the claims at issue are to be ascertained; and the level of ordinary skill in the pertinent art resolved. Against this background, the obviousness or nonobviousness of the subject matter is determined." *Id.* at 17. Thus, the Court judges non-obviousness over the relevant prior art as a whole, through the eyes of one skilled in the relevant art. While the existence of a synergy might provide evidence of non-obviousness, KSR's claim that an invention combining prior art references is non-obvious *only* if it results in a new synergy or function is a fundamental break from this Court's long-standing approach toward non-obviousness.

KSR's reliance on *Sakraida v. Ag Pro, Inc.*, 425 U.S. 273, 274 (1976), and *Anderson's-Black Rock, Inc. v. Pavement Salvage Co.*, 396 U.S. 57 (1969), to demonstrate the purported validity of its "synergy" test, moreover, is misplaced. Neither case abandons *Graham*'s non-obviousness test. And, to the extent they can be read to add a *requirement* of "synergy" or "function" to the *Graham* analysis, the cases have been criticized as an inconsistent departure from this Court's precedents, unclear and unworkable. *See, e.g.*, Martin J. Adelman, PATENT LAW PERSPECTIVES § 2.6, at 2-421 (2d ed. 2006) (*Sakraida*'s synergy test did not "clarify the law and provide thoughtful guidance for lower courts. It will not reduce uncertainty and

confusion nor promote the orderly administration of justice").[5] After all, when an invention can be found obvious based solely on a subjective determination of synergy, the tendency will be to find the prior art references obviously combinable, regardless of whether it would have actually been obvious to make the combination. Thus, application of KSR's synergy test would lead to impermissible hindsight determinations of obviousness—the determinations will be impacted by "the temptation to read into the prior art the teachings of the invention in issue." *Graham*, 383 U.S. at 36; Adelman, *supra*, § 2.6, at 2-421.

---

[5] *See also* F. Scott Kieff & Troy A. Paredes, *The Basics Matter At the Periphery of Intellectual Property*, 73 GEO. WASH. L. REV. 174, 178 (2004) (observing that in *Sakraida* and *Anderson's-Black Rock* "the Court reinjected confusion into the nonobviousness doctrine by contriving new requirements for 'synergism' and 'combination' patents"); Giles S. Rich, *Escaping The Tyranny of Words—Is Evolution In Legal Thinking Impossible?*, 60 J. PAT. OFF. SOC'Y 271, 296 (1978) (observing that the mistake in *Sakraida* was the Court's "apparently unthinking adherence to the outworn and unhelpful [] requirement for invention, after telling the world in *Graham* that Congress has emphasized non-obviousness as the operative test, which is the new statutory formulation") (internal quotation marks and citation omitted); David E. Wigley, *Evolution of the Concept of Non-Obviousness of the Novel Invention: From a Flash of Genius to the Trilogy*, 42 ARIZ. L. REV. 581, 597 (2000) ("After the *Anderson's-Black Rock* and *Ag Pro* decisions, confusion prevailed among the district courts and various circuits in their applications and opinions on § 103."); Note, Jeffrey A. Simenauer, *Patentability of Computer-Related Inventions: A Criticism of the PTO's View on Algorithms*, 54 GEO. WASH. L. REV. 871, 898 n.158 (1986) (observing that the synergistic "standard of patentability was not widely accepted because it was viewed as having a chilling effect on the promotion of science and the useful arts, a result clearly contrary to Article I, § 8, cl. 8 of the Constitution. This standard is also considered unreasonable because every invention ultimately comprises a combination of old elements") (citation omitted).

Completely abandoning the teaching-suggestion-motivation test, as KSR proposes, would be undesirable from a patent policy perspective. As KSR acknowledges, "[t]he Federal Circuit's 'teaching-suggestion-motivation test' has been applied in *hundreds* of cases," Pet. 3 (emphasis added), and practitioners, inventors, and businesses, including IBM, have come to rely on it. When reviewing such a long-standing test, "courts must be cautious before adopting changes that disrupt the settled expectations of the inventing community." *Festo Corp.*, 535 U.S. at 739.

B. The Solicitor General's Approach Will Drive Non-Obviousness Determinations Into Infringement Litigation And Reduce Certainty And Clarity In The Patent System.

In his amicus brief supporting a grant of *certiorari*, the Solicitor General argues that the Court should retain the teaching-suggestion-motivation test but hold that the Federal Circuit erred in treating it as "the *exclusive* means of showing obviousness." Br. of U.S. at 13 (filed May 25, 2006) (emphasis in original). The Solicitor General further suggests that this Court leave these other tests largely undefined, because in his view, non-obviousness should be judged on a "case-by-case" basis. *Id.* at 11. Thus, the Solicitor General would have the Court turn obviousness into a sort of "I'll know it when I see it" test. While the Solicitor General's approach is an improvement on KSR's because it retains some role for the well-established teaching-suggestion-motivation test, it should not be adopted because it is ultimately standard-less.

This Court has repeatedly stressed the need for clarity in patent laws. *See supra* pp. 12-13. Thus, it has moved away from tests that require subjective determinations by judges, to objective tests that are readily applicable by patent examiners and readily understood by patent applicants and

challengers. *See Festo Corp.*, 535 U.S. at 739; *Pfaff v. Wells Elecs., Inc.*, 525 U.S. 55, 65-66 & n.11 (1998).

The Solicitor General's test, however, fails to provide any clear standard for determining non-obviousness, leaving the determination to the courts on a "case-by-case" basis. This approach is perhaps more flawed than the current test for non-obviousness from a practitioner's perspective, because no one, not patent owners, challengers, nor the public, will be able to meaningfully judge the valid scope of a patent until *all* judicial review of the patent—both the patent application process and infringement litigation—is complete. Leaving the non-obviousness test as a purely subjective review of each case means that there is an enhanced potential for any reviewing body to examine the facts and disagree with the conclusions of the prior reviewing body. As a result, there can be no predictability in the patent process until the last court has completed its review of the patent.

Leaving the test for non-obviousness largely undefined and subjective will also inevitably lead to decisions by hindsight. Indeed, the Solicitor General's suggestion that non-obviousness be left to an undefined, case-by-case determination is, in this respect, akin to this Court's pre-1952 tests for patentability, which required judges to examine the subject of the patent as a whole and determine whether it constituted an "invention." *Great Atl. & Pac. Tea Co. v. Supermarket Equip. Corp.*, 340 U.S. 147, 151 (1950). Like this pre-1952 approach, the Solicitor General's determination would be "the culmination of subjective hindsight-ridden and inconsistent judicial determination . . . on the part of judges having no day-to-day familiarity with what would be obvious or unobvious to a person of ordinary skill in the art" as required by § 103. Adelman, *supra*, § 2.6, at 2-415. Accordingly, to provide the clarity that is essential for the proper operation of the patent system, this Court should not adopt the Solicitor General's standard-less and ill-defined test for non-obviousness.

III. APPLYING A REBUTTABLE PRESUMPTION TO THE CURRENT TEACHING-SUGGESTION-MOTIVATION TEST WOULD SATISFY STATUTORY REQUIREMENTS, COMPLY WITH THIS COURT'S PRECEDENTS, AND ADVANCE SOUND PATENT POLICY.

A. IBM's Approach Would Apply A Rebuttable Presumption That A Person Having Ordinary Skill In The Art Would Be Motivated To Combine Existing Prior Art References Within The Analogous Art.

IBM's approach to non-obviousness would retain the long-standing teaching-suggestion-motivation test, but establish a clear rule permitting the application of a rebuttable presumption that prior art references would be combined by one of ordinary skill in the art in certain appropriate instances. When this presumption applies, a specific showing of motivation, teaching, or suggestion to combine would not be required.

In IBM's view, references should be *presumed* combinable by a person having ordinary skill in the art where the references are within the scope of the "analogous art." Analogous art is prior art "in the field of the applicant's endeavor or, if not, then . . . reasonably pertinent to the particular problem with which the inventor was concerned." *In re Oetiker*, 977 F.2d 1443, 1447 (Fed. Cir. 1992). The doctrine of analogous art is a well-established and familiar concept in patent law that has its origin in this Court's 1895 decision in *C & A Potts & Co. v. Creager*, 155 U.S. 597 (1895), and already serves to define boundaries on the scope of prior art considered in non-obviousness determinations. *See, e.g., In re Clay*, 966 F.2d 656, 658 (Fed. Cir. 1992) ("Although § 103 does not, by its terms, define the art to which the subject matter sought to be patented pertains, this

determination is frequently couched in terms of whether the art is analogous or not, *i.e.*, whether the art is too remote to be treated as prior art.") (internal quotation marks, alterations, and citation omitted). *See also* 2 Donald S. Chisum, CHISUM ON PATENTS § 5.03[1][a] (2006) (discussing the doctrine of analogous art and its over 100-year history).

Basing a presumption on the analogous art best captures the innovative process, because such art is the very subject matter that one of ordinary skill would consider and use as the basis for combinations when making an invention. Thus, the presumption "consider[s] 'the reality of the circumstances,'" and reflects the "common sense" way to "decid[e] in which fields a person of ordinary skill would reasonably be expected to look for a solution to the problem facing the inventor." *Oetiker*, 977 F.2d at 1447 (quoting *In re Wood*, 599 F.2d 1032, 1036 (C.C.P.A. 1979)).

The relevant analogous art is initially defined in the patent application and may subsequently be narrowed through the application process. Indeed, the patent examiner must determine the scope of the analogous art, because an obviousness rejection can be based only on references within the analogous art. *See* Manual of Patent Examining Procedures ("MPEP") § 2141.01(a) (2005). To this end, the PTO already advises applicants to include a statement of the field of art in the specification, which informs the examiner's determination of the analogous art. *See* MPEP § 608.01(c) (stating, in relevant part that "[t]he Background of the Invention ordinarily comprises two parts: (1) Field of the Invention: A statement of the field of art to which the invention pertains"). As it is today, the burden of demonstrating that prior art references fall within the relevant analogous art would be initially on the patent examiner in patent application proceedings and on the party challenging the patent's validity in infringement proceedings. *See In re Bell*, 991 F.2d 781, 783 (Fed. Cir.

1993) (initial burden on the patent examiner); *Monarch Knitting Mach. Corp. v. Sulzer Morat GmbH*, 139 F.3d 877, 881 (Fed. Cir. 1998) (burden on patent challenger); MPEP § 2141.01(a).

Once established, the presumption may be rebutted by evidence showing that a person of ordinary skill would not have been motivated to make the combination. Thus, rebuttal evidence might include proof that the combination was technologically infeasible or impossible at the time, or evidence that the prior art was "teaching away" from the combination. *See, e.g.*, *Tec Air Inc. v. Denso Mfg. Mich., Inc.*, 192 F.3d 1353, 1360 (Fed. Cir. 1999) ("There is no suggestion to combine, however, if a reference teaches away from its combination with another source.").[6] Certain secondary considerations, such as "commercial success, long felt but unsolved needs, failure of others, etc.," *Graham*, 383 U.S. at 17, that may be probative of whether there was any motivation to combine would also serve as rebuttal evidence, while other secondary considerations unrelated to such motivation would continue to have the same role that they do today: they would be used to bolster the ultimate conclusion of non-obviousness.[7] *See id.*; *see also* 2 CHISUM, *supra*,

---

[6] *See also Raytheon Co. v. Roper Corp.*, 724 F.2d 951, 961 (Fed. Cir. 1983) (holding that the "prior art's teaching away . . . [is] highly probative, objective criteria fully capable of serving as a foundation for the legal conclusion of nonobviousness"); *In re Sponnoble*, 405 F.2d 578, 587 (C.C.P.A. 1969) ("[W]e believe that the multi-reference rejection affirmed below is improper for reasons existing within the disclosures of the references themselves, namely, that the references themselves teach away from the combination.").

[7] Under *Graham*, the factors courts must consider in determining obviousness are as follows: "the scope and content of the prior art," "differences between the prior art and the claims at issue," and "the level

§ 5.06[1][b][i] (observing that secondary considerations are used to "rebu[t] prima facie obviousness"). Under this approach, the familiar and traditional framework of non-obviousness, including the basic test set forth in *Graham* and the teaching-suggestion-motivation test would remain, while the adverse impacts of the Federal Circuit's overly-burdensome evidentiary requirement would be remedied.

The rebuttable presumption test recommended by IBM would increase patent quality by reducing the issuance and successful enforcement of patents on trivial combinations that, on their face, would have been obvious to a person having ordinary skill in the art. In addition, the test is fundamentally fair to the patent applicant, because the applicant controls the scope of the art to which the presumption applies by defining in the original application and the subsequent application process the proper scope of its invention. The test also appropriately recognizes that the applicant is in the best position to balance its interest in obtaining broad patent coverage against the risk of a successful obviousness challenge resulting from an expansive definition of the relevant analogous art. If an applicant narrows the field of analogous art to avoid a presumption of combinability, the representation will bind the applicant and can be used to restrict the scope of the patent's claims. *See* 35 U.S.C. § 112. Thus, because the

---

of ordinary skill in the pertinent art." 383 U.S. at 17. In addition, "[s]uch secondary considerations as commercial success, long felt but unsolved needs, failure of others, etc., might be utilized to give light to the circumstances surrounding the origin of the subject matter sought to be patented. As indicia of obviousness or nonobviousness, these inquiries may have relevancy." *Id.* at 17-18.

applicant defines the boundaries of the presumption through the scope of its invention, the proposed test appropriately encourages the applicant to arrive at the proper claim scope for its invention and to do so as part of the public record of the patent application.

B. The Rebuttable Presumption Approach Is Consistent With § 103 And This Court's Precedents.

IBM's proposed application of the teaching-suggestion-motivation test is superior to the other approaches proposed to the Court because it both preserves the intent of § 103 and is consistent with this Court's precedents.

First, the rebuttable presumption test is consistent with the language and intent of § 103(a). By its terms, § 103(a) provides that non-obviousness is judged "at the time the invention was made" according to what would have been known to a person of "ordinary skill in the art." 35 U.S.C. § 103(a). Presuming that references in the analogous art are combinable gives content and meaning to § 103's reference to a person of "ordinary skill in the art," because analogous art is what such a person would review as being reasonably pertinent to the problem based on the judgment of a person having ordinary skill in the art. *See Oetiker*, 977 F.2d at 1447. Moreover, the person having ordinary skill in the art is presumed to be a "mythically omniscient worker" with "perfect knowledge of all the pertinent prior art—however obscure its source." 2 CHISUM, *supra*, § 5.04[1][b] (citing *Wood*, 599 F.2d 1032). Thus, a presumption that analogous art references would be combined reflects the reality of the thought process of one ordinarily skilled in the art in view of the existing presumption that a person skilled in the art has

knowledge of that art. *See Oetiker*, 977 F.2d at 1447; *Wood*, 599 F.2d at 1036.[8]

Applying a rebuttable presumption is also consistent with Congress's intent to distinguish between novelty and non-obviousness. *See supra* pp. 7-9. The presumption establishes a clear body of art in which there is no need to

---

[8] Applying IBM's proposed rebuttable presumption in infringement litigation is consistent with the statutory presumption of validity that attaches to issued patents. *See* 35 U.S.C. § 282. The proposed presumption does *not* establish obviousness, and thus invalidity, for two reasons. First, the proponent of the combination would still have to show that the combination results in the claimed invention. Second, if it does, the presumption would establish a motivation to combine references, placing the burden of coming forward with rebuttal evidence on the patent holder. The requirement to show that every element of the claimed invention is found in the prior art references and ultimate burden of persuasion remains on the patent challenger. The presumption that references within the prior art are combinable is thus consistent with the establishment of a *prima facie* case of obviousness. *See, e.g.*, *Recombinant Products & Nonobviousness: A Typology*, 13 SANTA CLARA COMPUTER & HIGH TECH. L.J. 1, 17-18 (Feb. 1997) ("*Recombinant Products*") (describing instances in which a presumption of obviousness has been applied in chemical compound cases, resulting in the establishment of a *prima facie* case of obviousness). It is well-established, moreover, that evidentiary burden-shifting in general is consistent with the presumption of validity. *See Apotex USA, Inc. v. Merck & Co.*, 254 F.3d 1031, 1037-38 (Fed. Cir. 2001) (explaining that rules allowing for a *prima facie* showing of invalidity are "in accordance with the statutory presumption in 35 U.S.C. § 282, [because] the ultimate burden of persuasion remains with the party challenging the validity of the patent"); *Innovative Scuba Concepts, Inc. v. Feder Indus., Inc.*, 26 F.3d 1112, 1115 (Fed. Cir. 1994) ("While a patentee may have the burden of going forward with rebuttal evidence once a challenger presented a *prima facie* case of invalidity, the presumption of validity remains intact and the ultimate burden of proving invalidity remains with the challenger throughout the litigation.").

prove a specific teaching or motivation to combine references, thus giving weight to "that which could readily be deduced from publicly available material by a person of ordinary skill in the pertinent field of endeavor." *Bonito Boats*, 489 U.S. at 150.

Second, the rebuttable presumption's focus on the patent application process is consistent with this Court's precedents. In *Graham*, this Court observed that § 103 analysis is based on "the pertinent art existing at the time the invention was made and [is] implicitly tied to advances in that art." 383 U.S. at 14. The Court paid particular attention to how the applicant identified (or failed to identify) the invention during the application process, and rejected the applicant's argument concerning a distinguishing feature of the claimed invention because the feature was not "hinted at in the specifications of the patent. If this were so vital an element in the functioning of the apparatus, it is strange that all mention of it was omitted." *Id.* at 25 (internal quotation marks and citation omitted). Thus, *Graham* illustrates that the identification of, or failure to identify, the distinguishing features of an invention during the application process is pertinent to the evaluation of obviousness. *See id.* at 33 ("It is, of course, well settled that an invention is construed not only in the light of the claims, but also with reference to the file wrapper or prosecution history in the Patent Office.").

By establishing a presumption based on the analogous art, the rebuttable presumption test encourages the applicant to provide a clear record for determining the scope of analogous art and to identify with specificity the distinguishing features of the invention in order to limit the application of the presumption during and after prosecution. And, by encouraging the patent applicant to refine the scope of the relevant analogous art through the patent application process, the rebuttable presumption approach results in the clear and objective development in the public record of the scope of art to which the presumption applies. Thus,

members of the public and reviewing courts can later judge the relevant analogous art with far greater certainty when evaluating whether the presumption of combinability should apply, determining obviousness generally, or establishing the scope and meaning of the claims.

The rebuttable presumption approach is also consistent with this Court's approach to presumptions in the patent context. In *Warner-Jenkinson Co., Inc. v. Hilton Davis Chemical Co.*, 520 U.S. 17 (1997), this Court considered whether a patent owner is estopped from relying on the doctrine of equivalents when the owner purposefully narrows the scope of its claims during the patent application process but fails to explain why. The Court held that "[w]here no explanation is established . . . the court should *presume* that the patent applicant had a substantial reason related to patentability for including the limiting element added by amendment." *Id.* at 33 (emphasis added). Subsequently, in *Festo Corp. v. Shoketsu Kinzoku Kogyo Kabushiki Co., Ltd.*, 535 U.S. 722, 740 (2002), the Court extended this rebuttable presumption to the scope and meaning of the amendment itself, holding that "[a] patentee's decision to narrow his claims through amendment may be *presumed* to be a general disclaimer of the territory between the original claim and the amended claim." *Id.* (emphasis added).

Thus, this Court has previously found the application of a presumption appropriate in patent jurisprudence for reasons that are particularly compelling here. The presumption IBM proposes will give "proper deference" to the importance of "providing public notice," and "to the primacy of the PTO in ensuring that the claims allowed cover only subject matter that is properly patentable in a proffered patent application." *Warner-Jenkinson*, 520 U.S. at 33-34. Under the proposed test, the patent applicant controls the scope of art to which the presumption applies and bears the burden of rebutting the presumption. The public record of the application process will more definitively reflect the valid scope of the claimed

invention, enabling the patent process to fulfill its important public notice function and shifting the focus of the non-obviousness test from the litigation process to the patent application process.

C. The Rebuttable Presumption Test Provides A Workable Alternative That Advances Sound Patent Policy.

Applying a rebuttable presumption of combinability where the elements of an invention are all disclosed in the analogous art is a practically-applicable test that will provide notice to the public of a patent's valid scope and promote fairness and certainty in the patent system, thus encouraging innovation.

The rebuttable presumption test can be easily applied. The rebuttable presumption IBM proposes can be easily applied by patent examiners, courts, practitioners, and the public, because it builds on familiar existing practices. As explained in the preceding section, the application of a rebuttable presumption is nothing new in patent practice, *see* 35 U.S.C. § 282 (establishing a statutory presumption of patent validity); *Warner-Jenkinson*, 520 U.S. at 33-34; *Festo Corp.*, 535 U.S. at 740-41; *see also Recombinant Products*, *supra*, pp. 17-18 (explaining historical application of rebuttable presumption of obviousness in cases involving chemical analogs). The concept of analogous art, the standard by which the presumption is measured, is similarly well established, *see supra* pp. 18-19. Finally, because IBM's test impacts only the evidentiary requirements of the teaching-suggestion-motivation test, it preserves the familiar and important legal concepts underlying that test, and thus preserves settled expectations of the law.

The test provides clarity in the patent process. In addition to its practical advantages, the rebuttable presumption test focuses on promoting the Patent Act's overarching goal of "clarity" in patent rights—a clear benefit

over the Solicitor General's test. *See Festo Corp.*, 535 U.S. at 730. Because the patent and its prosecution history are in the public record and define the analogous art from which any rebuttable presumption is drawn, the public will be well informed of the parameters of the non-obviousness analysis, and inventors and interested members of the public (including alleged infringers) will be able to concretely evaluate patent validity based on non-obviousness without resort to litigation, ultimately promoting efficient innovation. *See* NRC Study at 46-47. This is a tremendous benefit because, as this Court has observed, "[i]f competitors cannot be certain about a patent's extent, they may be deterred from engaging in legitimate manufactures outside its limits, or they may invest by mistake in competing products that the patent secures." *Festo Corp.*, 535 U.S. at 732.

Although the proposed test will reduce the number of meritless patents for trivial combinations, proper application of the proposed presumption will not cause meritorious inventions to become unpatentable. The presumption will simply require the applicant to explain in greater detail the scope of the invention and the reasons why the cited references would not be combined. One of the recognized shortcomings of the current patent system is that it does not result in well-described patents. FTC Report Ch. 4, at 8-9 Allocating burdens per the proposed presumption will lead to a more robust application process and better-quality, more definite patents.

IBM's test also avoids the problem of hindsight that plagues KSR's proposed "synergy" test. The rebuttable presumption applies to references within the relevant analogous art, the scope of which is controlled by the applicant during the application process. As such, the combination of art is not premised on a reconstruction based upon a subjective, post-hoc impression of "invention" by an examiner or judge. The reviewing entity cannot pick and choose among references to combine, but is limited to the

particular field defined by the applicant. A resulting determination of combinability can also be rebutted by evidence showing that the person of ordinary skill in the art would not have been motivated to make it.

The rebuttable presumption test is fair. Finally, IBM's test is fair to all parties and across the various fields of invention. The test is fair to patent applicants because they control the breadth of the analogous art through their representations to the PTO. The test is also fair to the interested public and alleged infringers, because it removes from patentability those developments fairly described in analogous prior art, balances the applicant's interest in obtaining broad patent rights against the risk of invalidity under § 103 and ensures that the applicant will strike that balance in the public record, thus more clearly defining valid claim scope and providing notice to the public.

With respect to fairness across fields, it is well recognized that innovators in different fields encounter different patent examination standards for non-obviousness. *See* Dan L. Burk & Mark A. Lemley, *Is Patent Law Technology-Specific?*, 17 BERKELEY TECH. L.J. 1155, 1160-85 (2002).[9] The objective of non-obviousness jurisprudence is to allow for flexibility in the application of the law by focusing on the person having ordinary skill in the art, a standard that will differ by field. A rebuttable presumption based on the

---

[9] Thus, innovators in some fields, in particular, chemical manufacturers, are promoting a stricter test for obviousness, while others are promoting a more lenient test based on interests specific to their respective industries. *See, e.g.*, NRC Study at 90-93. For example, chemical manufacturers often support the Federal Circuit's stringent obviousness evidentiary requirement, because chemical elements are well known, and the industry's goal is to find new ways to combine them. *Id.* at 91.

analogous art will be fair to all industries and will retain the field-sensitivity objective of current jurisprudence. The concept of the relevant "field" of analogous art is sensitive to the particular industry in which the patented invention will be practiced. In the chemical area, for example, a patent applicant can provide a precisely detailed description of the claimed invention, including narrow claims, resulting in a narrow field of analogous art to limit the presumption of combinability for obviousness. Also, the rebuttable presumption test fixes the determination of the scope of analogous art during the patent application process and does not allow for examination of post-issuance developments in the field. As industries and innovations become increasingly cross-disciplinary in nature, the analogous field of art concept can change, but the field in any particular patent application will be fixed during the patent application process. This approach is consistent with the Court's admonition that:

> The [non-obviousness] standard has remained invariable in this Court. Technology, however, has advanced—and with remarkable rapidity in the last 50 years. Moreover, the ambit of applicable art in given fields of science has widened by disciplines unheard of a half century ago. It is but an evenhanded application to require that those persons granted the benefit of a patent monopoly be charged with an awareness of these changed conditions. The same is true of the less technical, but still useful arts. He who seeks to build a better mousetrap today has a long path to tread before reaching the Patent Office.

Graham, 383 U.S. at 19. Thus, IBM's test is flexible enough to apply fairly to all industries and over time.

****

The Federal Circuit's teaching-suggestion-motivation test is clearly broken. The difficult question is how to fix it, because any new test for non-obviousness must be clear,

certain, practically-applicable, and sensitive to the settled expectations of the law. IBM's approach provides that clarity in a test that builds upon existing precedents and practices in a manner consistent with the Patent Act.

CONCLUSION

The Federal Circuit's decision should be vacated and the case remanded for further proceedings.

Respectfully submitted,

DAVID J. KAPPOS
MARC A. EHRLICH
MANNY W. SCHECTER
IBM CORPORATION
One North Castle Drive
Armonk, NY 10504
(914) 765-4343

MARIAN UNDERWEISER
IBM CORPORATION
Rte 134/1101 Kitchawan Rd
Yorktown Heights, NY 10598
(914) 945-2756

TRACI L. LOVITT
(*Counsel of record*)
JONES DAY
222 East 41st Street
New York, NY 10017
(212) 326-3939

GLEN D. NAGER
GREGORY A. CASTANIAS
JONES DAY
51 Louisiana Ave., N.W.
Washington, DC 20001
(202) 879-3939

KENNETH R. ADAMO
CALVIN P. GRIFFITH
JONES DAY
North Point
901 Lakeside Avenue
Cleveland, OH 44114
(216) 586-3939

Counsel for Amicus Curiae

August 2006

139 E

No. 04-1350

FILED
OCT 16 2006
OFFICE OF THE CLERK
SUPREME COURT, U.S.

In the Supreme Court of the United States

KSR INTERNATIONAL CO.,
Petitioner,

v.

TELEFLEX INC. and
TECHNOLOGY HOLDING CO.,
Respondents.

On Writ of Certiorari to the United States Court of Appeals for the Federal Circuit

BRIEF *AMICI CURIAE* OF MICHELIN NORTH AMERICA, INC., ARVINMERITOR, INC., AND NARTRON CORPORATION IN SUPPORT OF RESPONDENT

RICHARD W. HOFFMANN*
WARN HOFFMANN
MILLER & LALONE PC
691 N. SQUIRREL ROAD
SUITE 140
AUBURN HILLS, MI 48326
(248) 364-4300
* *Counsel of Record*

CARY W. BROOKS
REISING ETHINGTON
BARNES KISSELLE PC
201 W. BIG BEAVER ROAD
SUITE 400
TROY, MI 48084
(248) 689-3500

Counsel for Amici Curiae

Becker Gallagher · Cincinnati, OH · Washington, D.C. · 800.890.5001

TABLE OF CONTENTS

Page(s)

TABLE OF AUTHORITIES iii

STATEMENT OF INTEREST OF *AMICI CURIAE* . . . 1

SUMMARY OF ARGUMENT 2

ARGUMENT 3

I. WHY IS AN APPROACH FOR DETERMINING OBVIOUSNESS NECESSARY 3

A. The Origin Of 35 U.S.C. §103 3

B. Direction Provided By *Graham* 5

II. THE TEACHING-SUGGESTION-MOTIVATION APPROACH IS CONSISTENT WITH THE STATUTE AND THE PRECEDENT OF THIS COURT 8

A. Nonobviousness Jurisprudence At The Federal Circuit 8

B. The Federal Circuit Precedent Is Consistent With *Graham* And The Statute 9

C. The Teaching-Suggestion-Motivation Approach Is Flexible 11

III. THIS COURT HAS USED A TEACHING-SUGGESTION-MOTIVATION APPROACH 13

IV. THE APPROACHES URGED BY PETITIONER DIVERGES FROM THIS COURT'S DECISIONS AND ARE UNWORKABLE 15

A. Synergism Is A Defective Approach 15

B. Synergism Alone As A Test For Obviousness Has Never Been Adopted By This Court 17

C. The Capability Approach Is Contrary To Authority 21

V. THE IMPACT ON PATENT PROSECUTION IF THE CURRENT APPROACH IS MODIFIED 24

VI. REASONS FOR MAINTAINING THE CURRENT TEACHING-SUGGESTION-MOTIVATION APPROACH 25

CONCLUSION 29

TABLE OF AUTHORITIES

Page(s)

CASES:

Alza Corp. v. Mylan Labs., No. 06-1019,
2006 WL 2556356 (Fed.Cir.Sept.6,2006) 8, 12

Anderson's-Black Rock v. Pavement Salvage Co.,
396 U.S. 57 (1969) 18

Atlantic Works v. Brady,
107 U.S. 192 (1883) 22

B.G. Corp. v. Walter Kidde & Co.,
79 F.2d 20 (2d Cir.1935) 16-17

Cross Med. Prods., Inc. v. Medtronic Sofamor Danek, Inc.,
424 F.3d 1293 (Fed.Cir.2005) 8, 12

Dennison Mfg. Co. v. Panduit Corp.,
475 U.S. 809 (1986) 7, 25

Diamond Rubber Co. of New York v. Consolidated Rubber Tire Co.,
220 U.S. 428 (1911) 23

Dystar Textilfarben GmbH & Co. Deutschland KG v. C.H. Patrick Co. et al, No. 06-1088,
2006 WL 2806466 (Fed.Cir.Oct.3,2006) 8, 12

Graham v. John Deere Co.,
383 U.S. 1 (1966) . . . . . *passim*

Hotchkiss v. Greenwood,
52 U.S. (11 How.) 248 (1851) 3, 5, 21

In re Bozek,
416 F.2d 1385 (C.C.P.A.1969) 12

In re Fay,
347 F.2d 597 (C.C.P.A. 1965) 20

In re Huellmantel,
324 F.2d 998 (C.C.P.A.1963) 19

In re Kahn,
441 F.3d 977 (Fed.Cir.2006) 8, 10

In re Piasecki,
745 F.2d 1468 (Fed.Cir.1984) 9, 24

Kimberly-Clark v. Johnson and Johnson,
745 F.2d 1437 (Fed.Cir.1984) 22

McLain v. Oltmayer,
141 U.S. 419 (1891) 3

Republic Indus., Inc. v. Schlage Lock Co.,
592 F.2d 963 (7th Cir 1979) 16

Sakraida v. Ag Pro, Inc.,
425 U.S. 273 (1976) 18

Stratoflex, Inc. v. AeroQuip Corp.,
713 F.2d 1530 (Fed.Cir.1983) 15, 16

Topliff v. Topliff,
145 U.S. 156 (1892) 13

United States v. Adams,
383 U.S. 39 (1966) 2, 13, 14, 15, 17

Webster Loom Co. v. Higgins,
105 U.S. 580 (1881) 22

CONSTITUTIONAL PROVISIONS:

U.S. Const. Art. I, §8, cl. 8 1

STATUTES:

35 U.S.C. §103 . . . . . *passim*

35 U.S.C. §282 9

LEGISLATIVE MATERIALS:

H.R. Rep. No. 1923 (1952) 4

RULE:

Supreme Court R. 37.6 1

OTHER AUTHORITIES:

Donald S. Chisum., 2 *Chisum on Patents*, (2005)
§5.02[1] 3
§5.04[a] 3

Howard T. Markey, *Why Not the Statute?*,
65 JPOS, No. 6, 333-340 (1983) 16

Giles Rich, *Escaping the Tyranny of Words - Is Evolution in Legal Thinking Possible?*,
60 JPOS 71, May-June/APLA Bull.237,
3:316-3:318 (1978) 17-18, 20, 21

Robinson, *The Law of Patents and Useful Inventions* (1890), §§237-244 21

The J.I. Rodale Synonym Finder, (1979) 13

STATEMENT OF INTEREST OF *AMICI CURIAE*

Michelin North America, Inc., ArvinMeritor, Inc. and Nartron Corporation are automotive suppliers.[1] The innovations of the *amici* have resulted in the issuance of hundreds, if not thousands, of patents which, consistent with the constitutional purpose of the Patent Statute, have resulted in further technological advances and as such have promoted "the progress of Science and the Useful Arts." U.S Const. Art. I, §8 cl. 8. The technological advances protected by the patent system have allowed *amici* to compete effectively in the highly competitive automobile industry by securing for them rights to their respective inventions. *Amici*'s patents have allowed them to maintain a market position which provides an avenue to recoup the significant investment it has made in research and development. Continued protection of their respective developments is necessary for *amici* to continue to provide innovative solutions for the automotive industry.

Because many of the patents received by *amici* relate to incremental advances in the art, they can fairly be characterized as "combination" patents. These incremental developments typically result in new and nonobvious inventions. *Amici* believe that nonobvious advances in the art should continue to be protected as they have. *Amici* also have an interest in ensuring that patents for obvious inventions are not allowed to remain as an impediment to their respective businesses.

---

[1] Pursuant to this Court's Rule 37.6, we note that no part of this brief was authored by counsel for any party, and no person or entity other than *amici curiae* made a monetary contribution to the preparation or submission of the brief. The brief is filed with the consent of the parties, both of which have consented to the filing of any briefs of *amicus curiae* in this case.

SUMMARY OF ARGUMENT

This Court's decision in *Graham v. John Deere Co.*, 383 U.S. 1 (1966) provides the factual framework that must be studied in making the obviousness determination. However, the *Graham* Court did not specifically articulate an approach for evaluating the factual findings when making the legal judgment of whether the invention would have been obvious to a person of ordinary skill in the art at the time of the invention.

The Federal Circuit has adopted the teaching-suggestion-motivation approach for evaluating the *Graham* factors. Nothing in *Graham* or 35 U.S.C. §103 is inconsistent with the Federal Circuit's approach. The approach provides a consistent manner of assessing each of the *Graham* inquiries in reaching the obviousness conclusion. The teaching-suggestion-motivation approach to the nonobviousness inquiry was performed in *United States v. Adams*, 383 U.S. 39 (1966). Further, the approach rightly focuses on the requirements of 35 U.S.C. §103, namely that the obviousness determination is made as by one of ordinary skill in the art at the time of the invention. It also forces the decision maker to articulate the basis for any conclusion.

Petitioner has urged a synergism standard for combination patents. Nothing in 35 U.S.C. §103 calls for special treatment of combination patents. Synergism, by itself, is but one factor that should be considered in the overall legal analysis of obviousness. It cannot drive the inquiry.

Casting aside the Federal Circuit's teaching-suggestion-motivation approach will have draconian results. Tens of thousands of patents have issued in reliance on the approach.

Discarding the approach in its entirety will cast doubt on each of these patents.

ARGUMENT

I. WHY IS AN APPROACH FOR DETERMINING OBVIOUSNESS NECESSARY

A. The Origin Of 35 U.S.C. §103

Before the enactment of the present statute in 1952, patentability of an invention required novelty and utility by statute. But novelty and utility were not enough. *Hotchkiss v. Greenwood*, 52 U.S. (11 How.) 248 (1851) and its progeny added a third requirement --"invention." Over time, it became clear that the term "invention" was ambiguous and subject to the diverse interpretations of judges. *McLain v. Oltmayer*, 141 U.S. 419, 426-427 (1891):

> The truth is, the word cannot be defined in such manner as to afford any substantial aid in determining whether a particular device involves an exercise of the inventive faculty or not.

Because courts had difficulty in consistently applying the third requirement of "invention," a number of "negative rules" and exceptions to the negative rules for testing the presence of a patentable invention were developed. See, e.g., Donald S. Chisum, *2 Chisum on Patents*, §§5.02[1], 5.04[a] (2005). But these negative rules did not always do justice and were not always easy to apply. In an effort to remedy the problem, to provide uniformity, definiteness, stabilizing effect, and to

minimize the great departure which appeared in some cases,[2] Congress enacted 35 U.S.C. §103.[3]

By statute, nonobviousness became the focus of the third requirement of patentability and supplanted the vague concept of "invention." The statute answered many important questions regarding the patentability analysis, such as: obvious of what,[4] to whom,[5] at what time,[6] and in view of

---

[2] H.R. Rep. No. 1923, 82nd Cong. 2d Sess., on H.R. 7794, May 12, 1952, 5, 7, and 18.

[3] 35 U.S.C. §103 provides:

> §103. Conditions for patentability; non-obvious subject matter
>
> A patent may not be obtained though the invention is not identically disclosed or described as set forth in section 102 of this title, if the differences between the subject matter sought to be patented and the prior art are such that the subject matter as a whole would have been obvious at the time the invention was made to a person having ordinary skill in the art to which said subject matter pertains. Patentability shall not be negatived by the manner in which the invention was made.

[4] Of the claimed invention as a whole.

[5] To a person of ordinary skill in the art.

[6] At the time the invention was made. The most difficult aspect of the decision making process is the requirement that the decision maker must cast his mind back to the time the invention was made in order to arrive at an ultimate conclusion regarding nonobviousness. Hindsight evaluation of the invention is a trap that is easy for the decision maker to fall into.

what?[7] Although 35 U.S.C. §103 brought relatively more clarity to the decision making process, clarification as to the meaning of the statute in the decision making process (like the meaning of court decisions) became a work in process of the courts.

Since *Hotchkiss v. Greenwood* and the enactment of 35 U.S.C. §103, this Court has not specifically articulated an approach for evaluating the factual factors relevant to the obviousness inquiry that would preclude patentability. From an ideological standpoint, Congress was charged with implementing the objective of the Constitution to promote the progress of science and useful arts. In so doing, Congress enacted 35 U.S.C. §103 as the sole basis for determining inventions worthy of patent protection from those that are obvious. The goal aspired was only to allow patents for nonobvious inventions thereby serving to advance the state of the useful arts. Practical implementation of an approach to achieve the ideological result has been elusive and results in inconsistent applications of the nonobviousness test.

B. Direction Provided By *Graham*

In *Graham v. John Deere Co.*, 383 U.S. at 17-18, the Court laid out the factual predicate for an obviousness determination:

> Under 35 U.S.C. §103, the scope and content of the prior art are to be determined; differences between the prior art and the claims it issue are to be ascertained; and the level of ordinary skill in the art resolved. Against this backdrop, the obviousness or

---

[7] The prior art.

> nonobviousness of the subject matter is determined. Such secondary considerations as commercial success, long felt but unresolved needs, failure of others, etc., might be utilized to give weight to the circumstances surrounding the origin of the subject matter sought to be patented. As indicia of obviousness or nonobviousness, these inquiries may have relevancy.

Thus, the *Graham* court provided some direction to the nonobviousness analysis by specifying several factual inquiries to be considered in determining whether to the invention is obvious. This Court directed the decision maker to make the ultimate decision of nonobviousness against the background of the facts developed under these three areas of evidentiary inquiry. Even though intending to lay a factual framework that must be strictly followed, the *Graham* court recognized that obviousness is not a question on which there is likely to be uniformity of thought in every given factual context. *Id.* at 18-19. *Graham* also recognized the danger of hindsight and accordingly directed the evidentiary inquiry to include a fourth area: other indicia of nonobviousness.[8] *Id.* at 18.

Beyond laying out the factual predicates for finding obvious or nonobviousness of an invention, the *Graham* court provides no guidance on how the nonobviousness determination is made. There is no stated approach for evaluating these factual findings.

The *Graham* factors in and of themselves are separate factual predicates that can be found independently from one another. Considered in isolation, the *Graham* factual

---

[8] This is sometimes referred to as the fourth *Graham* factor.

inquiries are not helpful to reach the ultimate decision on obviousness. For example, in *Dennison Manufacturing Company v. Panduit Corp.*, 475 U.S. 809, 810 (1986), the Court noted the district court properly reasoned that one may not simply choose isolated elements from the prior art and combine them so as to yield the invention in question if such a determination would not have been obvious at the time of the invention. Accordingly, mere identification of the scope and content of the prior art, by itself, cannot result in a finding of obviousness.

A necessary reason for a proper approach to determine obviousness is to provide uniform application of the nonobviousness standard. Simply allowing judges to determine obviousness without an approach for making that determination will reduce an obviousness analysis to an "I know it when I see it" analysis. Having a uniform approach will require courts to articulate the basis for its obviousness conclusion. Such an approach will provide patent applicants and litigants with a factual predicate that it can rebut by bringing forth evidence contrary to the stated basis for the obviousness assertion.

Some uniform approach to evaluating the *Graham* factors and interrelating them is necessary to consistently carry out the obviousness analysis. Nothing in *Graham* precludes the adoption of an approach that can be used to guide the obviousness conclusion, so long as that approach takes into account the requirements of 35 U.S.C. §103 and the *Graham* factual findings. In *Graham*, this Court concluded that the "inquiry which the Patent Office and the courts must make as to patentability must be beamed with greater intensity on the requirements of §103..." *Graham*, 383 U.S. at 19. A teaching-suggestion-motivation approach to the ultimate conclusion on nonobviousness accomplishes this mandate.

II. THE TEACHING-SUGGESTION-MOTIVATION APPROACH IS CONSISTENT WITH THE STATUTE AND THE PRECEDENT OF THIS COURT

A. Nonobviousness Jurisprudence At The Federal Circuit

In essence, the central issue in this case is whether the Federal Circuit's nonobviousness jurisprudence is consistent with the statute and the precedent of this Court. Several cases are illustrative. See, e.g., *Dystar Textilfarben GmbH & Co. Deutschland KG v. C.H. Patrick Co. et al*, No. 06-1088, 2006 WL 2806466 (Fed.Cir.Oct.3,2006); *Alza Corp. v. Mylan Labs.*, No. 06-1019, 2006 WL 2556356 (Fed.Cir.Sept.6,2006); *In re Kahn*, 441 F.3d 977 (Fed.Cir.2006); and *Cross Med. Prods., Inc., v. Medtronic Sofamor Danek, Inc.*, 424 F.3d 1293 (Fed.Cir.2005). These decisions focus on §103 and require a party asserting obviousness to articulate the basis on which it concludes that it would have been obvious to make the claimed invention. *In re Kahn*, 441 F.3d at 986. Articulation of only the facts uncovered by the first *Graham* factual inquiry, in a way that merely identifies where in the prior art each element of the claimed invention may be found, without more, is not sufficient to establish obviousness. *Id.* The Federal Circuit jurisprudence leaves open how the ultimate conclusion on nonobviousness might be articulated under any given set of facts. *Id.*[9] *In re Kahn*, 441 F.3d at 986 reiterates one

---

[9] This obviousness jurisprudence presumably leaves open the door for a patentability challenger to articulate a rational basis for a conclusion of obviousness by a means other than the teaching-suggestion-motivation approach that is founded in fact, focused on

practical approach on how to reach and articulate the obviousness or nonobviousness conclusion.

Requiring the patentability challenger to state a rational basis for the conclusion of obviousness is important. First, without a requirement for such an articulation, courts of review are left with no basis for determining whether the conclusion was correct. Second, the articulation requirement is necessary for the patentability challenger to carry his burden under the statute.[10] Third, the articulation requirement is necessary in order for the applicant or patentee to refute or rebut the underlying facts or rationale of the challenger with his own argument or evidence. Decisions that fail to articulate a basis are merely conclusory and cannot be adequately rebutted.

B. The Federal Circuit Precedent Is Consistent With *Graham* And The Statute

Making a determination based on what *would have been* obvious *at the time the invention was made* is the most difficult requirement of the decision making process under §103. This requires the decision maker to cast his mind back

---

the requirements of §103 and not based on hindsight. To date, *amici* have not seen such an alternative means for articulating a rational basis that meets such requirements nor is such a means immediately apparent.

[10] Under 35 USC §103, the burden of proof is on the Patent and Trademark Office to establish a *prima facie* case of obviousness. *In re Piasecki*, 745 F.2d 1468, 1472 (Fed.Cir.1984). Under 35 USC §282 a patent is presumed valid and thus a burden of proving invalidity by clear and convincing evidence is placed of a patent challenger.

to the time the invention was made -- a task easier said that done. *Graham* tells what features to look at, but not how to assess them. The teaching-suggestion-motivation approach does just that.

The Federal Circuit and its predecessors recognized the danger of a hindsight approach to assessing obviousness. In practice, Federal Circuit jurisprudence requires the patentability challenger to "explain the reasons one of ordinary skill in the art would have been motivated to select the references and to combine them to render the claimed invention obvious." *In re Kahn*, 441 F.3d at 986. Absent some other rational articulation founded in fact, when the challenger of patentability fails to explain the motivation, the suggestion or the teaching that would have led the skilled artisan at the time of the invention to the claimed combination at a whole, the presumption is that the conclusion was reached through the improper benefit of hindsight. *Id.* at 986-87. This is not a separate approach from the *Graham* inquiries. Rather, it simply is a practical approach to assessing them to assure that the nonobviousness analysis is evaluated from the correct perspective.

Amici believe that the teaching-suggestion-motivation approach to the ultimate conclusion on nonobviousness is subsumed in the inquiry laid out in *Graham*. *Graham* presumes the factors interrelate. Ultimately, the factors must serve the statutory end--to determine whether the subject matter as a whole would have been obvious to one skilled in the art at the time of the invention. The analysis necessarily requires inquiry into what the scope and context of the prior art taught or suggested to those skilled in the art. Without such assessment, the *Graham* factual inquiries do not accomplish the purpose of 35 U.S.C. §103. The mere identification of the level of skill in the art means nothing

unless the prior art is to be evaluated from the standpoint of that level of skill (i.e., what the prior art teaches the person of ordinary skill in the art).

Further, the teaching-suggestion-motivation approach focuses the inquiry on the requirements of §103 by ensuring that any obviousness conclusion is reached from the perspective of the time frame of when the time the invention was made, and not through hindsight. The teaching-suggestion-motivation approach takes into account each of the *Graham* factual findings. The approach ensures that the challenger of patentability identifies some evidence that supports a finding that the conclusion of obviousness was based on what a person of ordinary skill *would have been* led to do, and thus found obvious, *at the time the invention was made*. Then like any question of law, the decision maker must properly weigh all of the underlying facts in reaching the ultimate conclusion on nonobviousness. Any approach to reaching the obviousness conclusion that requires a patentability challenge to articulate a rational basis founded in fact for their conclusion of obviousness does not change a question of law into a question of fact.

C. The Teaching-Suggestion-Motivation Approach Is Flexible

The teaching-suggestion-motivation approach is not rigid in its application. The teaching-suggestion-motivation approach ensures that the decision is based on evidence and not on conclusory statements, speculation, conjecture, negative rules, rhetorical embellishments or talismanic slogans. Supporting evidence for the articulated rationale may be explicitly or implicitly found in the facts developed by the *Graham* inquiry. The supporting evidence, thus, need not contain an express teaching, suggestion or motivation.

Typically, evidence of motivation may be found in the first of the *Graham* factors - the scope and content of the prior art. In the absence of an express suggestion to combine, evidence of motivation may also be found in facts developed under the third *Graham* factor - the level of skill in the pertinent art. *Dystar Textilfarben GmbH*, No. 06-1088, slip op. at 26. The motivation can be implicit in the knowledge of one of skill in the art or in some cases, the nature of the problem to be solved. *Cross Med. Prods., Inc. v. Medtonic Sofamor Danek, Inc.*, 424 F.3d at 1321. Evidence supporting motivation may come from testimony of persons skilled in the art, *Alza Corp. v. Mylan Labs.*, No. 06-1019, slip op. at 13, or from the application or patent itself. *Cross Med. Prods., Inc.*, 424 F.3d at 1323. Motivation can even be founded in common sense. *In re Bozek*, 416 F.2d 1385 (C.C.P.A.1969). Thus, the Federal Circuit approach to evaluating obviousness is flexible both in the rationale required and the means of providing evidence necessary to support the ultimate conclusion of obviousness.

The Federal Circuit has been criticized by some commentators in rigidly adhering its teaching-suggestion-motivation approach to determining obviousness. *Dystar Textilfarben GmbH*, No. 06-1088, slip op. at 16-23. The criticisms are based largely on the misreading of selective quotations from certain cases. Contrary to the criticisms, the Federal Circuit has consistently and flexibly applied its approach. The criticism should properly lie not with the approach, but with the failure of patentability challengers to provide supporting evidence or adequately explain their rationale supporting the obviousness conclusion. *Id.* Petitioner and some *amici* argue the approach lowers the standard of patentability. But, the approach itself does not lower the standard for patentability.

III. THIS COURT HAS USED A TEACHING-SUGGESTION-MOTIVATION APPROACH

Contrary to the contention of Petitioner and several *amici* on behalf of Petitioner, the teaching-suggestion-motivation approach to the ultimate conclusion on nonobviousness is not a creation solely of the Federal Circuit and its predecessors. Although cloaked in different terms, the Court has, at least once, used a teaching-suggestion-motivation approach in making the ultimate conclusion on nonobviousness.[11] In *United States v. Adams*, 383 U.S. 39 (1966), the patent at issue involved a battery comprised of two electrodes – one made of magnesium and the other of cuprous chloride. The electrodes were placed in a container with an electrolyte that could be water or salt water. In reviewing the scope and content of the one of the prior art references, the Court took note that a Wood reference recognized that the difficulty with magnesium electrodes is their susceptibility to chemical corrosion and that there "is no *indication* of its use with cuprous chloride, nor was there any *indication* that magnesium battery could be water activated." (emphasis added). *Id.* at 46 It is important to note that the term "indication" is synonymous with the term "suggestion." *The J.I. Rodale Synonym Finder*, (1979). With respect to a Codd reference, the Court found, *Id.* at 46-47:

> In short, Codd *indicates,* by inference only that magnesium is a theoretically desirable electrode by virtue of its highly electropositive character. He *does*

---

[11] Evaluating the teachings and suggestions of prior art is not a new concept. In *Topliff v. Topliff*, 145 U.S. 156, 161 (1892), the Court evaluated what the prior art "would have suggested to a mechanic of ordinary intelligence."

> *not teach* that magnesium could be combined in a water-activated battery or that a battery using magnesium would have the properties of the Adams device. Nor does he *suggest,* as the Government indicates, that cuprous chloride could be substituted for silver chloride. He merely refers to the cuprous ion - a generic term which includes an infinite number of copper compounds - and in *no way suggests* that cuprous chloride could be employed in a battery. [emphasis added]

With respect to a Wensky patent, the court noted that "there is no *indication* that he *taught* a water-activated system or that magnesium could be incorporated in a battery." *Id.* at 67 (emphasis added).

The Court reviewed the scope and content of the prior art references to determine what the prior art taught or suggested. The Court noted that that the references and the accept wisdom and knowledge of persons skilled in the art "taken together, would ... *deter* any investigation into such a combination as is used in Adams." *Id.* at 52. (emphasis added). But, examining deterrence of investigation is the same as examining the motivation under the current approach. Being deterred from investigating a combination or making a combination is the antithesis of being motivated. The Court plainly applied the teaching-suggestion-motivation approach to reaching the ultimate conclusion of nonobviousness in

Adams without specifically articulating it in those terms.[12] The Solicitor so much as agrees.[13]

IV. THE APPROACHES URGED BY PETITIONER DIVERGES FROM THIS COURT'S DECISIONS AND ARE UNWORKABLE

A. Synergism Is A Defective Approach

In essence, Petitioner argues that synergism is the appropriate approach to be used when the obviousness of combination patents are implicated. See, e.g., Petitioner's Brief at 27-31. Petitioner, thus, argues a different requirement for finding obviousness in combination patents. However, 35 U.S.C. §103 does not provide that such a difference is to be applied when the invention is a combination. The statutory section mentions neither synergism nor combination patents. *Stratoflex, Inc. v. AeroQuip Corp.*, 713 F.2d 1530, 1540 (Fed.Cir.1983).

On its face, the statute mandates that all inventions are to be treated evenhandedly. Nothing in the statute focuses the inquiry on the age of the elements. The statute states that nonobviousness is to be determined with respect to the claimed subject matter as a whole, thus making the age of elements completely irrelevant. The statute is also completely devoid of any suggestion of a requirement of synergism for a combination of old elements.[14]

---

[12] *Adams* epitomizes the teaching-suggestion-motivation approach to the ultimate conclusion on nonobviousness.

[13] See Brief for the United States as *Amicus Curiae*, at p. 13.

[14] And *Graham* makes no mention of synergism.

Stratoflex, 713 F.2d at 1540 recognizes that virtually all patents are combination patents. That is, if one intends to describe patents having claimed inventions formed of a combination of elements. Virtually all mechanical structural arts are combination patents. All inventions are combinations because every invention is formed of old elements. The reality of this truism was insightfully articulated by former Federal Circuit Chief Judge, Howard T. Markey:

> Only God works from nothing. Man must work from old elements.[15]

The synergism test suffers from at least two defects.[16] First, the test looks exclusively at the function of individual elements of the combination after they are combined and thus is necessarily premised on the assumption that it was obvious to take the known elements and combine them. But the very choice of elements to be combined may not be obvious. As Judge Hand has noted in *B.G. Corp. v. Walter Kidde & Co.*, 79 F.2d 20, 22 (2d Cir.1935):

> All machines are made up of the same elements; rods, pawls, pitmans, journals, toggles, gears, cams, and the like, all acting their parts as they always do and always must. All compositions are made of the same substances, retaining their fixed chemical properties. But the elements are capable of an infinity of permutations and the selection of that group which proves serviceable to a given need may require a high

---

[15] *Why Not the Statute?,* Howard T. Markey, 65 JPOS, No.6, 333-340 (1983).

[16] *Republic Indus., Inc. v. Schlage Lock Co.*, 592 F.2d 963 (7th.Cir.1979).

> degree of originality. *It is that act of selection which is the invention.* [emphasis added]

True synergism would rarely be obtainable in a mechanical case. Thus, most often a synergistic result will not be obtained although an invention would not have been obvious to one of ordinary skill in the art at the time of the invention.

The second and more critical defect with synergism is that it is not consistent with §103 which mandates that the courts and the Patent Office are to view the invention from the vantage point of a person skilled in the art *at the time the invention was made*. From that perspective, the question is whether the level of skill in the art was such that the combining of the elements in the manner claimed *would have been* obvious, not in retrospect, but at the time it was done by the inventor. As this Court stated in *Adams*, 383 U.S. at 50:

> It begs the question *** to state merely that magnesium and cuprous chloride were individually known battery components. If such a combination is novel, the issue is whether *bringing them together* as taught by [the inventor] was obvious in the light of the prior art. [emphasis added]

But synergism focuses exclusively on the performance of the elements *after* the combination has been made and without regard to the obviousness or nonobviousness of making the combination at the time of the invention.

B. Synergism Alone As A Test For Obviousness Has Never Been Adopted By This Court

As aptly noted by Giles Rich in *Escaping the Tyranny of Words - Is Evolution in Legal Thinking Possible?*, 60 JPOS

71, May-June/APLA Bull.237, 3:316-3:318 (1978), sometimes zealous attorneys bent on winning or best representing the business interest of their client scour the decisions of courts looking for any words or phrases that could possibly support their position. Often words and phrases in decisions are taken out of context and blown out of proportion. Consequently, attorneys paste copied words into their briefs, these words and phases then make their way into the decisions, and are passed on from one decision to the next, sometimes leading to questionable decisions. Instead of focusing the inquiry on the requirements of §103, Petitioner wishes to supplant the decision making process by relying on long defunct negative rules of patentability. By arguing passing comments to synergism in two of the Court's cases, Petitioner seeks to resurrect a negative rule of patentability (i.e., that there is no patentability for a combination absent synergism) in direct contravention of *Graham* which states the focus is on the statute. *Amici* pray that this Court will pen a once and for all death blow to the argument that synergism is a condition for patentability.

Contrary to Petitioner's assertion, the Courts' decisions in *Anderson's-Black Rock v. Pavement Salvage Co.*, 396 U.S. 57 (1969) and *Sakraida v. Ag Pro, Inc.*, 425 U.S. 273 (1976), did not adopt a synergism requirement for patentability for combination patents. In each of the cases, the Court undertook the appropriate *Graham* factual inquiry. After having reached the obviousness conclusion using the factual predicates, the *Sakraida* court merely concluded that the finding of the Court of Appeals regarding synergism was not correct. 425 U.S. at 282. In *Anderson's-Black Rock*, the Court having concluded that the invention was obvious, looked to see if any synergism may have been present which would have otherwise been considered as a factor in their decision. 396 U.S. at 61. As evaluated by the Court,

synergism was applied as a secondary consideration of the type that may be looked into in evaluating the overall conclusion of obviousness.[17] This view is consistent with earlier decisions of the Court of Custom Appeals.

Synergism can have a place in the obviousness analysis. Synergism can be one factor to be considered in the ultimate determination of obviousness. The Court of Custom Appeals in *In re Huellmantel*, 324 F.2d 998, 1003 (C.C.P.A.1963) recognized that synergism is merely a factor to be considered in the ultimate determination of obviousness. This is important because synergism per se does not confer patentability. Synergism can be expected or unexpected. *Id.* That is, a reasonably skilled artisan can anticipate that the combination of two references having a suggestion to combine will give a synergistic result. However, in such a case, the synergism obtained may not render the invention nonobvious.

Accordingly, synergism, by itself, does not necessarily confer patentability on an otherwise non-patentable invention. Rather, synergism is better looked at as another secondary consideration or indicia of nonobviousness. By evaluating synergism in this manner, it assumes its proper role in the obviousness analysis – it is one factor to be considered; but its presence or absence, by itself does not control the analysis. If Petitioner's proposal was to be adopted and synergism must be shown for a combination to be patentable, then this approach will effectively supplant the entire *Graham* analysis. That is, under Petitioner's approach, the presence or absence of synergism will be determinative of obviousness, regardless of the remainder of the *Graham* analysis.

---

[17] Synergism is discussed in connection with the other secondary considerations--long felt need and commercial success.

Synergism is also an inappropriate standard because it introduces a qualitative element into the analysis not present either in 35 U.S.C. §103 or *Graham*. Synergism implies that an improved result must be obtained to be patentable. However, "better" is not a requirement for patentability:

> [T]he statutory requirements for patentability are novelty, utility and unobviousness. We repeat here what we said there: "While it is true that proof that an invention is better or does possess advantages may be persuasive of the existence of any one or all of the foregoing three requirements, and hence may be indicative of patentability, Congress has not seen fit to make such proof a prerequisite to patentability."

In re Fay, 347 F.2d 597, 599 (C.C.P.A.1965)

Inventions comprising combinations of old elements, should be evaluated pursuant to 35 U.S.C. §103. No special rule of patentability should apply. Although the existence of a new function produced by the combination of elements might be entitled to considerable weight in determining obviousness, the absence of a new function does not necessarily render the invention unpatentable under the statute. Experts such as Professor Robinson acknowledge that not only can combinations of old elements be patentable,[18] but also that improvements in such combinations

---

[18] See also Giles Rich, *Escaping the Tyranny of Words – Is Evolution in Legal Thinking Possible?*, 60 JPOS 71, May-June/APLA Bull. 237, 3:316-3:318 (1978). Judge Rich characterizes Kodak's roller film camera as just a combination of old elements: a strip of paper, a film of cellulose nitrate, a photographic emulsion which had been used before on a glass support, a simple box, a shutter, winding spools, and a lens. Each

that involve changes in shape, size, capacity, proportions, arrangement and materials of the elements in the combination can be patentable in certain circumstances.[19] Synergism works to supplant the decision making process under 35 U.S.C. §103 and should be extinguished.

C. The Capability Approach Is Contrary To Authority

Petitioner relies on *Hotchkiss v. Greenwood* and its progeny (Petitioner's Brief at 25) for the position that patentability should be determined by what a person skilled in the art was capable of. But *Hotchkiss* does not stand for the proposition that patentability is to be determined by what someone was capable of. The Court characterized the invention at issue in *Hotchkiss*, 52 U.S. (11 How.) at 267 as involving the "work of the skilled mechanic," not that of an inventor. Justice Bradley shed light on that concept when he commented that the patent laws were not intended to grant

---

element performed the same function it had always performed in the prior art except that the photosensitive element, the film, was capable of being rolled up – an obviously desirable thing to do. That simple combination of old elements was not only patentable, but gave raise to a great US industry. Judge Rich also noted that the simple idea of putting photographic emulsion on a transparent support enabled Thomas Alva Edison to make the moving picture camera out of other old elements. All of the individual parts were lying around separately, the paper, celluloid, sensitive emulsion, plate cameras, and Geneva movement, spring motor, sprocket wheels and other mechanisms in the movie camera. According to the approaches to determining patentability advanced by Petitioner and several *amici*, Kodak and Edison should have been denied their patents.

[19] See Robinson, *The Law of Patents and Useful Inventions*, (1890), §§237-244.

patents for inventions that "naturally or spontaneously occur to any skilled mechanic or operator in the ordinary process of manufacture." *Atlantic Works v. Brady*, 107 U.S. 192, 200 (1883). These concepts are now embodied in §103. The concept of the "skilled mechanic" is embodied in "the person of ordinary skill in the art." See, *Kimberly-Clark v. Johnson and Johnson*, 745 F.2d 1437, 1454 (Fed.Cir.1984). The concept of what would "naturally or spontaneously occur" to that imaginary person is embodied in the term "obvious." The term "obvious" as used in the statute should be given its ordinary meaning. That is, the term "obvious" means readily apparent. Such an interpretation is consistent with the threshold perception level of what would "spontaneously occur" to a skilled mechanic, as expressed by Justice Bradley.[20]

There is absolutely no mention in §103 that the focus of the inquiry should be on what someone could have done or was capable of doing. Looking at what could have been done or what someone was capable of, divorces the decision process from the time frame requirement of §103. Such an approach is inherently an unbounded hindsight analysis. Rather, the requirements of §103 mandate that the focus should be what *would have been* obvious (i.e., readily apparent) to a person skilled in the art *at the time the invention was made.*

Petitioner's proposed "capable of" standard is contrary to authority. In *Webster Loom Co. v. Higgins,* 105 U.S. 580, 591 (1881), the Court recognized the impracticality of a "capable of" approach:

---

[20] It is recognized that often courts use the terms "obvious" or "obviousness" with reference to a legal conclusion.

> Now that it has succeeded, it may seem very plain to any one that he could have done it as well. This is often the case when inventions of the greatest merit. It may be laid down as a general rule, though perhaps not an invariable one, that if a new combination and arrangement of known elements produce a new and beneficial result, never attained before, it is evidence of invention.

This unworkable standard was reiterated in *Diamond Rubber Company of New York v. Consolidated Rubber Tire Company*, 220 U.S. 428, 434-35 (1911):

> Its simplicity should not blind us as to its character. Many things, and the patent law abounds in illustrations, seem obvious after they have been done, and, "in the light of the accomplished result," it is often a matter of wonder how they so long "eluded the search of the discoverer and set at definance [sic] the speculations of inventive genius." [citation omitted] Knowledge after the event is always easy, and problems once solved present no difficulties, indeed, may be represented as never having had any, and expert witnesses may be brought forward to show that the new thing which seemed to have eluded the search of the world was always ready at hand and easy to be seen by a merely skillful attention. But the law has other tests of the invention than [sic] subtle conjectures of what might have been seen and yet was not.

Starting with the completed invention will always lead to the result that it could have been done – after all, it has. The question is not whether someone was capable of developing the invention. The proper statutory inquiry is whether the

invention was obvious to one of ordinary skill in the art, at the time of the invention. Once disclosed to them, persons skilled in the art surely could have produced Kodak's camera, Edison's movie camera or electric lamp, or Glidden's barbed wire fence. But having to rummage through bits and pieces of prior art, selecting some and discarding others and to assemble the combination of old elements to produce each invention without the use of the inventor's disclosure as a blueprint is an entirely different matter.

V. THE IMPACT ON PATENT PROSECUTION IF THE CURRENT APPROACH IS MODIFIED

Currently, patent prosecution procedure requires that the Patent Office show a basis for denying a patent to an inventor. Thus, in the first instance, the burden of showing non-patentability rests with the Patent Office. *In re Piasecki*, 745 F.2d at 1472. Elimination of the teaching-suggestion-motivation standard in favor of the synergism standard would stand that burden on its head. Rather than having the Patent Office be required to show non-patentability in the first instance, the burden will be on the applicant to show that his invention has achieved some synergistic result to be patentable.

The teaching-suggestion-motivation approach is the applicant's safeguard against the Patent Office's potential application of hindsight. If this approach is eliminated, all the Patent Office will need to do is pick through the prior art to find each claim element. Once the prior art references have been obtained, whether or not the invention would have been obvious to one of ordinary skill in the art would become an irrelevant inquiry. The Patent Office will presume that such standard has been met if it can find all of the pieces of the claimed invention in the prior art. This has never been the

law. Indeed, this was an approach specifically rejected by this Court in *Dennison*. 475 U.S. at 810. The teaching-suggestion-motivation standard protects the applicant and gives the Patent Office an objective standard by which it can measure whether an invention is obvious. It also forces the Patent Office to articulate the basis for its conclusion, thus giving the applicant an opportunity to rebut that conclusion.

VI. REASONS FOR MAINTAINING THE CURRENT TEACHING-SUGGESTION-MOTIVATION APPROACH

The Federal Circuit adopted the teaching-suggestion-motivation approach to the ultimate conclusion on nonobviousness to ensure that the decision-making process was focused with greater intensity on the requirements of §103. The Federal Circuit accomplishes that result and does not lower the bar or lessen the standard of patentability. Rather, it provides a uniform approach to making the obviousness decision.

Eliminating the teaching-suggestion-motivation approach and adopting either of the approaches sought by Petitioner would undoubtedly result in the issuance of fewer patents. This would have a devastating impact on the United States economy and industries. Rarely does a commercial product surface that relies on technology that was developed without reference to or improve upon earlier works. To the contrary, the development of most technologies that are embodied in the commercial products that sustain the United States' economy proceed along a step-like fashion. This often results in the issuance of patents, with each patent marking a step in the progress of the art.

The patent system plays an important role in providing an incentive and protection for the individuals and companies that invest considerable amounts of time, resources and capital to develop such technologies. Most importantly, the patent system provides a vehicle for inventors to benefit from the knowledge gained by other inventors as they solve various problems associated with bringing a technology to commercialization and disclose the same in their patent applications, thus further promoting the progress of the useful arts. The current approach assures that the same consistent application of the obviousness standard will be maintained. Companies will continue to invest in improving technology provided they can secure rights to their respective innovations.

Changing the standard would likely curtail further innovation. Companies will be less willing to invest in product development if it is unable to secure patent rights. It simply will not be economically feasible to spend resources on innovation that cannot be protected. Without protection manufacturers can outsource components developed by others to the cheapest bidder, wherever in the world they might be found in an effort to sell their products at the lowest price and maintain their significant market positions. Thus, although changing the current standard of patentability by eliminating the teaching-suggestion-motivation approach to arriving at the ultimate conclusion of nonobviousness would be beneficial to some *amici* on behalf of Petitioner, such a change would not be good for American industry as a whole.

Changing the current level of patentability will impact the American economy in the future. Take, for example, American dependence on foreign oil. Reliance on foreign oil will be reduced in the future, at least in part, by advances in technology in the areas of alternative fuels, hybrid vehicles

and fuel cells, to name a few. The automotive industry, including suppliers such as *amici*, will be directly impacted by the continuous, incremental advances in these areas. For example, billions of dollars are being invested each year in the development of fuel cells and the technologies associated with integrating fuel cell stacks into vehicles.

The fuel cell was first invented in 1839, but there was no significant practical application for fuel cells until they were used by NASA in the space program. At first, the cost of building a fuel cell was astronomical. When NASA first started using fuel cells, a PEM fuel cell cost approximately $500,000 per kW. (See, www.sae.org/automag/features/fuel cells/fuelcell3. htm). Work continues at a feverish pace to reach a commercial automotive fuel cell cost target of approximately $25 per kW for a 50 kW system. (See, www.fuelcells.org, Questions and Answers About Hydrogen And Fuel Cell.) The cost of making a fuel cell stack and then integrating the same into a vehicle is more than a hundredfold higher than is acceptable for commercialization. However, fuel cell vehicles will be commercialized as the result of stepwise improvement in the technology.

The current approach to patent issuance fosters the development of this technology. It is virtually impossible for any one company to, on its own, fund the development of a commercially acceptable fuel cell vehicle. In such a situation, the patent portfolios of the companies funding development become critical. As is common, alliances are being formed to share knowledge, resources and cost in an effort to speed the development of this important technology. The patent portfolios and licensing are being offered as consideration. Furthermore, when fuel cell vehicles are eventually commercialized, such patent portfolios will be important for enforcement and defensive measures. Most of these

important patent portfolios today include files histories urging patentability based upon the teaching-suggestion-motivation approach that has been the approach used by the Federal Circuit and the Court of Custom Appeals for more than forty years. Eliminating the teaching-suggestion-motivation approach will adversely impact thousands of the patents in these portfolios, and the ability of inventors to protect their contributions to the development of the useful arts going forward.

More importantly, eliminating the teaching-suggestion-motivation approach will likely result in the nonobviousness decision making process under 35 U.S.C. §103 being supplanted by reliance on negative rules, rhetorical embellishments or talismanic slogans.

CONCLUSION

For the foregoing reasons, *amici* respectfully submit that the decision of the lower court should be affirmed insofar as it applied to the appropriate obviousness analysis, and *amici* urge the Court to adopt the teaching-suggestion-motivation approach as a viable approach to determining non-obviousness using the *Graham* factors.

Respectfully submitted,

RICHARD W. HOFFMANN
Counsel of Record
Warn Hoffmann Miller & LaLone PC
691 N. Squirrel Road, Suite 140
Auburn Hills, Michigan 48326
(248) 364-4300

CARY W. BROOKS
Reising Ethington Barnes Kisselle PC
201 W. Big Beaver, Suite 400
Troy, Michigan 48084
(248) 689-3500

Counsel for Amici Curiae

865 I

No. 04-1350

FILED
OCT 11 2006
OFFICE OF THE CLERK
SUPREME COURT, U.S.

In the Supreme Court of the United States

KSR INTERNATIONAL CO.,
Petitioner,

v.

TELEFLEX INC. and
TECHNOLOGY HOLDING CO.,
Respondents.

On Writ of Certiorari to the United States Court of Appeals for the Federal Circuit

BRIEF OF HAROLD W. MILTON, JR. AS *AMICUS CURIAE* IN SUPPORT OF RESPONDENT

HAROLD W. MILTON, JR. *
PATRICK R. ANDERSON
Counsel for Amicus Curiae

DICKINSON WRIGHT PLLC
38525 WOODWARD AVENUE
BLOOMFIELD HILLS, MI 48304
(248) 433-7200

** Counsel of Record*

Becker Gallagher · Cincinnati, OH · Washington, D.C. · 800.890.5001

QUESTION PRESENTED

Whether the Federal Circuit has erred in holding that a claimed invention cannot be held "obvious," and thus unpatentable under 35 U.S.C. § 103(a), in the absence of some proven "'teaching, suggestion, or motivation' that would have led a person of ordinary skill in the art to combine the relevant prior art teachings in the manner claimed.

TABLE OF CONTENTS

Question Presented i

Table of Contents ii

Table of Authorities iv

Interest of the *Amicus Curiae* 1

Summary of the Argument 2

Argument 5

I. Subjectivity allows wildly different and personal opinions to pervade the question of obviousness . 5

a. Some important and famous patents could be subjectively obvious 5

b. Subjecting patentability to personal opinions of obviousness runs afoul of Constitutional and statutory law 8

c. A test has evolved from the common law that has been mislabeled as "the suggestion test." 10

d. The rule articulated by this Court should prevent inconsistent and arbitrary decision-making 13

II. This Court should articulate a rule that is consistent with stare decisis and sound patent policy 18

a. A conclusive statement by this Court is needed 18

b. Stare decisis compels a conclusion that patentability rests with new or unexpected results 19

c. This rule is proven to be consistent with patent policy as expressed by Congress 24

III. There is more to the present invention than a mere selection of elements 26

Conclusion 27

TABLE OF AUTHORITIES

Cases

In re Adams,
356 F.2d 998 (C.C.P.A. 1966) 14, 25

Alza Corp. v. Mylan Laboratories, Inc.,
__ F.3d __ (Fed. Cir. Sept. 6, 2006)
available at http://www.fedcir.gov/opinions/
06-1019.pdf 17

Anderson's Black Rock, Inc. v. Pavement Salvage Co.,
396 U.S. 57 (1969) 22

In re Andre,
341 F.2d 304 (C.C.P.A. 1965) 19

In re Conti,
337 F.2d 664 (C.C.P.A. 1964) 19

Dann v. Johnston,
425 U.S. 219 (1976) 23

In re Dembiczak,
175 F.3d 994 (Fed. Cir. 1999) 25

Dystar Textilfarben Gmbh v. C.H. Patrick Co.,
__ F.3d __, __ (Fed. Cir. Oct. 3, 2006)
available at http://fedcir.gov/opinions/06-1088.pdf
. . . . . 11, 15, 16, 21, 22

Gottschalk v. Benson,
409 U.S. 63 (1972) 6

Graham v. John Deere Co.,
383 U.S. 1 (1966) 11, 12, 15, 16, 21, 25

Great Atlantic & Pacific Tea Co. v. Supermarket Equipment Corp.,
340 U.S. 147 (1950) 21

Hotchkiss v. Greenwood,
52 U.S. (11 How.) 248 (1851) 10, 22

In re Kahn,
441 F.3d 977 (Fed. Cir. 2006) 12, 15, 17

Kimberly-Clark Corp. v. Johnson & Johnson,
745 F.2d 1437 (Fed. Cir. 1984) 20

Laboratory Corp. of America v. Metabolite Laboratories, Inc.,
548 U.S. ___, 126 S. Ct. 2921 (2006) 6

In re Lee,
277 F.3d 1338 (Fed. Cir. 2002) 14, 17

Lincoln Co. v. Stewart-Warner Corp.,
303 U.S. 545 (1938) 22

McGinley v. Franklin Sports, Inc.,
262 F.3d 1339 (Fed. Cir. 2001) 11

Medtronic, Inc. v. Cardiac Pacemakers, Inc.,
721 F.2d 1563 (Fed. Cir. 1983) 18

Monarch Knitting Mach. Corp. v. Sulzer Morat Gmbh.,
139 F.3d 877 (Fed. Cir. 1998) 11

Rodriguez de Quijas v. Shearson/American Express, Inc.,
490 U.S. 477 (1989) 18-19

Ruiz v. A.B. Chance, Inc.,
357 F.3d 1270 (Fed. Cir. 2004) . . . . . *passim*

Sakraida v. AgPro, Inc.,
425 U.S. 273 (1976) 18, 22, 24

Structural Rubber Prods. Co. v. Park Rubber Co.,
749 F.2d 707 (Fed. Cir. 1984) 10

In re Winslow,
365 F.2d 1017 (C.C.P.A. 1966) 19, 20, 21, 23

Constitutional and Statutory Provisions

U.S. CONST. art. 1, sec. 8, cl. 8 9

5 U.S.C. § 551-559 (2006) 17

5 U.S.C. § 706 (2006) 17

35 U.S.C. § 103 . . . . . *passim*

Other Authorities

Mary Bellis, *Charles Proteus Steinmetz - Inventor of the Alternating Current*, About Inventors, *at* http://inventors.about.com/od/astartinventions/a/Steinmetz.htm 27

P.J. Federico, Commentary on the New Patent Act (Originally printed in 35 U.S.C.A. (1954 ed) 11

Lecture on Discoveries and Inventions at the Young Men's Ass'n of Bloomington, Il (April 6, 1858) (transcript available at: http://showcase.netins.net/web/creative/lincoln/speeches/discoveries.htm) 13

Manual of Patent Examining Procedure (2006) . . . 14, 15

ROBERT P. MERGES & JOHN F. DUFFY, PATENT LAW AND POLICY 757 (3d ed. 2002) 20

Giles S. Rich, *Escaping the Tyranny of Words - Is Evolution in Legal Thinking Impossible?*, NONOBVIOUSNESS - THE ULTIMATE CONDITION OF PATENTABILITY (1980), *reprinted in* 14 FED. CIR. B.J. 193 (2004) 18

Giles S. Rich, *Laying the Ghost of the "Invention" Requirement*, 1 APLA Q. J. 26 (1972), *reprinted in* 14 FED CIR B.J. 147 (2004) 9, 10, 11, 18

Brief of Harold W. Milton, Jr. ("Hal")
as *Amicus Curiae* Urging Affirmance[1]

INTEREST OF THE *AMICUS CURIAE*

Mr. Milton is a patent attorney with over 45 years of experience. During this time, he has worked both as an examiner for the USPTO, and as an attorney in private practice. He has steadily drafted patents for the entire 45 years. In addition, Mr. Milton drafted the claims of U.S. Patent Application Ser. No. 09/643,422 which issued as U.S. Patent No. 6,237,565, the patent at issue in this case.[2]

Mr. Milton currently manages a training program, acting as a mentor to student clerks and young attorneys, training them in the art of patent application preparation. He also regularly teaches a course in patent application preparation at Michigan State University College of Law. As such, Mr. Milton has a substantial interest in appropriate adjudication of substantial issues of patent law, and particularly, the legal standard for patenting an advance benefiting society.

---

[1] In accordance with Supreme Court Rule 37.6, this brief was not authored in whole or in part by counsel to any party. The parties have consented to the filing of *amicus curiae* briefs in papers docketed with the court on July 19, 2006 and July 31, 2006. No person other than the *amicus curiae* made a monetary contribution to the preparation or submission of this brief.

[2] Respondent is no longer a client of *amicus*, and therefore the interest of *amicus* is independent of the success or failure of Respondent in the pending action. The views and opinions expressed in the brief are his own and should not be attributed in any way to Respondent.

SUMMARY OF THE ARGUMENT

The test that a combination of elements is not obvious, and therefore patentable, in the absence of a suggestion to combine the elements is actually illusory and a misnomer. The prior decisions of this, and other, courts set forth the proper and fundamental test: selecting elements from various prior art references and combining them together with no change in their respective functions fails to yield a nonobvious and patentable invention. On the other hand, the courts have likewise held that a combination of elements is not obvious and is patentable when the new combination produces a new or unexpected result.

Technological change is generally incremental, usually by many investigators in the field, and it is not a sudden and revolutionary step forward. The public is usually not aware of the incremental progress and only learns of the last increment by a successful inventor who makes the technology usable. As examples, the inventive contributions of famous inventors, e.g. the Wright brothers, Thomas Edison, and some leading edge companies, could be rendered obvious in hindsight, yet their discoveries founded entire industries where none had previously existed. It is the race to make the successful increment of progress that spurs capitalism and benefits all of society.

The Wright brothers' contribution to aviation was limited to differentially warping the airplane wings vis-à-vis the wings of birds. Thomas Edison's contribution to electric lighting was limited to taking a known filament coil and winding it tightly in multiple loops, as opposed to the previously known single loop. Texas Instruments' work on the pocket calculator was simply in combining multiple computer chips into a single, integral chip positioned beneath

the keypad. Each of these inventions has had an enormous economic and social impact on our society. Petitioner's reasoning would have rendered all of these achievements as obvious, and runs afoul of Constitutional and statutory law.

The current test for patentability requires that before two or more prior art references can be combined to demonstrate obviousness, there must be some suggestion in the prior art to combine the teachings, and is known as the suggestion test.[3] This label is unfortunate, and a misnomer, as it implies a requirement of a specific statement in the prior art. In actual practice, the presence of any such statement is simply part of the prior art that is combined, making any express suggestion illusory. The label itself tends to speak against finding an invention obvious based on a mere selection of elements without any new or unexpected results, an approved and proven standard of patentability. This test needs to be reinforced to maintain an objective objective standard of patentability to ensure consistent evaluation of patentable subject matter that is also consistent with the previous decisions of this Court and which will retain the validity of thousands of existing patents.

Without an objective standard, chaos would be multiplied across thousands of patent examiners, judges, juries, attorneys, etc. and would result in inconsistent decisions on patentability. It would negatively impact the incentive to pursue important contributions to technology, and would

---

[3] Some other courts, including the CAFC in *Teleflex*, referred to a "motivation to combine." *See, e.g., Teleflex Corp. v. KSR Int'l Co.*, 119 Fed. Appx. 282, 286 (Fed. Cir. 2005). The use of the term "motivation" or "suggestion" does not affect the analysis under the test. For simplicity, only the term "suggestion" is used herein.

impede the forward progress of the useful arts. The members of this Court might not even agree, subjectively, about the obviousness of any particular invention. For this reason, Congress specifically prohibited a subjective standard of patentability in 35 U.S.C. § 103 (a).

Objectivity is achieved where, as under current law, an invention is considered obvious, and therefore not patentable, if factual reasoning can be articulated to show obviousness. This test, derived from § 103 and Supreme Court precedent, enables the Court of Appeals for the Federal Circuit ("CAFC") to ensure stability among the lower courts and reasoned decision-making in the administrative decisions of the patent office. This Court should reject the suggestion test and re-emphasize, in accordance with its prior decisions, that an invention is obvious, and not patentable, if it is a mere selection of prior art elements combined to perform the identical function as they did separately in the prior art. No express suggestion is needed as it is inherent in the mere selection by one skilled in the art. Such a combination by mere selection without a new or unexpected result fails to yield a patentable invention. This rule presumes that one of ordinary skill has the basic ability to merely select and combine known components for their known purposes. This prevents patents from issuing for trivial aggregations with no creative component.

The patent at issue is not obvious as a mere selection, because it recites a placement or positioning not known in the art. The patent is much narrower than simply an adjustable pedal assembly combined with an electronic control; instead, it is the first to position the electronic control on a fixed pivot for both adjustment and operation of the pedal. The novel improvement is characterized by the placement of the electronic control on the support bracket to prevent the

movement of the electronic control as the pedal travels fore and aft during adjustment of the operating position. This feature is not shown in the prior art and no reference discloses such placement, i.e. the placement itself required some creativity.

ARGUMENT

I. Subjectivity allows wildly different and personal opinions to pervade the question of obviousness.

a. Some important and famous patents could be subjectively obvious.

On December 17, 1903, Wilbur Wright piloted the Wright Flyer for 59 seconds, traveling a distance of 852 feet, conclusively demonstrating the possibility of sustained flight. Earlier efforts had solved the problems of lift and thrust. In fact, the now familiar bi-plane structure of the Wright Flyer was derived from the work of Octave Chanute, whose hang gliders taught in 1896 that stacking multiple wings on top of each other could achieve extra lift. The final problem, total control, was not demonstrated until the now famous demonstration at Kitty Hawk, NC, and the issuance of U.S. Pat. No. 821,323 in 1906.

While observing birds, the Wright brothers noticed how they would lift one edge of one wing while tilting the edge of the other wing down. They related that both birds and bicycles "roll" or "lean" into a turn. Thus, their control solution had been found. By designing a rig which could actuate opposite sides of the wings simultaneously in opposite directions, the Wright brothers had achieved the elusive control.

Like many inventions, however, the claimed elements of the Wright patent were known in the prior art, albeit not readily recognizable as being combinable. After all, the Wright brothers simply combined the known bi-plane structure of Chanute with the "known" practice in birds of tilting wing edges in opposite directions to achieve control. Was this inventive contribution obvious? Some members of this Court might even question whether the concept, derived from the natural instinct of birds, is patentable as an extension of the "recogni[tion] that '[p]henomena of nature, though just discovered'" are not patentable. *Laboratory Corp. of America v. Metabolite Laboratories, Inc.*, 548 U.S. ___, _____, 126 S. Ct. 2921, 2923 (2006) (Breyer, J., dissenting) (quoting *Gottschalk v. Benson*, 409 U.S. 63, 67 (1972)). Of course, the Wright patent issued for the structural improvement to the plane, not an abstract idea about mimicking a bird's behavior. In any event, the facts show that it was not obvious as other inventors in the field had the same access to birds and failed to observe and apply the practice, indicating that the Wright brothers had indeed produced a new and unexpected result.

Along similar lines, Thomas Edison is widely known in America as the inventor of the electric light bulb. Edison's first fully functional light bulb consisted of a tightly coiled carbon filament placed within a glass bulb. However, Joseph Swan had produced a light bulb having a loosely wound filament coil within a glass bulb based upon experiments performed years earlier. The problem with earlier attempts, like Swan's, was that the filament was inefficient and had too short of a lifespan to be practical.

Edison's bulb was unique in that he tightly wound the carbon filament into a coil to vastly increase the filament's electrical resistance. Edison discovered that increasing the

resistance of the filament was the key to increasing its durability. It was also then generally known in electrical engineering that winding a wire into a tight coil would increase the wire's resistance. The increased resistance in the carbon filament vastly decreased the energy used as well as the heat produced by the light bulb. It was this combination of known practices that produced the first efficient, long lasting, and easy to manufacture light bulb.

However, Swan's light bulb simply taught the loose filament coil as a way of increasing the available surface area within the bulb. Thus, the coil winding knowledge combined with light bulb filaments produced a new result. This combination is what is encompassed by U.S. Pat. No. 223,898, issued to Edison in 1880.

Finally, Texas Instruments, Inc. ("TI") debuted its pocket-sized calculator as its first commercial product in 1972. The TI calculator was smaller, lighter and less expensive than any other calculator on the market.[4] However, portable calculators were previously available, and took advantage of integrated circuit chips, just as TI's product. The prior calculators used multiple integrated chips, each performing a few dozen functions. The multiple chips presented a packaging problem, making the product bulky and expensive.

The key to the TI calculator was combining the several chips of the prior calculators onto a single thin wafer. Accordingly, all of the elements of TI's invention were already known in the art; to wit, electronic adding circuits

---

[4] TI's pocket calculator sold for around $150, at a time when other, larger calculators sold for as much as $1000.

combined with a number pad. TI simply packaged these previously known components to produce a thin calculator having a single chip that could be placed in a shirt pocket. TI's U.S. Patent No. 3,819,921 is based upon the relative positioning of the single chip, specifying that it be no bigger than the keypad. Therefore, although it may have been obvious to replace several chips with a single chip, once that has become known in the art, it was the positioning of that single chip in relation to the keypad that made the pocket calculator possible. Notably, this relative positioning also exists in the patent claim at issue, discussed *supra* at 26-27.

b. Subjecting patentability to personal opinions of obviousness runs afoul of Constitutional and statutory law.

History, of course, demonstrates that no other flying attempt came close to the success achieved by the Wright brothers. Even today, modern planes and gliders still operate from the same basic principle, albeit movable ailerons have been substituted for warping.

Likewise, electric lighting only became widespread after Edison's discovery. Without long lasting filaments, light bulbs would simply not have been practical enough to encourage people to abandon their candles and oil lamps, and investment in production of electrical power would not have been as lucrative. Today, society's ability to easily function after dark is taken for granted, but in 1880, it was quite stunning.

Finally, the pocket calculator was an instant success, making TI a household name, not to mention market leader, in pocket calculators within a few years of its release. An entirely new market was created, forever changing classroom

instruction and engineering field work. However, it was the pursuit of the pocket calculator patent that motivated TI to produce their first commercial product and forever change their business model. Many other products would follow in the years to come, and today TI is a veritable giant in the field of electronics.

Submitting inventions to a subjective standard of patentability would have disastrous consequences. It would signal a return to the pre-1952 standard of invention, the subjectivity of which made it "the plaything of the judiciary [where] many judges delighted in devising and expounding their own ideas of what it meant. This kind of mystical reasoning left the judiciary free to indulge their personal whims about patentability." Giles S. Rich, *Laying the Ghost of the "Invention" Requirement*, 1 APLA Q. J. 26 (1972), *reprinted in* 14 FED CIR B.J. 147, 166 (2004). Subjectively, the members of this Court may not be able to agree about the "inventiveness" of the subject matter before it. Differing opinions will only compound this problem by subjecting patentability to the personal biases and opinions of thousands of people, all serving different roles within the system. Patent examiners will not agree amongst themselves, let alone with attorneys, judges, and juries as to what is patentable and what is not. One examiner, typically an inexperienced examiner, might have too high a standard, while another too low. If the standard of patentability is too high and prevents the patentability of such incremental advances, the incentive for competitive inventors to pursue solutions and make commercially important inventions would be non-existent. This would frustrate the Constitutional purpose of "promot[ing] the progress of ... the useful arts." U.S. CONST. art. 1, sec. 8, cl. 8. In addition, thousands of patents might be litigated to determine their validity, which would

waste millions of dollars, further frustrating the Constitutional command.

The application of a personal opinion to determine whether the increment of advance in an invention was obvious would violate § 103's mandate that "[p]atentability shall not be negatived by the manner in which the invention was made." 35 U.S.C. § 103 (a). An objective test operates to fulfill this requirement by simply looking at the art and the objective reasons it would have been obvious to combine the references. This ensures that every invention, from a potato peeler to a hybrid-electric car, is examined consistently, under the same standards, without being biased by the subjective opinion of the degree of incremental advance in the art. In short, applying a subjective standard of patentability would create chaos and circumvent the purpose of the Constitutional grant, § 103, and the prior decisions of this Court.

c. A test has evolved from the common law that has been mislabeled as "the suggestion test."

Novelty has long been a requirement of patentability, and asks whether each and every component of a patent claim is shown in a single reference. *Structural Rubber Prods. Co. v. Park Rubber Co.*, 749 F.2d 707, 715 (Fed. Cir. 1984). Understandably, this is difficult to find. More commonly, a reference must be modified by combining it with other teachings to articulate a rejection of a patent. This need has been recognized for over 150 years. For example, the Supreme Court, in *Hotchkiss*, held that a patent would not be valid if it was merely "the work of the skilled mechanic, not that of the inventor." *Hotchkiss v. Greenwood*, 52 U.S. (11 How.) 248, 267 (1851). As the common law of "invention" became unworkable, as described by Judge Rich, *supra*, the drafters of the 1952 act proposed a revision that would

preclude patentability "if the differences between the subject matter sought to be patented and the prior art are such that the subject matter as a whole would have been obvious at the time the invention was made to a person having ordinary skill in the art." 35 U.S.C. § 103(a). *See also, Rich, supra* at 166. However, "[t]he statute does not purport to categorize the particular criteria according to which the judgment is to be exercised." P.J. Federico, Commentary on the New Patent Act (Originally printed in 35 U.S.C.A. (1954 ed). In other words, it was up to the courts.

The Supreme Court set forth the basic factual inquiries that form the backdrop against which obviousness is determined. *Graham v. John Deere Co.*, 383 U.S. 1 (1966). The fact finder should determine "the scope and content of the prior art," ascertain the "differences between the prior art and the claims at issue," and resolve "the level of ordinary skill in the pertinent art." *Id.* at 17. "Against this background, the obviousness or nonobviousness of the subject matter is determined." *Id.* In keeping with the tradition in the common law, the lower courts interpreted the factual inquiries of *Graham* and the policy expressed in § 103 to require some suggestion in the prior art, whether in the references themselves, or in the knowledge of those skilled in the art when two or more references are combined together to invalidate a patent. *See Dystar Textilfarben Gmbh v. C.H. Patrick Co.*, __ F.3d __, __ (Fed. Cir. Oct. 3, 2006) available at http://fedcir.gov/opinions/06-1088.pdf p.7 (discussing the suggestion test as a "subsidiary requirement" of the *Graham* factors); *McGinley v. Franklin Sports, Inc.*, 262 F.3d 1339, 1351 (Fed. Cir. 2001) (discussing the suggestion to combine as part of the scope and content of the prior art and the level of skill in the art); *Monarch Knitting Mach. Corp. v. Sulzer Morat Gmbh.*, 139 F.3d 877, 881-83, 886 (Fed. Cir. 1998) (discussing the suggestion as part of the

scope and content of the prior art), and *Ruiz v. A.B. Chance, Inc.*, 357 F.3d 1270, 1275 (Fed. Cir. 2004) (discussing how the suggestion test fulfills the policy statements in § 103). Such an evolution was specifically contemplated by this Court when it laid down the policy. *Graham*, 383 U.S. at 18 (noting that this test "should be amenable to a case-by-case development") (emphasis added). This analysis recognizes the fact that "most inventions arise from a combination of old elements." *In re Kahn*, 441 F.3d 977, 986 (Fed. Cir. 2006). Therefore, the question is not whether the individual elements can be found, but rather whether it would have been obvious to combine them. This has become unfortunately labeled as "the suggestion test." It will be demonstrated, however, that any presence of an express suggestion is simply an illusion, rendering the suggestion test factually non-existent.

For example, in *Ruiz*, the claimed invention was a screw anchor with a metal bracket used to stabilize a building foundation. *Ruiz*, 357 F.3d at 1272-73. A first prior art reference taught the use of the screw anchor having a concrete haunch. *Id.* at 1273. A second reference taught a push pier anchor with a metal bracket. *Id.* According to the court, "the nature of the problem to be solved" would have led the inventors "to combine the screw anchor in [reference one] with the metal bracket in [reference two]." *Id.* at 1276. Despite the application of the suggestion test, there was nothing specifically indicated in the prior art that would comprise a "suggestion" as the term is colloquially known. It will be demonstrated, *infra* at 21, that the test is simply that a selection of prior art elements that fails to produce a new or unexpected result is not patentable.

Additionally, in *Kahn*, the invention was a combination of components for reading aloud words from a page of text using directional sound to indicate position on the page. *Kahn*, 441

F.3d at 981. A first prior art reference taught an eye controlled sensor that can read aloud a word from a page of text. *Id.* at 982. A second reference taught the use of phase shifting of sound to create an acoustical image representing a physical location, and expressly indicated that it could be used as a reading device. *Id.* at 983. Because of this express statement, the court held that it would have been obvious to combine the references. *Id.* at 989. Although this does represent a "suggestion," the statement in the second reference is more appropriately thought of as an expression of an expected result, making the suggestion an illusion. The proffered invention is therefore a mere selection of old elements, each performing as expected, and without new and unexpected results resulting from the combination.

d. The rule articulated by this Court should prevent inconsistent and arbitrary decision-making.

However, although the suggestion test may be factually non-existent (or unnecessary), an objective test of patentability is still mandatory to prevent arbitrariness. As Abraham Lincoln said, "The patent system ... added the fuel of interest to the fire of genius in the discovery and production of new and useful things." *Lecture on Discoveries and Inventions* at the Young Men's Ass'n of Bloomington, Il (April 6, 1858) (transcript available at: http://showcase.netins.net/web/creative/lincoln/speeches/discoveries.htm). This fuel is threatened by the imposition of a subjective test that would set the bar too high and act as a disincentive to inventors. A subjective test would surely be used to weaken the patent system by those viewing patents as restraints on trade.

An early case illustrates an arbitrary decision, without objective support, by the USPTO that an invention was obvious. The case involved an application for a patent on an

improved cooling method that was characterized over the prior methods by aerating water before spraying it onto cans. *In re Adams*, 356 F.2d 998, 1001 (C.C.P.A. 1966). Prior art cooling methods used jets of non-aerated water, while secondary references taught the use of aerators in ordinary water faucets. *Id.* However, no one prior to this application had combined aerated water in a cooling system. Instead, aerators were used in water faucets to prevent splashing, with no indication that aerated water would have superior heat transfer properties. Nevertheless, the examiner and board of appeals rejected the application and "made no attempt to explain why it would be obvious, other than to say aerating or foaming rinse water is commonplace." *Id.* at 1002.

In reversing the rejection, the Court of Customs and Patent Appeals, a predecessor to the CAFC, specifically countered the examiner's conclusory, hindsight based argument by noting that "neither reference contains the slightest suggestion to use what it discloses in combination with what is disclosed in the other." *Id.* In other words, after reading the inventor's discovery, the examiner was able to point out foam fire extinguishers and aerated water from kitchen sinks. However, as the court pointed out, this "ex post facto explanation" as to why Adams' invention works does not displace the need of finding evidence indicating obviousness. *Id.* at 100. Failure to do so is the essence of arbitrary decision-making. *In re Lee*, 277 F.3d 1338, 1345 (Fed. Cir. 2002). The examiner's reasoning in *Adams* is a prime example of the type of hindsight that is impermissible under § 103, commanding application of an objective test.

Currently, the suggestion test is applied by the Patent and Trademark Office examination corps ("PTO") under a series of instructions adopted by PTO officials. *See* Manual of Patent Examining Procedure §§ 2141-2143 (2006) (hereinafter

"M.P.E.P. § ___"). It is the "[o]ffice policy to follow *Graham v. John Deere Co.*" and therefore determine the content of the prior art, the differences between the proposed invention and the prior art, and the level of ordinary skill in the art. M.P.E.P. § 2141. Once these facts are established, the examiner bears the initial burden, and must identify factual support showing that

> there [is] some suggestion or motivation, either in the references themselves or in the knowledge generally available to one of ordinary skill in the art, to modify the reference or to combine reference teachings. Second, there must be a reasonable expectation of success. Finally, the prior art reference (or references when combined) must teach or suggest all the claim limitations. The teaching or suggestion to make the claimed combination and the reasonable expectation of success must both be found in the prior art, and not be based on applicant's disclosure.

Id. at § 2142.

This purports to be an instruction to examiners on how to take the factual inquiries provided by *Graham*, and analyze them to make a legal conclusion. It prevents an examiner from arbitrarily declaring an invention to be obvious without any factual support. However, the term "suggestion" is unfortunate, as *Kahn* and *Ruiz* demonstrate, because the suggestion does not have to be an explicit statement. *See Dystar*, at http://fedcir.gov/opinions/06-1088.pdf p.17 (explaining that the suggestion is often "an explanation of the well-known principle or problem-solving strategy to be applied"). Nonetheless, to the extent that the test attempts to impress upon examiners the importance of articulating factual

evidence to support the legal conclusion of obviousness, such a requirement is absolutely necessary.

Ironically, the PTO is specifically requesting that this Court give it the power to make arbitrary decisions. *See* Brief of United States as Amicus Curiae Supporting Petitioner at 21-26, *KSR Int'l. v. Teleflex, Inc.*, No. 04-1350 (Aug. 22, 2006) (expressing the views of the USPTO). Their argument, essentially, is that the suggestion test is not justified because all courts and agencies must, in various circumstances, "avoid the influence of hindsight." *Id.* at 21. The suggestion test, it is argued, "unduly restrict[s] the ability of patent examiners to reject obvious patent applications without an extensive search ..." *Id.* at 22 (emphasis added). This is an interesting complaint since *Graham* recognized the PTO as having "primary responsibility for sifting out unpatentable material." *Graham*, 383 U.S. at 18. It is unclear how this can be accomplished without extensive searching.

Regardless, the suggestion test should not require an expressly stated suggestion in a prior art reference. As it has been demonstrated, any factual supporting reasoning will suffice. If a mere re-labeling of the test is all that is required to clarify this important issue, then so be it. Of utmost importance is the reliance upon facts and not conclusory assertions to establish obviousness. *Dystar*, at http://fedcir.gov/opinions/06-1088.pdf p19 (noting that assumptions about knowledge in the art "cannot substitute for evidence thereof"). Instead, the PTO is asking to "be allowed to bring to bear ... its reckoning of the basic knowledge and common sense possessed by persons in particular fields of endeavor when making the predictive judgment whether an invention would have been obvious." Brief of United States, *supra*, at 26. What's more, "[t]he patent applicant should

bear the burden of proving PTO's Board and examiners wrong." *Id.*

In other words, the PTO wants the authority to tell applicants that an invention is obvious because the examiner says it is, and if the applicant believes otherwise, then the applicant must prove a negative, i.e. absence of obviousness, in order to prevail. Yet, through all of this, applicants are supposed to simply trust "the PTO to avoid the influence of hindsight." *Id.* at 21. In the absence of an objective test, it is unclear how appellate courts can ensure compliance. Furthermore, the PTO offers no solution as to how this requirement can be policed. Such arbitrary decisionmaking is specifically what the Administrative Procedure Act seeks to prevent. *See* 5 U.S.C. §§ 551-559, 706 (2006). *See also Kahn*, 441 F.3d at 988, and *Lee*, 277 F.3d at 1344-45. That goal is well served by application of an objective test, "rest[ing] on the unremarkable premise that legal determinations of obviousness ... should be based on evidence rather than on mere speculation or conjecture." *Alza Corp. v. Mylan Laboratories, Inc.*, __ F.3d __, __ (Fed. Cir. Sept. 6, 2006) *available at* http://www.fedcir.gov/opinions/06-1019.pdf, pp.5-6 (emphasis added).

However, the concerns of the USPTO would be addressed in the reaffirmation and restatement by this Court that merely selecting elements from various prior art references and combining them together with no change in their respective functions fails to yield a patentable, nonobvious invention. This test also positively addresses the software industry's concerns, as discussed *infra* at 23-24, by rendering obvious those software patents that merely select known steps into a computer program within the inherent skill of an ordinary computer programmer.

II. This Court should articulate a rule that is consistent with stare decisis and sound patent policy.

a. A conclusive statement by this Court is needed.

One fact that is not disputed by *amicus* is that the CAFC has tended to ignore certain decisions of this Court. *See* Brief for Petitioner at 29, *KSR Int'l v. Teleflex, Inc.*, No. 04-1350 (Aug. 22, 2006). In fact, the CAFC has criticized lower courts for citing language related to "combination patent claims ... taken from the opinion in *Sakraida* ... [because i]t but obfuscates the law. *Medtronic, Inc. v. Cardiac Pacemakers, Inc.*, 721 F.2d 1563, 1566 (Fed. Cir. 1983) (citations omitted). This statement belies Judge Rich's comments to the APLA in 1978:

> It can hardly be denied that recent decisions of the Supreme Court in patent validity cases are illogical ... and self-contradictory. However, it will get litigants nowhere to tell the lower federal courts that the Supreme Court has lost is marbles! ... That would cause the Court to lose face and it would be disrespectful .... No lawyer in his right mind would do that.

Giles S. Rich, *Escaping the Tyranny of Words - Is Evolution in Legal Thinking Impossible?*, NONOBVIOUSNESS - THE ULTIMATE CONDITION OF PATENTABILITY, at 3:301 - 324 (1980), *reprinted in* 14 FED. CIR. B.J. 193, 194 (2004) (internal quotes omitted).

Of course, a lower court should never attempt to by-pass the decisions of the Supreme Court. *Rodriguez de Quijas v. Shearson/American Express, Inc.*, 490 U.S. 477, 484 (1989) ("[T]he Court of Appeals should follow the case which

directly controls, leaving to this Court the prerogative of overruling its own decisions.") But disobedience of the CAFC should not cause punishment to be inflicted onto the system as a whole. Objectivity must be maintained. Moreover, this Court should provide guidance to the lower courts that their function is to interpret the law, not to set patent policy. It is imperative that the Court's opinion provide a workable, objective rule apart from merely overruling or discarding the suggestion test.

b. Stare decisis compels a conclusion that patentability rests with new or unexpected results.

There is, in fact, an existing body of law, consistent with this Court's precedent, that requires "[e]ach question of obviousness [to] ultimately rest on its own facts." *In re Andre*, 341 F.2d 304, 308 (C.C.P.A. 1965). In some situations, "the references[,] when contemplated by one of ordinary skill in the art[,] would, *in themselves*, suggest ... the combination." *Id.* (quoting *In re Conti*, 337 F.2d 664, 670 (C.C.P.A. 1964)) (emphasis added). In a case involving the patent application of Fred Winslow for a method of filling plastic bags, Judge Giles S. Rich provided a vivid analysis in affirming the rejection. *In re Winslow*, 365 F.2d 1017, 1020 (C.C.P.A. 1966). Specifically, the court agreed that the application was nearly identical to a reference to Gerbe, with the exception of using retaining pins instead of a clamp to hold the bags in place. *Id.* A second reference, to Hellman, disclosed the use of a pin for holding bags in position that performed the identical function to the applicant's system. *Id.* However, the significance in the decision is the description of applying § 103 to determine whether the differences are obvious:

> [F]irst picture the inventor as working in his shop with the prior art references - which he is presumed to know - hanging on the walls around him.... If there were any bag holding problem in the Gerbe machine when plastic bags were used, their flaps being gripped only by the spring pressure between the top and bottom plates, Winslow would have said to himself, "Now what can I do to hold them more securely?" Looking around the walls, he would see Hellman's envelopes with holes in their flaps hung on a rod. He would say to himself, "Ha! I can punch holes in my bags and put a little rod (pin) through the holes. That will hold them!"

Id.[5]

Therefore, merely selecting features from various prior art references and combining them together with no new or unexpected results fails to yield a patentable, nonobvious invention. The analysis in *Ruiz* exemplifies a modern example of this test. Although couched in terms of a suggestion to combine, the court reasoned that since all the elements were disclosed in the art, the conclusion of obviousness was supported on the record. *Ruiz*, 357 F.3d at 1276. However, from the description, it is clear that the

---

[5] This description has since become known to members of the patent bar as the *Winslow Tableau*. *See, e.g.*, ROBERT P. MERGES & JOHN F. DUFFY, PATENT LAW AND POLICY 757 (3d ed. 2002). It should be noted that a properly applied analysis should refer to a hypothetical person skilled in the art, as contemplated by § 103. *See, e.g., Kimberly-Clark Corp. v. Johnson & Johnson*, 745 F.2d 1437, 1454 (Fed. Cir. 1984) (Rich, J.) (noting that there is "no need to presume that the inventor knows anything about the prior art").

invention consisted of nothing more than a mere selection of a screw anchor and a metal bracket, both known separately in the art without "achiev[ing] a new result." *Id.* at 1272-73, 1275. One of ordinary skill is therefore presumed to have at least the basic ability to combine known components for their known purposes; the selection process is inherent in the ordinary skill. This also fulfills *Graham*'s constitutional mandate that patents "add to the sum of useful knowledge." *Graham*, 383 U.S. at 6.

Where there is no change in the function of the claimed combination from the prior art, the *Winslow* analysis transcends mere "break[ing of] an invention into its component parts." *Ruiz*, 357 F.3d at 1275. Instead, by considering the function, examination is made into the "subject matter as a whole." 35 U.S.C. § 103. This evaluation gives value to the "combin[ation of] various existing features or principles in a new way to achieve a new result - often the very definition of invention." Ruiz, 357 F.3d at 1275 (emphasis added). It is this new result that is the contribution of the inventor. One of ordinary skill (i.e. less than an inventor) is presumed to know to combine old components to achieve an old result.

In fact, defining invention in this manner is precisely consistent with this Court's case law in accordance with the practice of "gleaning the law ... from a careful reading of the full text of a group of related precedents." *Dystar*, at http://fedcir.gov/opinions/06-1088.pdf p20. In *Great Atlantic & Pacific Tea Co. v. Supermarket Equipment Corp.*, 340 U.S. 147 (1950), the question of liability turned on whether patent claims for a grocery check-out counter were valid. *Id.* at 148-49. The Court invalidated the claims because none of the elements of the claims "perform[ed] any additional or different function." *Id.* at 152.

Later, after the passage of § 103, the Court invalidated another patent as obvious for the same reason. *See Anderson's Black Rock, Inc. v. Pavement Salvage Co.*, 396 U.S. 57 (1969). Specifically, the patent was directed to an asphalt paver incorporating a radiant heater. *Id.* at 58. Notably, the heater provided an important advantage: by heating a previously paved strip of asphalt, a smoother joint was formed. *Id.* at 59. However, because it was known prior to the invention to use a separate heater in tandem with a paver, "[t]he combination of putting the burner together with the other elements in one machine ... did not produce a 'new or different function.'" *Id.* at 60 (quoting *Lincoln Co. v. Stewart-Warner Corp.*, 303 U.S. 545, 549 (1938).

Finally, the last time this Court considered the obviousness of a patent was in *Sakraida v. AgPro, Inc.*, 425 U.S. 273 (1976). The patent claim at issue involved a system for releasing a rush of water along a sloped floor to carry waste toward a drain at the lower end of the floor. *Id.* at 276 n.2. After citing a variety of prior art references, ranging from prior patents to Greek mythology, the Court concluded that the patent "simply arranges old elements with each performing the same function it had been known to perform." *Id.* at 282. The failure to produce a new function was catastrophic to patentability, and indicative of "the work of the skillful mechanic" who knows how to combine known elements for their known functions, and "not that of the inventor" who seeks a new result. *Hotchkiss*, 52 U.S. (11 How.) at 267. *See also Ruiz*, 357 F.3d at 1275 (defining invention as combining elements "to achieve a new result"); *Dystar*, at http://fedcir.gov/opinions/06-1088.pdf pp. 23-25 (reconciling *Black Rock* and *Sakraida* with CAFC cases to demonstrate their compatibility consistency).

From these cases, a rule can be synthesized, consistently with the description provided in *Winslow*, that selecting features from various prior art references and combining them together with no change in their respective functions fails to yield a patentable, nonobvious invention. This allows the PTO, as well as the lower courts, to invalidate patents as obvious without an explicitly stated suggestion. This properly vests the ordinary artisan with the inherent ability to combine prior art elements, and finds patentable weight in the achievement of new or unexpected results.

This rule is also applicable in methods as well. For example, steps individually known in the prior art that are combined together in a single computer program are not patentable simply because the computer provides the medium for combining and performing the known steps. In many cases, the lack of a computer in the prior art is the very reason that the elements were not previously combined, i.e. there was no computer sophisticated enough to enable the combination of known steps. However, the absence of an express suggestion to combine, particularly for business methods that simply add the use of an appropriate computer, does not require a finding of patentability when it was simply the computer that facilitated the combination in the first place. *See Dann v. Johnston*, 425 U.S. 219, 226-30 (1976) (noting that one of skill in the art would have been able to use banking information and sophisticated data processing methods to arrive at the claimed invention). Rather, the combination of known steps into a computer program is merely a selection inherent in the skill of a computer programmer, a standard which should meet the objectives of the software industry. *See, e.g.*, Brief of Intel Corp. and Micron Technology, Inc. as *amici curiae* in support of Petitioner at 2, *KSR Int'l v. Teleflex, Inc.*, No. 04-1350 (Aug. 21, 2006) ("Intel and Micron are deeply concerned that the

Federal Circuit's ... standard ... has facilitated the proliferation of patents claiming nothing more than the straightforward combination of references already well-known in the relevant art."), *and* Brief of the Business Software Alliance as *amicus curiae* in support of Petitioner at 10-11, *KSR Int'l v. Teleflex, Inc.*, No. 04-1350 (Aug. 22, 2006) ("With so many components in each product, opportunities abound to seek patents for a combination of several components, no matter how obvious.")

It cannot be overstressed that the suggestion test is illusory and a misnomer. Where there is clearly no new or unexpected result, the court has simply stated that the combination was suggested by "the nature of the problem to be solved." *Ruiz*, 357 F.3d at 1276. In practice, however, the suggestion test does not really rely on a suggestion in the prior art. If a combination of known elements does not produce a new or unexpected result, the combination is obvious as it is within the inherent ability of the ordinary artisan to merely select elements from the prior art for their known purposes. *Sakraida*, 425 U.S. at 282. A suggestion need not exist to combine the elements because the problem at hand implied the combination of known elements producing their known functions. Even when courts have relied upon an explicit suggestion in the prior art, they are really stating that the combination of the known elements did not produce a new or unexpected result, because such a result was expressly disclosed in the prior art for solving the problem at hand.

c. This rule is proven to be consistent with patent policy as expressed by Congress.

The CAFC has been accused of creating the suggestion test absent any basis in the statute or in this Court's precedent. *See* Brief for Petitioner, *supra*, at 15-16.

However, nothing could be further from the truth. Instead, the CAFC's development and articulation of the suggestion test, discussed *infra*, is simply the normal function of lower appellate courts. It was the CAFC's duty to interpret § 103 and this Court's decisions to articulate a workable, reliable rule. The fact that the doctrine's label has caused a misinterpretation is unfortunate, but easily remedied.

An objective test is important for addressing many of § 103's requirements. First, the proposed rule prevents hindsight reconstruction, thus ensuring that the inquiry remains focused "at the time the invention was made." 35 U.S.C. § 103 (a). Second, an objective test prevents piecemeal dissection of a patent, focusing the inquiry instead to "the invention as a whole." *Id*. *See also Ruiz*, 357 F.3d at 1275. In addition, the rule also provides informed evaluation of the factual inquiries required by this Court. *Graham*, 383 U.S at 17-18.

Hindsight is a serious concern when evaluating a patent for obviousness. It is accepted that most inventions are combinations of known components. One who finds the basic components in various pieces of prior art and combines them together with the benefit of the applicant's disclosure "simply takes the inventor's disclosure as a blueprint" and fails to properly evaluate the obviousness of the invention. *In re Dembiczak*, 175 F.3d 994, 999 (Fed. Cir. 1999). A good example of this type of analysis is the examiner's argument in *In re Adams*, discussed, *supra*, at 15. Hindsight based reasoning necessarily takes into account knowledge that only became available after the applicant's disclosure, and is therefore specifically prohibited by § 103 and its mandate that the inquiry remain focused on "the time in which the invention was made."

An objective assessment is mandated to provide "assurance of an 'as a whole' assessment" under § 103. *Ruiz*, 357 F.3d at 1275. "Without this important requirement, an obviousness assessment might break an invention into its component parts (A + B + C)," and then find three references each showing one of the three parts, and "on that basis alone declare the invention obvious." *Id.* This type of reasoning "uses the invention as a roadmap" and discounts the value of whatever new result is achieved by the combination, contravening the purposes of § 103. *Id.*

III. There is more to the present invention than a mere selection of elements.

Finally, among the arguments presented in this case, one must not lose sight of the fact that the present invention is far more narrow or specific than the mere combination of an electronic control with an adjustable pedal assembly, with no additional function. Certainly, such a broadly stated claim could be obvious, but that is not the issue before the Court. In contradistinction, the '565 patent is based upon packaging of the components in a manner analogous to the packaging of the components in TI's pocket calculator.

The '565 patent specifically requires "an electronic control attached to said support ... [and] characterized by said electronic control being responsive ... as said pedal arm pivots about said pivot axis ...[and] the position of said pivot remain[ing] constant while said pedal arm moves." U.S. Patent No. 6,237,565 col.6, ll.27-35 (filed Aug. 22, 2000) (reference numbers omitted). Substantial factual inquiries need to be developed at the trial court to determine whether it was obvious to place the electronic control on the fixed and common pivot about which the pedal moves independently for operation and for adjustment of operational position. The

novelty of the claimed invention is the specific placement of the electronic control that allows the pivot to remain fixed during adjustment of the operational position of the pedal assembly. It is this feature that is conspicuously missing from the prior art. Although the prior art clearly shows both adjustable assemblies and electronic controls, no reference discloses the specific placement of the electronic control in the manner accomplished by the inventor of the '565 patent.

By understanding the subtle nuance in the novelty, the asserted claim is distinguished from other "combinations" that might lack an inventive contribution over the prior art. The factual record needs more development to adequately inform the obviousness analysis. This was recognized by the CAFC, and for this reason their decision should be *affirmed*.[6]

CONCLUSION

The law of patentability should prevent the application of hindsight and different subjective tests by different examiners, judges and juries. The test for obviousness should validate patents on historically significant inventions. The suggestion test has proven to be a misnomer in that there is never a "suggestion" when new and unexpected results are attained, and the "suggestion" is inherent in a mere selection and

---

[6] Although placement might seem unimportant, one should be reminded of the tale of GE consultant Charles Steinmetz who submitted an invoice of $10,000 after analyzing a complex system and marking the malfunctioning part with a piece of chalk. GE requested an itemized invoice, to which Charles reportedly responded: "Making chalk mark, $1. Knowing where to place it, $9,999." *See* Mary Bellis, *Charles Proteus Steinmetz – Inventor of the Alternating Current*, About Inventors, *at* http://inventors.about.com/od/astartinventions/a/Steinmetz.htm.

combination of elements each performing as expected. Therefore the "suggestion" terminology should be rejected, and a patent claim should continue to be valid when the new combination produces a new or unexpected result absent in the prior art. However, if the combination constitutes nothing more than a mere selection of old elements each performing its known function, without a new or unexpected result, it is obvious to one of ordinary skill in the art. These rules comport with all of the decisions of this Court and the lower courts. The invention at issue here does not fall under the category of merely selecting features from the prior art because the prior art does not disclose the novel placement of the electronic control on the fixed pivot. For these reasons, and with this qualification, the decision of the Court of Appeals for the Federal Circuit should be *affirmed*, so that the case may return to the district court to resolve these issues of fact.

Respectfully Submitted,

HAROLD W. MILTON, JR.*
PATRICK R. ANDERSON
Counsel for Amicus Curiae
Dickinson Wright PLLC
38525 Woodward Avenue
Bloomfield Hills, Michigan 48304
(248) 433-7200

* *Counsel of Record*

136B (34)

No. 04-1350

FILED
OCT 16 2006
OFFICE OF THE CLERK
SUPREME COURT, U.S.

IN THE

Supreme Court of the United States

KSR INTERNATIONAL CO.,

Petitioner,

v.

TELEFLEX INC. and
TECHNOLOGY HOLDING CO.,

Respondents.

ON WRIT OF CERTIORARI TO THE
UNITED STATES COURT OF APPEALS
FOR THE FEDERAL CIRCUIT

BRIEF FOR AMICUS CURIAE NEW YORK INTELLECTUAL PROPERTY LAW ASSOCIATION IN SUPPORT OF RESPONDENTS

MARYLEE JENKINS
President
New York Intellectual Property Law Association
ARENT FOX PLLC
1675 Broadway Avenue
New York, NY 10019
(212) 484-3900

ROCHELLE K. SEIDE
Counsel of Record
JOHN K. HSU
ARENT FOX PLLC
1675 Broadway Avenue
New York, NY 10019
(212) 484-3900

Counsel for Amicus Curiae

204023

COUNSEL PRESS
(800) 274-3321 • (800) 359-6859

TABLE OF CONTENTS

	Page
Statement of Interest of Amicus Curiae	1
Question Presented	2
Position of Amicus Regarding Question Presented	2
Summary of the Argument	2
Argument	4
I. Congress Enacted 35 U.S.C. § 103 To Provide An Objective And Reliable Standard For Determining Obviousness	4
A. Before Enactment of Section 103, the Difficulty of Determining Obviousness Resulted in an Uneven Application of the Law	4
B. Congress Enacted Section 103 to Codify the Principle of *Hotchkiss* and to Provide an Objective Standard to Test Obviousness	9
II. In *Graham*, This Court Set Forth A Stable Framework For Determining Obviousness Under Section 103, But Did Not Fully Address How To Avoid The Use Of Hindsight Analysis	12
A. In *Graham*, the Court Used Its Implicit Authority to Further Implement Standards for Section 103	12

Contents

Page

B. This Court Recognized in *Graham* and its Antecedents that the Potential for Hindsight Presented a Major Problem for the Non-Obviousness Analysis 14

III. The Federal Circuit's Teaching-Suggestion-Motivation Test Effectively Resolves Hindsight Problems 16

A. The Test Furthers the Goals of Section 103 and Works Well Within the Framework of *Graham* 16

B. Absent the Teaching-Suggestion-Motivation Test, Many Valuable Inventions Would Be Susceptible to Invalidation by Judicial Hindsight, or May Be Found Unpatentable in the First Place 18

C. The Teaching-Suggestion-Motivation Test Allows for Flexibility 19

D. The Teaching-Suggestion-Motivation Test Protects Inventors From Arbitrary and Erroneous Decisions by Examiners and the Courts 22

Conclusion 24

TABLE OF CITED AUTHORITIES

Page

CASES

ACS Hosp. Sys., Inc. v. Montefiore Hosp., 732 F.2d 1572 (Fed. Cir. 1984) 16

Alza Corp. v. Mylan Labs., Inc., No. 06-1019 (Fed. Cir. Sept. 6, 2006) 17, 20, 21

C. & A. Potts & Co. v. Creager, 155 U.S. 597 (1895) 7

Cross Med. Prod., Inc. v. Medtronic Sofamor Danek, Inc., 424 F.3d 1293 (Fed. Cir. 2005) 20

Cuno Eng'g Corp. v. Automatic Devices Corp., 314 U.S. 84 (1941) 7

Diamond Rubber Co. v. Consol. Rubber Tire Co., 220 U.S. 428 (1911) 14, 15

Dystar Textilfargen GMBH & Co. Deutschland KG v. C.H. Patrick Co., No. 06-1088 (Fed. Cir. Oct. 3, 2006) 20, 21, 23

Graham v. John Deere Co., 383 U.S. 1 (1966) ... *passim*

Great Atl. & Pac. Tea Co. v. Supermarket Equip. Corp., 340 U.S. 147 (1950) 7, 8, 10

Hotchkiss v. Greenwood, 52 U.S. (11 How.) 248 (1850) ..... *passim*

Cited Authorities

	Page
In re Ahlert, 424 F.2d 1088 (C.C.P.A. 1970)	21
In re Bergel, 292 F.2d 955 (C.C.P.A. 1961)	16
In re Fridolph, 30 C.C.P.A. 939 (1943)	16
In re Imperato, 486 F.2d 585 (C.C.P.A. 1973)	16
In re Kahn, 441 F.3d 977 (Fed. Cir. 2006)	20
In re Napier, 55 F.3d 610 (Fed. Cir. 1995)	20
Interconnect Planning Corp. v. Feil, 774 F.2d 1132 (Fed. Cir. 1985)	16
Jungersen v. Ostby & Barton Co., 335 U.S. 560 (1949)	7
Loom Co. v. Higgins, 105 U.S. 580 (1881)	14
Marconi Wireless Tel. Co. of Am. v. United States, 320 U.S. 1 (1943)	15, 18
McClain v. Ortmayer, 141 U.S. 419 (1891)	5
McGinley v. Franklin Sports, Inc., 262 F.3d 1339 (Fed. Cir. 2001)	17
Monroe Auto Equip. Co. v. Heckethorn Mfg. & Supply Co., 332 F.2d 406 (1964)	14
Nat'l Steel Car, Ltd. v. Canadian Pac. Ry., Ltd., 357 F.3d 1319 (Fed. Cir. 2004)	20

Cited Authorities

Page

Reckendorfer v. Faber, 92 U.S. 347 (1875) 7

Smith v. Whitman Saddle Co., 148 U.S. 674 (1893) .. 7

Washburn & Moen Manuf'g Co. v. Beat'em All Barbed-Wire Co. (The Barbed Wire Case), 143 U.S. 275 (1892) 18, 19

W.L. Gore & Assocs., Inc. v. Garlock, Inc., 721 F.2d 1540 (Fed. Cir. 1983) 16

STATUTES

35 U.S.C. § 103 ..... *passim*

LEGISLATIVE MATERIALS

H. Rep. No. 1923 (May 12, 1952), *as reprinted in* 1952 U.S.C.C.A.N. 2394 11

National Patent Planning Comm., Report, H.R. Doc. No. 239 (June 18, 1943) 9

S. Rep. No. 1979 (June 27, 1952), *as reprinted in* 1952 U.S.C.C.A.N. 2394 11

Subcomm. on Domestic and Int'l Scientific Planning and Analysis of the House Comm. on Science and Tech., 94th Cong., Background Materials on Government Patent Policies: Reports of Committees, Commissions, and Major Studies xi (Comm. Print 1976) 8

Cited Authorities

Page

LEGAL SCHOLARSHIP

Myron Cohen, *Nonobviousness and the Circuit Courts of Appeals-Twenty-Five Years in Review, in* NONOBVIOUSNESS–THE ULTIMATE CONDITION OF PATENTABILITY (John F. Witherspoon ed., BNA Books 1980) 12

Christopher Anthony Cotropia, *Nonobviousness and the Federal Circuit: An Empirical Analysis of Recent Case Law* 82 NOTRE DAME L. REV. (forthcoming Feb. 2007) (manuscript *available at* http://papers.ssrn.com/so13/papers.cfm?abstract_ id=933192) 21

P.J. Federico, *Commentary on the New Patent Act, reprinted in* 75 J. Pat. & Trademark Off. Soc'y 1614 (1993) 11, 12

Edward Gregg, *Tracing the Concept of "Patentable Invention,"* 13 VILL. L. REV. 98 (1967) 7

Irving Kayton, *Nonobviousness of the Novel Invention – 35 U.S.C. § 103, in* PATENT PREPARATION AND PROSECUTION PRACTICE (Irving Kayton ed., Patent Resources Institute 1977), *reprinted in* NONOBVIOUSNESS–THE ULTIMATE CONDITION OF PATENTABILITY (John F. Witherspoon ed., BNA Books 1980) 5

Cited Authorities

Page

Giles S. Rich, *Congressional Intent–Or, Who Wrote the Patent Act of 1952? in* PATENT PROCUREMENT AND EXPLOITATION (BNA Inc. 1963), *reprinted in* NONOBVIOUSNESS–THE ULTIMATE CONDITION OF PATENTABILITY (John F. Witherspoon ed., BNA Books 1980) 7, 9, 10

Giles S. Rich, *Laying the Ghost of the "Invention" Requirement*, 1 Am. Pat. L. Ass'n Q.J. 26 (1972), *reprinted in* 14 Fed. Cir. B.J. 163 (2004) .. 4, 5, 6, 11, 12

Giles S. Rich, *Why and How Section 103 Came to Be, in* NONOBVIOUSNESS–THE ULTIMATE CONDITION OF PATENTABILITY (John F. Witherspoon ed., BNA Books 1980) 8

George M. Sirilla & Giles S. Rich, *35 U.S.C. . . . §103: From Hotchkiss to Hand to Rich, the Obvious Patent Law Hall-of-Famers*, 32 J. Marshall L. Rev. 437 (1999) 6, 7

MISCELLANEOUS

Brief for the United States as Amicus Curiae Supporting Petitioner at 16, *KSR Int'l Co. v. Teleflex, Inc.*, No. 04-1350 (U.S. Aug. 2006) 18, 19, 22, 23

Federal Trade Commission, To Promote Innovation: The Proper Balance of Competition and Patent Law and Policy, Ch. 4 (October 2003) 16, 22

Cited Authorities

Page

Judge Giles S. Rich, Remarks at the 75th Annual Dinner of the NYIPLA (May 1997), *in* 37 NYIPLA BULL. 5, May/June 1997 11

Press Release, U.S. Patent and Trademark Office, Patent & Trademark Office Mourns Death of Judge Giles S. Rich (June 10, 1999), *available at* http://www.uspto.gov/web/offices/com/speeches/99-14.htm 5

Symposium on Patents, Summary of Proceedings, Section of Patents, Trademark and Copyright Law (Chicago: American Bar Center, 1962) 9

U.S. Patent & Trademark Office, *Manual of Patent Examining Procedure*, § 2144.03 (8th ed. rev. 3d 2006) 21

U.S. Patent and Trademark Office, U.S. Patent Statistics Chart Calendar Years 1963-2005 (2006), *available at* http://www.uspto.gov/go/taf/us_stat.htm 22

John Langdon, HORSES, OXEN AND TECHNOLOGICAL INNOVATION: THE USE OF DRAUGHT ANIMALS IN ENGLISH FARMING FROM 1066 TO 1500 (Cambridge University Press 1986) 19

James V. DeLong, *Mind Over Matter*, REASON (June 1998), *available at* http:// reason.com/9806/fe.delong.shtml 19

STATEMENT OF INTEREST OF AMICUS CURIAE

This brief amicus curiae is submitted in support of Respondents by the New York Intellectual Property Law Association (the "NYIPLA" or the "Association"), a professional association of more than 1,300 attorneys whose interests and practices lie in the area of patent, copyright, trademark, trade secret, and other intellectual property law.[1]

NYIPLA members include in-house attorneys working for businesses that own, enforce and challenge patents as well as attorneys in private practice who represent both patent owners and accused infringers. NYIPLA members frequently engage in patent licensing matters, representing both patent licensors and licensees.

NYIPLA members represent both plaintiffs and defendants in infringement litigation and also regularly participate in proceedings before the United States Patent and Trademark Office ("PTO"), including representation of applicants for patents and parties to interferences. A substantial percentage of NYIPLA members participate actively in patent litigation.

NYIPLA has a particularly strong interest in the meaning and application of 35 U.S.C. § 103 because a past president of the Association, Judge Giles S. Rich, had a significant involvement in the drafting of the statute. In particular, Judge Rich co-authored Section 103 and spoke on behalf of the Association before Congress and the legal community to educate and champion the purpose and application of the Section.

---

1. Pursuant to Sup. Ct. R. 37.6, the NYIPLA and its counsel represent that they have authored this brief in whole, and that no person or entity other than the Association and its counsel have made a monetary contribution to the preparation or submission of this brief. The parties have consented to the filing of this brief in papers docketed with this Court on July 19 and July 31, 2006.

QUESTION PRESENTED

Whether the Federal Circuit erred in holding that a claimed invention cannot be held "obvious," and thus unpatentable under 35 U.S.C. § 103(a), in the absence of some proven "'teaching, suggestion or motivation' that would have led a person of ordinary skill in the art to combine the relevant prior art teachings in the manner claimed"?

POSITION OF AMICUS REGARDING QUESTION PRESENTED

The Association respectfully submits that the Federal Circuit's teaching-suggestion-motivation test has provided an objective, predictable, and reliable means of applying Section 103 and preventing hindsight analysis from plaguing the obviousness determination. The test is consistent with this Court's precedent and has served the patent system well. Consequently, the Federal Circuit did not err in its decision below.

SUMMARY OF THE ARGUMENT

Over a century and a half ago, this Court recognized in *Hotchkiss v. Greenwood* the necessity of a non-obviousness requirement in our patent system. Both judges and patent examiners, however, had difficulty applying the requirement, which resulted in an uneven application of the law. Even worse, judges and examiners often arbitrarily determined patentability based on subjective standards.

In response, Congress enacted 35 U.S.C. § 103 to codify the non-obviousness requirement and provide an objective standard for determining obviousness. Subsequently, this Court provided, in *Graham v. John Deere Co.*, a robust framework for deciding the obviousness issue. This Court,

however, did not fully address how to prevent judges and patent examiners from allowing hindsight to cloud their evaluation of obviousness. To fill that void, the Federal Circuit, building upon the precedents of the Court of Customs and Patent Appeals ("CCPA"), developed the teaching-suggestion-motivation test. With this test, the Federal Circuit ensures that there is some basis, either explicit or implicit, in the prior art for an evaluator's finding that the invention is obvious and prevents the unjustified use of hindsight to invalidate patent claims.

The teaching-suggestion-motivation test serves this purpose well. The test is flexible and allows judges and patent examiners to reject obvious inventions while protecting inventors from the invalidation of their patent claims based on nothing more than the inventor's own disclosure of his invention. Absent the protection of the teaching-suggestion-motivation test, many truly inspired inventions are liable to be found obvious based solely on the disclosures contained in their own applications. Because the case at bar is entirely consistent with this Court's jurisprudence and the statutory framework, the decision in favor of Respondents should be upheld.

ARGUMENT

I. CONGRESS ENACTED 35 U.S.C. § 103 TO PROVIDE AN OBJECTIVE AND RELIABLE STANDARD FOR DETERMINING OBVIOUSNESS

A. Before Enactment of Section 103, the Difficulty of Determining Obviousness Resulted in an Uneven Application of the Law

In *Hotchkiss v. Greenwood*, this Court firmly grafted onto the patent law a requirement that an invention, in addition to being novel and useful, had to be non-obvious to warrant patent protection. 52 U.S. (11 How.) 248 (1850). Although clearly establishing a non-obviousness requirement, the Court did not set forth a clear standard to determine whether an invention met the requirement. As a result, subsequent courts struggled to implement this requirement, relying on varying tests, or at worse, no test at all. *See* Giles S. Rich, *Laying the Ghost of the "Invention" Requirement*, 1 Am. Pat. L. Ass'n Q.J. 26 (1972), *reprinted in* 14 Fed. Cir. B.J. 163, 166 (2004) [hereinafter *Laying the Ghost*]. Indeed, this Court later noted the difficulty judges faced by stating that:

> [t]o say that the act of invention is the production of something new and useful does not solve the difficulty of giving an accurate definition, since the question of what is new, as distinguished from that which is a colorable variation of what is old, is usually the very question in issue. To say that it involves an operation of the intellect, is a product of intuition, or of something akin to genius, as distinguished from mere mechanical skill, draws one somewhat nearer to an appreciation of the true distinction, but it does not adequately express the idea. The truth is, the word [invention] cannot be

> defined in such manner as to afford any substantial aid in determining whether a particular device involves an exercise of the inventive faculty or not.

McClain v. Ortmayer, 141 U.S. 419, 426-27 (1891).

To implement the *Hotchkiss* requirement, courts proceeded to develop an amorphous "standard of invention" or "requirement for invention" to evaluate obviousness which, unfortunately, served only as a label that gave no insight to the analysis. *See Laying the Ghost*, at 166. This standard led to a circular reasoning in which an invention became patentable if the court found that it resulted from an "inventive act." In fact, many in the patent bar noted that the use of the term "invention" in the obviousness analysis imparted a "mystical, indefinable, and unknowable quality or quantity" to the analysis. Irving Kayton, *Nonobviousness of the Novel Invention–35* U.S.C. § 103, *in* PATENT PREPARATION AND PROSECUTION PRACTICE (Irving Kayton ed., Patent Resources Institute 1977), *reprinted in* NONOBVIOUSNESS–THE ULTIMATE CONDITION OF PATENTABILITY, at 2:101, 2:102 (John F. Witherspoon ed., BNA Books 1980).

Judge Giles S. Rich,[2] a co-author of Section 103, understood well the problems that arose from the vague nature of the standard and the state of the law. Judge Rich found that the standard of invention left no yardstick as to how to determine if something was patentable and noted that

---

2. Judge Rich, a former president of the Association, left an impressive legacy in patent law and was recognized by the PTO as "the single most important figure in twentieth century intellectual property law." Press Release, U.S. Patent and Trademark Office, Patent & Trademark Office Mourns Death of Judge Giles S. Rich (June 10, 1999), *available at* http://www.uspto.gov/web/offices/com/speeches/99-14.htm. See Section IB of this brief for a description of Judge Rich and the Association's contribution to the drafting of Section 103.

the ambiguous test predictably led to a "confusing state of the law of patent validity that followed in the wake of *Hotchkiss*." George M. Sirilla & Giles S. Rich, *35 U.S.C. . . . §103: From Hotchkiss to Hand to Rich, the Obvious Patent Law Hall-of-Famers*, 32 J. Marshall L. Rev. 437, 461 (1999) [hereinafter *Hall-of-Famers*]; *see also Laying the Ghost* at 166-67.

With nothing more than the vague notion of "invention" to guide them, the courts, and the PTO relying on court decisions, often determined patentability in an arbitrary fashion based on the personal views of judges and examiners as to what should be patentable. *Laying the Ghost* at 167. Judge Rich noted that:

> [w]hat it all came down to, in final analysis, in the Patent Office or in court, was that if the Office or a judge was persuaded that an invention was *patentable* (after hearing all the praise by the owners and all the denigration by the opposition) then it *was* an "invention." How that decision was reached was rarely revealed. Everyone realized it was subjective.

Id. In turn, courts applied the law unevenly due to the lack of a predictable and objective standard.

This Court also contributed to the difficulty in formulating a reliable test to determine whether an invention was non-obvious, and thus patentable. *See Hall-of-Famers*, at 468 (noting that the Court's decisions from 1850 to 1891 "were at best inconsistent, and at worst confusing, with respect to any methodology for determining whether or not a patented device amounted to a truly patentable 'invention'" and from 1892 to 1930, the Court used various tests for determining the existence of "invention" with mixed results).

On the one hand, the Court sometimes relied on a severe requirement of "inventive genius" or "flash of genius." *See, e.g., Cuno Eng'g Corp. v. Automatic Devices Corp.*, 314 U.S. 84, 91 (1941); *Reckendorfer v. Faber*, 92 U.S. 347, 357 (1875). On the other hand, the Court began applying the now well-known secondary considerations of non-obviousness without any analysis of "inventive genius." *See, e.g., C. & A. Potts & Co. v. Creager*, 155 U.S. 597, 608-10 (1895); *Smith v. Whitman Saddle Co.*, 148 U.S. 674, 681-82 (1893).

Moreover, from 1930 to 1952 the Court appeared to have a harshly critical view of patents and, in particular, patents directed to mechanical devices comprised of combinations of known elements. *See Hall-of-Famers*, at 473 ("[T]he Supreme Court embarked on a period of what can only be termed disfavor of, if not outright hostility toward, patents."); Edward Gregg, *Tracing the Concept of "Patentable Invention,"* 13 Vill. L. Rev. 98 (1967). Members of the patent bar, accordingly, feared that the patent system could be gutted absent intervention. Giles S. Rich, *Congressional Intent–Or, Who Wrote the Patent Act of 1952? in* PATENT PROCUREMENT AND EXPLOITATION (BNA Inc. 1963), *reprinted in* NONOBVIOUSNESS–THE ULTIMATE CONDITION OF PATENTABILITY, at 1:3 (John F. Witherspoon ed., BNA Books 1980) [hereinafter *Congressional Intent*]. ("The practical value of patents was being downgraded" and "courts were, on the average, applying a too stringent test for 'invention.'"). Likewise, this Court's hostility towards patents caused Justice Jackson to lament that "the only patent that is valid is one which this Court has not been able to get its hands on." *Jungersen v. Ostby & Barton Co.*, 335 U.S. 560, 572 (1949) (Jackson, J., dissenting).

In *Great Atlantic & Pacific Tea Co. v. Supermarket Equipment Corp.*, 340 U.S. 147 (1950), Justice Jackson, writing for the Court, one year after the above lament,

invalidated a patent on a cashier's counter that had been "widely adopted and successfully used." *Id.* at 149. In reaching its decision, the Court asserted that the lower courts had misapplied the "standard of invention" for inventions that comprised combinations of old elements. *Id.* at 154. Moreover, the Court indicated that the proper standard took into account a synergistic effect of the elements. *Id.* at 152. ("The conjunction or concert of known elements must contribute something; only when the whole in some way exceeds the sum of its parts is the accumulation of old devices patentable.").

Prompted by the seriousness of the problem facing the patent system due to the vague "standard of invention," the National Patent Planning Commission ("NPPC")[3] voiced its concerns in reports that were widely circulated amongst the patent bar at that time. *See* Giles S. Rich, *Why and How Section 103 Came to Be, in* NONOBVIOUSNESS–THE ULTIMATE CONDITION OF PATENTABILITY, at 1:201 (John F. Witherspoon ed., BNA Books 1980). Particularly, the NPPC found:

> One of the greatest technical weaknesses of the patent system is the lack of a definitive yardstick as to what is invention. To provide such a yardstick and to assure that the various courts of law and the Patent Office shall use the same standards, several changes are suggested. It is proposed that Congress shall declare a national standard whereby patentability of an invention

3. President Roosevelt appointed the Commission by Executive Order in 1941 to plan and utilize in times of peace the nation's expanded industrial capacity developed during war. Subcomm. on Domestic and Int'l Scientific Planning and Analysis of the House Comm. on Science and Tech., 94th Cong., Background Materials on Government Patent Policies: Reports of Committees, Commissions, and Major Studies xi (Comm. Print 1976).

> shall be determined by the objective test as to its advancement of the arts and sciences.

National Patent Planning Comm., Report, H.R. Doc. No. 239 at 6, 10 (June 18, 1943).

B. Congress Enacted Section 103 to Codify the Principle of *Hotchkiss* and to Provide an Objective Standard to Test Obviousness

In view of the difficulty that courts and the PTO faced when determining obviousness, Congress, with the guidance of patent practitioners from private practice, industry, and the PTO, enacted the Patent Act of 1952.[4] In enacting Section 103, Congress set forth a succinct directive which could serve as a strong foundation to build an objective standard for assessing obviousness.

Understanding the need for a comprehensive revision of the patent laws to address issues such as non-obviousness, the House Subcommittee on Patents, Trademarks, and Copyrights assigned the task of drafting a patent bill to P.J. Federico, the then Examiner-in-Chief at the PTO. *Congressional Intent*, at 1:4. Mr. Federico collaborated with a select group of patent practitioners, including Judge Rich,

---

4. Representative Shepard J. Crumpacker, a member of the House Subcommittee on Patents during the enactment of the Patent Act, emphasized that "when the courts, in seeking to interpret the language of the Act, go through the ritual of seeking to ascertain the 'intent of Congress' in adopting same, they would do well to look to the writings of these men—Federico [the Examiner-in-Chief of the PTO], Rich, Harris [counsel for the Subcommittee], and the others —as they, far more than any member of the House or Senate, knew and understood what was intended by the language used." *See* Symposium on Patents, Summary of Proceedings, Section of Patents, Trademark and Copyright Law (Chicago: American Bar Center, 1962).

Paul Rose, who was the American Patent Law Association's chairman of the Practice Committee, and Henry Ashton, who was the chairman of the National Council of Patent Law Associations. *Id.* at 1:5-1:6.

Notably, Judge Rich, the Association's President during the years 1950 and 1951, was instrumental in the creation and drafting of Section 103. *Congressional Intent* at 1:5-1:10. Judge Rich, along with Mr. Rose, served as the two-man Drafting Committee for the Patent Act of 1952 formed by the National Council of Patent Law Associations. *Id.* at 1:6. The Drafting Committee was tasked with revising the preliminary draft of the proposed patent legislation consistent with the consensus views of patent practitioners. *Id.* Accordingly, the Drafting Committee reviewed hundreds of comments from interested associations and individuals and after distilling the information and exercising their own judgment, proposed revisions to the preliminary draft. *Id.* Judge Rich and Mr. Rose subsequently worked closely with Mr. Federico and Mr. Ashton to submit a revised draft of the proposed legislation. *Id.* In turn, the four worked closely with Subcommittee on Patents of the Committee on the Judiciary of the House of Representatives to enact the statute. *Id.* at 1:7-1:10.

Not coincidently, those four key drafters of the 1952 Patent Act met the day after the Supreme Court issued its decision in the *Great Atlantic & Pacific Tea Co.* case. *Congressional Intent* at 1:7, 1:8. As acknowledged by Judge Rich, the case clinched their decision to include Section 103 in the bill because the Court invalidated the patent-in-suit based on the very problem plaguing the patent system, i.e., the vague "standard of invention." *Id.* at 1:8; *Great Atl. & Pac. Tea Co.*, 340 U.S. at 154 ("[A] standard of invention appears to have been used that is less exacting than that required where a combination is made up of old components.

It is on this ground that the judgment below is reversed."). The drafters of the Patent Act included Section 103 "to enact a statutory substitute that would make more sense, would apply to all kinds of inventions, would restrict the courts in their arbitrary, *a priori* judgments on patentability, and that, above all, would serve as a uniform *standard of patentability*." *Laying the Ghost* at 169-70.[5]

Accordingly, Congress included Section 103 in the Patent Act for uniformity and definiteness of the application of the non-obvious analysis. S. Rep. No. 1979 (June 27, 1952), *as reprinted in* 1952 U.S.C.C.A.N. 2394, 2400; H. Rep. No. 1923 (May 12, 1952), *as reprinted in* 1952 U.S.C.C.A.N. 2394, 2400 ("[t]his section [103] is added to the statute for uniformity and definiteness"), with the intention that Section 103 "should have a stabilizing effect and minimize great departures which have appeared in some cases." *Id. See also* P.J. Federico, *Commentary on the New Patent Act, reprinted in* 75 J. Pat. & Trademark Off. Soc'y 161, 184 (1993).

Unfortunately, the courts were slow to incorporate the new standard for obviousness and instead, continued in an arbitrary and uneven application of the law. *See Laying the*

---

5. Judge Rich recollected on the important role the Association played in the enactment of Section 103 by stating that Section 103

> replaced the vague and undefinable judge-made law requiring the presence of "invention." . . . Again it was this association [NYIPLA] through what was then called the Committee on Patent Law and Practice of the then NYPLA, on which I was servicing, that conceived the idea of replacing the requirement of "invention" with a defined nonobviousness provision and putting it in the statute, where there was then nothing whatever on that judge-made requirement.

Judge Giles S. Rich, Remarks at the 75th Annual Dinner of the NYIPLA (May 1997), *in* 37 NYIPLA BULL. 5, May/June 1997.

Ghost, at 164; *see also* Myron Cohen, N*onobviousness and the Circuit Courts of Appeals-Twenty-Five Years in Review*, *in* NONOBVIOUSNESS–THE ULTIMATE CONDITION OF PATENTABILITY, at 3:1 (John F. Witherspoon ed., BNA Books 1980). Likewise, the PTO still relied on the vague "standard of invention." *See Laying the Ghost*, at 172-73 (noting that when Judge Rich came to the CCPA in 1956, he found that four years after the enactment of Section 103, the CCPA continued to ignore the statute, with the court deciding cases with rejected claims based on a lack of invention, and the solicitor of the PTO still arguing on that basis). Section 103 might have been doomed to the same uncertainties that prevailed before its enactment due to judicial and administrative inertia. This Court, however, set forth a stable legal framework for deciding obviousness challenges, consistent with Section 103, with its decision in *Graham v. John Deere Co.*, 383 U.S. 1 (1966).

II. IN *GRAHAM*, THIS COURT SET FORTH A STABLE FRAMEWORK FOR DETERMINING OBVIOUSNESS UNDER SECTION 103, BUT DID NOT FULLY ADDRESS HOW TO AVOID THE USE OF HINDSIGHT ANALYSIS

A. In *Graham*, the Court Used Its Implicit Authority to Further Implement Standards for Section 103

Congress recognized that the proper application of Section 103 would require further development either by Congress or the courts. *See* P.J. Federico, *Commentary on the New Patent Act*, *reprinted in* 75 J. Pat. & Trademark Off. Soc'y 161, 184 (1993):

> The problem of what is obvious and hence not patentable is still of necessity one of judgment. The statute does not purport to categorize the

> particular criteria according to which the judgment is to be exercised, in fact, the Revision Note under section 103 indicates that the section would also serve as a basis for the addition at a later time of some criteria which may be worked out.

In turn, this Court took a major step forward in *Graham* by setting forth a stable framework to determine obviousness under Section 103. The courts and the PTO are to analyze nonobviousness of an invention using what have become known as the "*Graham* Factors": (1) evaluation of the scope and content of the prior art; (2) differences between the prior art and the claims at issue; (3) the level of ordinary skill in the pertinent art; and (4) secondary considerations, such as commercial success, long felt but unsolved needs, and the failure of others. *Graham*, 383 U.S. at 17-18.

When arriving at this framework, the Court recognized that Congress intended Section 103 to codify the law of obviousness first articulated in *Hotchkiss*. *Graham*, 383 U.S. at 16 ("We conclude that the section was intended merely as a codification of judicial precedents embracing the *Hotchkiss* condition. . . ."). The Court, however, could not have been endorsing the vague and uncertain jurisprudence that had existed before enactment of Section 103, as described above. Instead, the Court recognized Congress's clear intent to codify the necessity of a non-obviousness standard based on objective criteria. Indeed, the Court set forth an excellent, although incomplete, means of effectuating the aims of Section 103.

B. This Court Recognized in *Graham* and its Antecedents that the Potential for Hindsight Presented a Major Problem for the Non-Obviousness Analysis

In *Graham*, the Court recognized the difficulty of resisting the use of hindsight in evaluating patentability of an invention and patent validity. *Graham*, 383 U.S. at 36 (quoting *Monroe Auto Equip. Co. v. Heckethorn Mfg. & Supply Co.*, 332 F.2d 406, 412 (1964) (Secondary considerations "may also serve to 'guard against slipping into use of hindsight,' and to resist the temptation to read into the prior art the teachings of the invention in issue."). Indeed, this is not the first time the Court recognized the problem and, in fact, it has long realized the temptation and peril of using hindsight. For example, as early as 1881, the Court noted the impermissible use of hindsight by rejecting the temptation to resort to it when it upheld the patent-in-suit in *Loom Co. v. Higgins*, 105 U.S. 580 (1881), noting:

> At this point we are constrained to say that we cannot yield our assent to the argument, that the combination of the different parts or elements for attaining the object in view was so obvious as to merit no title to invention. Now that it has succeeded, it may seem very plain to any one that he could have done it as well.

Id. at 591.

In 1911, the Court again criticized the use of hindsight when it also upheld the patent-in-suit in *Diamond Rubber Co. v. Consolidated Rubber Tire Co.*, 220 U.S. 428 (1911), finding:

> Knowledge after the event is always easy, and problems once solved present no difficulties,

> indeed, may be represented as never having had any, and expert witnesses may be brought forward to show that the new thing which seemed to have eluded the search of the world was always ready at hand and easy to be seen by a merely skillful attention.

Id. at 435.

Notably, in *Marconi Wireless Telegraph Co. of America v. United States*, 320 U.S. 1 (1943), Justice Frankfurter specifically warned against the unjustified use of hindsight to invalidate a patent, stating:

> Reconstruction by hindsight, making obvious something that was not at all obvious to superior minds until someone pointed it out,–this is too often a tempting exercise for astute minds. The result is to remove the opportunity of obtaining what Congress has seen fit to make available. . . . To find in 1943 that what Marconi did really did not promote the progress of science because it had been anticipated is more than a mirage of hindsight.

Id. at 62-63 (Frankfurter, J., dissenting).

Thus in *Graham*, the Court continued to voice its concern with the impermissible use of hindsight but did not fully develop safeguards against such improper use. The Court provided a robust framework for assessing obviousness and an admonition that hindsight should be kept from affecting the obviousness analysis. The teaching-suggestion-motivation test developed and used by the Federal Circuit (and its predecessor court, the CCPA) has furthered this Court's directive against resorting to impermissible hindsight analysis in determining whether an invention is non-obvious and thus worthy of patent protection.

III. THE FEDERAL CIRCUIT'S TEACHING-SUGGESTION-MOTIVATION TEST EFFECTIVELY RESOLVES HINDSIGHT PROBLEMS

A. The Test Furthers the Goals of Section 103 and Works Well Within the Framework of *Graham*

While the Court in *Graham* provided the guiding principles for the application of Section 103, the Federal Circuit developed the teaching-suggestion-motivation test to fill the gap not fully addressed in *Graham*.[6] The Federal Circuit developed the test to ensure that the patent system would have a reliable, objective test to protect inventors from a bias or temptation to use hindsight. In turn, the Federal Circuit has instilled an objectivity and predictability to the obviousness analysis.[7] At its core, the teaching-suggestion-motivation test is premised on the notion that the obviousness analysis should be properly grounded on some concrete reason other than hindsight. *See Interconnect Planning Corp. v. Feil*, 774 F.2d 1132, 1143 (Fed. Cir. 1985) (citing *ACS Hosp. Sys., Inc. v. Montefiore Hosp.*, 732 F.2d 1572, 1577 n.14 (Fed. Cir. 1984)) ("When prior art references require

6. There is no single case in which the Federal Circuit announced the teaching-suggestion-motivation test. Rather the test has developed from a long line of cases, some of which even predate the enactment of Section 103, which recognize the importance of protecting the patent evaluation process from the scourge of hindsight analysis. *See, e.g., W.L. Gore & Assocs., Inc. v. Garlock, Inc.*, 721 F.2d 1540, 1553 (Fed. Cir. 1983); *In re Imperato*, 486 F.2d 585, 587 (C.C.P.A. 1973); *In re Bergel*, 292 F.2d 955, 956-57 (C.C.P.A. 1961); *In re Fridolph*, 30 C.C.P.A. 939, 942 (1943).

7. Even the Federal Trade Commission ("FTC"), in its widely cited report on the U.S. patent system, found that "the Federal Circuit's application of the suggestion test arguably has the virtue of certainty and predictability." Federal Trade Commission, To Promote Innovation: The Proper Balance of Competition and Patent Law and Policy, Ch. 4 at 13 (October 2003) [hereinafter FTC Report].

selective combination by the court to render obvious a subsequent invention, there must be some reason for the combination other than the hindsight gleaned from the invention itself."). This forces the analysis to be based on evidence—not speculation. *See Alza Corp. v. Mylan Labs., Inc.*, No. 06-1019, slip op. at 5-6 (Fed. Cir. Sept. 6, 2006) ("Our anti-hindsight jurisprudence is a test that rests on the unremarkable premise that legal determinations of obviousness, as with such determinations generally, should be based on evidence rather than on mere speculation or conjecture.").

The need for protection from the use of hindsight is even more pronounced in cases involving mechanical inventions, such as the one at bar.[8] There is a very real risk that familiarity with mechanical principles and apparatus, which would not occur with regard to inventions directed to the chemical or electrical fields, will breed a false sense of intuition or understanding and lead to a more prevalent use of hindsight with regard to mechanical inventions. *See McGinley v. Franklin Sports, Inc.*, 262 F.3d 1339, 1351 (Fed. Cir. 2001) ("When the art in question is relatively simple, as is the case here, the opportunity to judge by hindsight is particularly tempting."). By requiring concrete evidence to support the patent examiner's or court's determination, the teaching-suggestion-motivation test eliminates the arbitrary use of vague tests which, in reality, are no more than the application of hindsight. Hence, the test strongly protects against the very situations that plagued the patent system when the

8. The Association does not advocate that any type of disparate test be applied to different types of inventions, but simply highlight the additional hazards posed to inventors of mechanical devices. Rather, the Association notes that the teaching-suggestion-motivation test is well suited to protect inventors in all disciplines from the hazards of hindsight bias. A single uniform test for all inventions accordingly does not allow for the tendency to invalidate or refuse to issue patents based on a bias toward a certain technology.

dubious "standard of invention" test held sway prior to the enactment of Section 103.

Petitioner and its supporting amici provide no credible way for courts to protect against hindsight entering into the analysis, absent the teaching-suggestion-motivation test. Indeed, the Solicitor General merely reassures that "[c]ourts are fully capable of distinguishing between obvious and nonobvious inventions without undue influence from the claimed invention itself." Brief for the United States as Amicus Curiae Supporting Petitioner at 16, *KSR Int'l Co. v. Teleflex, Inc.*, No. 04-1350 (U.S. Aug. 2006) [hereinafter "Brief for the United States"]. This Panglossian view regarding hindsight essentially ignores the history, described above, of the challenges presented when courts are without a clear objective test. As Justice Frankfurter, applying a healthy dose of realism, once observed, the training of judges "ill-fits them to discharge the technological duties cast upon [them] by patent legislation." *Marconi Wireless Tel. Co.*, 320 U.S. at 60-61 (Frankfurter, J., dissenting).

B. Absent the Teaching-Suggestion-Motivation Test, Many Valuable Inventions Would Be Susceptible to Invalidation by Judicial Hindsight, or May Be Found Unpatentable in the First Place

Many useful inventions may appear to be obvious with the improper application of hindsight. As the Court has noted, once an invention "has succeeded, it may seem very plain to any one that he could have done it as well. This is often the case with inventions of the greatest merit." *Washburn & Moen Manuf'g Co. v. Beat'em All Barbed-Wire Co.* (The Barbed Wire Case), 143 U.S. 275, 283 (1892). The Barbed Wire Case provides a good example of such a situation. The Court was faced with a simple invention and acknowledged that the

invention was not radically different from the previous art. *Id.* at 282. However, that minor change "made the barbed-wire fence a practical and commercial success." *Id.* Another example is the invention directed to a horse collar. James V. DeLong, *Mind Over Matter*, REASON (June 1998), *available at* http://reason.com/9806/fe.delong.shtml; *see also* John Langdon, HORSES, OXEN AND TECHNOLOGICAL INNOVATION: THE USE OF DRAUGHT ANIMALS IN ENGLISH FARMING FROM 1066 TO 1500 5-9 (Cambridge University Press 1986). By making a relatively minor change to the harnesses of the day, so that they stopped choking the animals, farming productivity (plowing, harvesting, etc.) was increased fourfold. *Id.* Again, an evaluator looking at the problem from the perspective of the final result might readily conclude that the change was obvious to one skilled in the art; yet the change took many years to occur, which suggests that the change was not at all obvious.

Without the Federal Circuit's teaching-suggestion-motivation test, many inventions that are of considerable value to society may never receive the patent protection their inventors have earned and deserve. History is replete with examples of relatively minor inventions that have gone on to advance, and even to revolutionize, their fields. Absent the protection afforded by the teaching-suggestion-motivation test, an evaluator assessing these inventions could simply have dismissed them as obvious to a person of ordinary skill in the art without citation to even a scintilla of evidence.

C. The Teaching-Suggestion-Motivation Test Allows for Flexibility

Petitioner and its supporting amici contend that the teaching-suggestion-motivation test is rigid and inflexible and thus prevents the exercise of common sense and knowledge in the technology. *See, e.g.*, Brief for the United

States, at 17. To the contrary, the test is only "rigid" to the extent it properly prohibits invalidating patents based on nothing more than an unfounded bias masquerading as "common sense" or intuition. Rather than being rigid or inflexible, the test, when properly applied, allows all relevant information to be evaluated by the courts and the PTO. Indeed, as the Federal Circuit recently described, the teaching-suggestion-motivation test is "quite flexible and not only permits, but *requires*, consideration of common knowledge and common sense." *Dystar Textilfargen GMBH & Co. Deutschland KG v. C.H. Patrick Co.*, No. 06-1088, slip op. at 20 (Fed. Cir. Oct. 3, 2006). Equally important, an explicit statement of teaching, suggestion, or motivation to combine prior art references is not required to establish the obviousness of an invention. *Id.*

The Federal Circuit has repeatedly recognized that a motivation, suggestion, or teaching in the prior art can be found either explicitly or implicitly. *See Alza*, slip op. at 3; *In re Kahn*, 441 F.3d 977, 987 (Fed. Cir. 2006) (quoting *Nat'l Steel Car, Ltd. v. Canadian Pac. Ry., Ltd.*, 357 F.3d 1319, 1337 (Fed. Cir. 2004)); *Cross Med. Prods., Inc. v. Medtronic Sofamor Danek, Inc.*, 424 F.3d 1293, 1322 (Fed. Cir. 2005) ("[T]he motivation to combine need not be found in prior art references, but equally can be found in the knowledge generally available to one of ordinary skill in the art."). Indeed, the Federal Circuit has explained that a motivation to combine references can be found in various sources other than the specific prior art references cited. *Dystar*, slip op. at 7-8 ("The motivation need not be found in the references sought to be combined, but may be found in any number of sources, including common knowledge, the prior art as a whole, or the nature of the problem itself."). *See also In re Napier*, 55 F.3d 610, 613 (Fed. Cir. 1995). Moreover, this notion is not new. The Federal Circuit's predecessor court stated "where it is found necessary, [examiners] may take

notice of facts beyond the record which, while not generally notorious, are capable of such instant and unquestionable demonstration as to defy dispute." *In re Ahlert*, 424 F.2d 1088, 1091 (C.C.P.A. 1970).

The PTO also understands the flexibility of the test, as its Manual of Patent Examining Procedure outlines the permissible guidelines for the application of such knowledge. U.S. Patent & Trademark Office, *Manual of Patent Examining Procedure*, § 2144.03 (8th ed. rev. 3d 2006) ("In limited circumstances, it is appropriate for an examiner to take official notice of facts not in the record or to rely on 'common knowledge' in making a rejection, however such rejections should be judiciously applied."). The PTO may not solely rely on such knowledge, but it may apply the knowledge to support evidence contained in the prior art. *Id.*

Furthermore, the Federal Circuit's recent jurisprudence clearly puts to rest the erroneous charge that under the teaching-suggestion-motivation test, judges or patent examiners will be unable to invalidate obvious inventions. In both *Alza* and *Dystar*, the Federal Circuit found the contested claims to be obvious under the teaching-suggestion-motivation test. *See also* Christopher Anthony Cotropia, *Nonobviousness and the Federal Circuit: An Empirical Analysis of Recent Case Law*, 82 NOTRE DAME L. REV. (forthcoming Feb. 2007), (manuscript at 24-25, *available at* http://papers.ssrn.com/so13/papers.cfm?abstract_id=933192) (finding no support for suggestion that nonobviousness requirement has lowered significantly but, rather, that "if any bias exists, it is a bias towards finding patents obvious, not nonobvious as most critics suggest").

D. The Teaching-Suggestion-Motivation Test Protects Inventors From Arbitrary and Erroneous Decisions by Examiners and the Courts

As many amici in support of Petitioner have noted, the PTO is straining to accommodate the growth in the number of patent application filings.[9] Contrary to the suggestions of Petitioner and its amici, abandonment of the teaching-suggestion-motivation test will do little to remedy this administrative problem. Most of the growth of the PTO's workload has nothing to do with the purported difficulty of invalidating patents on the basis of obviousness.[10] On a percentage basis, the PTO actually rejects many more patents now than it did 40 years ago. Between 1963 and 1965, the PTO received 284,103 applications and granted 166,007 patents, about a 58% grant rate. Between 2003 and 2005, the PTO received 1,165,690 applications and granted 526,034 patents, actually producing a lower grant rate of 45%. *See* U.S. Patent and Trademark Office, U.S. Patent Statistics Chart Calendar Years 1963-2005 (2006), *available at* http://www.uspto.gov/go/taf/us_stat.htm.

Moreover, the Solicitor General advocates:

> The PTO should instead be allowed to bring to bear its full expertise—including its *reckoning* of the basic knowledge and common sense possessed by persons in particular fields of endeavor—when making the predictive judgment whether an invention would have been obvious to a person of ordinary skill in the art. The patent applicant should bear the burden of proving PTO's Board and examiners wrong.

---

9. *See e.g.*, Brief for the United States, at 23 n.1.

10. *See generally* FTC Report, Ch. 1 at 31 (noting sheer number of patents sought and received as challenge posed by growth of knowledge-based economy).

Brief for the United States, at 26 (emphasis added). How exactly an inventor is supposed to disprove a "reckoning" of the PTO or a court is left unexplained. While the Federal Circuit's recent jurisprudence notes that "common knowledge" may support a finding of obviousness, the evaluator must clearly explain any such evidence relied upon. *See Dystar* slip op. at 17. Such reasoned findings by an evaluator are far from the type of essentially unsubstantiated analysis the Solicitor General suggests. Stripped of the certainty and predictability of the Federal Circuit's teaching-suggestion-motivation test, inventors will be subject to the capriciousness of examiners and judges who, if the test is removed, will be susceptible to the irresistible temptation of hindsight analysis.

CONCLUSION

For over forty years, Section 103, coupled with this Court's decision in *Graham*, has provided inventors and patent practitioners with a stable framework for evaluating obviousness. While the Court left largely unresolved the important issue of how to prevent hindsight bias from entering the obviousness analysis, the Federal Circuit has filled this void with the stable framework of the teaching-suggestion-motivation test. This test is flexible and has provided inventors and the patent community with a robust, reliable, and predictable mechanism to protect against the pernicious effects of hindsight.

Respectfully submitted,

ROCHELLE K. SEIDE
Counsel of Record
JOHN K. HSU
ARENT FOX PLLC
1675 Broadway Avenue
New York, NY 10019
(212) 484-3900

MARYLEE JENKINS
President
New York Intellectual Property Law Association
ARENT FOX PLLC
1675 Broadway Avenue
New York, NY 10019
(212) 484-3900

Counsel for Amicus Curiae

850 F

(46)

No. 04-1350

FILED

OCT 16 2006

OFFICE OF THE CLERK
SUPREME COURT, U.S.

IN THE

Supreme Court of the United States

KSR INTERNATIONAL CO.,

Petitioner,

v.

TELEFLEX INC. AND TECHNOLOGY HOLDING CO.,

Respondents.

On Writ of Certiorari to the United States Court of Appeals for the Federal Circuit

BRIEF OF *AMICUS CURIAE* PHARMACEUTICAL RESEARCH AND MANUFACTURERS OF AMERICA IN SUPPORT OF RESPONDENTS

DAVID E. KORN
Of Counsel
PHARMACEUTICAL RESEARCH AND MANUFACTURERS OF AMERICA
950 F Street, NW
Washington, DC 20004
(202) 835-3400

ALLEN M. SOKAL
Counsel of Record
ROBERT A. MATTHEWS, JR.
FINNEGAN, HENDERSON, FARABOW, GARRETT & DUNNER, L.L.P.
901 New York Avenue, NW
Washington, DC 20001-4413
(202) 408-4000

October 16, 2006

QUESTION PRESENTED

Whether the Federal Circuit has erred in holding that a claimed invention cannot be held "obvious," and thus unpatentable under 35 U.S.C. § 103(a), in the absence of some proven "'teaching, suggestion, or motivation' that would have led a person of ordinary skill in the art to combine the relevant prior art teachings in the manner claimed."

TABLE OF CONTENTS

INTEREST OF AMICUS CURIAE 1

SUMMARY OF THE ARGUMENT 3

ARGUMENT 5

I. The "Motivation-Suggestion-Teaching" Test Should Remain a Requirement of an Obviousness Analysis 5

A. By Enacting § 103, Congress Sought to Inject Predictability, Uniformity, and Objectivity into Patentability Analysis 5

B. The "Motivation-Suggestion-Teaching" Test Serves Four Important Purposes in Evaluating the Question of Obviousness Under the Framework of *Graham* 8

C. This Court's Precedents Support the "Motivation-Suggestion-Teaching" Test 12

D. The "Motivation-Suggestion-Teaching" Test Is Workable and Does Not Impose Undue Evidentiary Burdens 15

E. Without the "Motivation-Suggestion-Teaching" Test There Are No Meaningful Guidelines for Objectively Analyzing Obviousness 21

F. Petitioner's Anecdotal Evidence Does Not Show that the "Motivation-Suggestion-Teaching" Test Is a Failed Experiment 22

II. THE STANDARD FOR DETERMINING OBVIOUSNESS SHOULD NOT BE MERE CAPABILITY OF COMBINING TEACHINGS OF REFERENCES 22

III. SYNERGY SHOULD NOT BE THE TEST FOR HOLDING A COMBINATION PATENT VALID 26

A. The Text of § 103 Does Not Support a Synergy Requirement 27

B. A Synergy Requirement Is Contrary to the Legislative Purpose of § 103 28

CONCLUSION 30

TABLE OF AUTHORITIES

FEDERAL CASES

AK Steel Corp. v. Sollac,
344 F.3d 1234 (Fed. Cir. 2003) 11

Abbott Laboratories v. Andrx Pharmaceuticals, Inc.,
452 F.3d 1331 (Fed. Cir. 2006) 16

Adams v. Bellaire Stamping Co.,
141 U.S. 539 (1891) 11

Adamson v. Gilliland,
242 U.S. 350 (1917) 20

Alza Corp. v. Mylan Laboratories, Inc.,
__ F.3d __, 2006 WL 2556356
(Fed. Cir. Sept. 6, 2006) 15, 16, 17

Anderson's-Black Rock, Inc. v. Pavement Salvage Co.,
396 U.S. 57 (1969) 14, 26, 29

Aro Manufacturing Co. v. Convertible Top Replacement Co.,
365 U.S. 336 (1961) 9

Athletic Alternatives, Inc. v. Benetton Trading USA, Inc.,
74 Fed. Appx. 571, 2006 WL 870806
(Fed. Cir. Mar. 31, 2006), *cert. denied*,
2006 U.S. LEXIS 7222 (U.S. Oct. 2, 2006) 19

Atlantic Const. Fabrics, Inc. v. Dandy Prod., Inc.,
64 Fed. Appx. 757, 2003 WL 1949582
(Fed. Cir. Apr. 23, 2003) 19

Avia Group International, Inc. v. L.A. Gear Cal., Inc.,
853 F.2d 1557 (Fed. Cir. 1988) 20

Barbed Wire Patent,
143 U.S. 275 (1892) 25

Barnhart v. Sigmon Coal Co.,
534 U.S. 438 (2002) 27, 28

In re Beattie,
974 F.2d 1309 (Fed. Cir. 1992) 18

Biotec Biologische Naturverpackungen GmbH & Co. KG v. Biocorp, Inc.,
249 F.3d 1341 (Fed. Cir. 2001) 19

Bonito Boats, Inc. v. Thunder Craft Boats, Inc.,
489 U.S. 141 (1989) 6

Bradley v. Richmond School Board,
416 U.S. 696 (1974) 28

Brand Mgt., Inc. v. Menard, Inc.,
135 F.3d 776, 1998 WL 15241
(Fed. Cir. Jan. 14, 1998) 19

C. & A. Potts & Co. v. Creager,
155 U.S. 597 (1895) 5, 24, 25

Cantrell v. Wallick,
117 U.S. 689 (1886) 23

Chiuminatta Concrete Concepts, Inc. v. Cardinal Indus.,
145 F.3d 1303 (Fed. Cir. 1998) 19

Chore-Time Equipment, Inc. v. Cumberland Corp.,
713 F.2d 774 (Fed. Cir. 1983) 19

Colvin v. National Automobile Parts Association,
168 F.3d 1321, 1998 WL 536885
(Fed. Cir. Aug. 18, 1998) 19

Comfort Silkie Co. v. Seifert,
215 F.3d 1344, 1999 WL 507166
(Fed. Cir. July 16, 1999) 19

Connell v. Sears, Roebuck & Co.,
722 F.2d 1542 (Fed. Cir. 1983) 11, 23

Cross Medical Products, Inc. v.
Medtronic Sofamor Danek, Inc.,
424 F.3d 1293 (Fed. Cir. 2005) 17

Crown Operations International, Ltd. v. Solutia, Inc.,
289 F.3d 1367 (Fed. Cir. 2002) 19

Custom Accessories, Inc. v. Jeffrey-Allan Indus.,
807 F.2d 955 (Fed. Cir. 1986) 9

In re Dance,
160 F.3d 1339 (Fed. Cir. 1998) 16

Day v. Fair Haven & Westville Railway Co.,
132 U.S. 98 (1889) 13

Diamond Rubber Co. v.Consolidated Rubber Tire Co.,
220 U.S. 428 (1911) 25

Diamond v. Diehr,
450 U.S. 175 (1981) 28

In re Donaldson Co.,
16 F.3d 1189 (Fed. Cir. 1994) 6

DyStar Textilfarben GmbH & Co. Deutschland KG v. C.H. Patrick Co., __ F.3d __, 2006 WL 2806466 (Fed. Cir. Oct. 3, 2006) 17, 18, 25, 26

Ecolochem, Inc. v. S. Cal. Edison Co., 91 F.3d 169, 1996 WL 297601 (Fed. Cir. June 5, 1996) 19

Expanded Metal Co. v. Bradford, 214 U.S. 366 (1909) 11, 12

Fountain v. Filson, 336 U.S. 681 (1949) 18

Fromson v. Advance Offset Plate, Inc., 755 F.2d 1549 (Fed. Cir. 1985) 23

In re Fulton, 391 F.3d 1195 (Fed. Cir. 2004) 16, 18

Gabrielidis v. Prince Sports Group, Inc., 243 F.3d 565, 2000 WL 1648134 (Fed. Cir. Nov. 1, 2000) 19

Gillette Co. v. S.C. Johnson & Son, Inc., 919 F.2d 720 (Fed. Cir. 1990) 23

Gould v. Rees, 82 U.S. 187 (1872) 23

Graham v. John Deere Co., 383 U.S. 1 (1966) 6, 8, 9, 10, 14, 18, 21

Grain Processing Corp. v. America Maize-Products, Co., 840 F.2d 902 (Fed. Cir. 1988) 9, 10

Graver Tank & Manufacturing Co. v. Linde Air Prod. Co.,
339 U.S. 605 (1950) 27

Great Atlantic & Pacific Tea Co. v. Supermarket Equipment Corp.,
340 U.S. 147 (1950) 28. 29

Hobbs v. Beach,
180 U.S. 383 (1901) 25

Hollister v. Benedict & Burnham Manufocturing Co.,
113 U.S. 59 (1885) 13

Imhaeuser v. Buerk,
101 U.S. 647 (1879) 23

In re Inland Steel Co.,
265 F.3d 1354 (Fed. Cir. 2001) 17

Iron Grip Barbell Co. v. USA Sports, Inc.,
392 F.3d 1317 (Fed. Cir. 2004) 19

In re Johnston,
435 F.3d 1381 (Fed. Cir. 2006) 16

Jungersen v. Ostby & Barton Co.,
335 U.S. 560 (1949) 22

In re Kahn,
441 F.3d 977 (Fed. Cir. 2006) 16, 17

Kegel Co. v. AMF Bowling, Inc.,
127 F.3d 1420 (Fed. Cir. 1997) 19

Leeds & Catlin Co. v. Victor Talking Machine Co.,
213 U.S. 325 (1909), *overruled on other grounds sub nom. Mercoid Corp. v. Mid-Continent Inv. Co.*,
320 U.S. 661 (1944) 9

Loom Co. v. Higgins,
105 U.S. 580 (1881) 25

Mast, Foos & Co. v. Stover Manufacturing Co.,
177 U.S. 485 (1900) 13

Mazzari v. Rogan,
323 F.3d 1000 (Fed. Cir. 2003) 17, 19

McNeil-PPC, Inc. v. L. Perrigo Co.,
337 F.3d 1362 (Fed. Cir. 2003) 20

Mumm v. Jacob Decker & Sons,
301 U.S. 168 (1937) 20

National Steel Car, Ltd. v. Canadian Pacific Railway, Ltd,
357 F.3d 1319 (Fed. Cir. 2004) 17

Norian Corp. v. Stryker Corp.,
363 F.3d 1321 (Fed. Cir. 2004) 16

Novo Nordisk A/S v. Becton Dickinson and Co.,
304 F.3d 1216 (Fed. Cir. 2002) 17

Old Town Canoe Co. v. Confluence Holdings Corp.,
448 F.3d 1309 (Fed. Cir. 2006) 17

Ormco Corp. v. Align Technology, Inc.,
__ F.3d __, 2006 WL 2493245
(Fed. Cir. Aug. 30, 2006) 17

Otto v. Koppers Co.,
246 F.2d 789 (4th Cir. 1957) 20

Pandrol USA, LP v. Airboss Railway Products, Inc.,
424 F.3d 1161 (Fed. Cir. 2005) 11

Panduit Corp. v. Dennison Manufacturing Co.,
810 F.2d 1561 (Fed. Cir. 1987) 12, 23, 25

Park 'N Fly, Inc. v. Dollar Park & Fly, Inc.,
469 U.S. 189 (1985) 28

Parks v. Booth,
102 U.S. 96 (1880) 23

Paulik v. Rizkalla,
760 F.2d 1270 (Fed. Cir. 1985) 6

Permutit Co. v. Graver Corp.,
284 U.S. 52 (1931) 11

Peters v. Active Manufacturing Co.,
129 U.S. 530 (1889) 27

Peters v. Hanson,
129 U.S. 541 (1889) 13

Petersen Manufacturing Co. v. Central Purchasing, Inc.,
740 F.2d 1541 (Fed. Cir. 1984) 19

Princeton Biochemicals, Inc. v. Beckman Coulter, Inc.,
411 F.3d 1332 (Fed. Cir. 2005) 17

Radio Corp. of America v. Radio Engineering Labs., Inc.,
293 U.S. 1 (1934) 20

Richardson-Vicks Inc. v. Upjohn Co.,
122 F.3d 1476 (Fed. Cir. 1997) 20

Rogers v. Desa International Inc.,
No. 02-1247, 2006 WL 1965660
(Fed. Cir. July 13, 2006) 19

Ruiz v. A.B. Chance Co.,
357 F.3d 1270 (Fed. Cir. 2004) 17

Sakraida v. Ag Pro, Inc.,
425 U.S. 273 (1976) 14, 26

Sandt Technology, Ltd. v. Resco Metal & Plastics Corp.,
264 F.3d 1344 (Fed. Cir. 2001) 19

Select Engineered System, Inc. v. Sentex System, Inc.,
194 F.3d 1331, 1999 WL 129637
(Fed. Cir. Mar. 10, 1999) 19

Semmler v. Honda Motor Co.,
178 F.3d 1308, 1998 WL 791718
(Fed. Cir. Nov. 12, 1998) 19

Seymour v. Osborne,
78 U.S. 516 (1870) 23

Shultz v. Moore,
419 U.S. 930 (1974) 11

Smith v. Hall,
301 U.S. 216 (1937) 20

Thomson Spot Welder Co. v. Ford Motor Co.,
265 U.S. 445 (1924) 13, 16,18

Topliff v. Topliff,
145 U.S. 156 (1892) 12

Tucker v. Spalding,
80 U.S. 453 (1871) 11, 13

UV Coatings, Inc. v. Sico, Inc.,
250 F.3d 763, 2000 WL 986965
(Fed. Cir. July 18, 2000) 19

Union Carbide Corp. v. America Can Co.,
724 F.2d 1567 (Fed. Cir. 1984) 19

United States v. Adams,
383 U.S. 39 (1966) 14

Weber Electric Co. v. E.H. Freeman Electric Co.,
256 U.S. 668 (1921) 27

Wood v. Underhill,
46 U.S. 1 (1847) 11

FEDERAL STATUTES

35 U.S.C. § 101 28

35 U.S.C. § 102 6

35 U.S.C. § 103 ..... *passim*

35 U.S.C. § 103(a) 2, 6, 8, 27

35 U.S.C. § 112, ¶1 11

35 U.S.C. § 271(d) 9

35 U.S.C. § 282 20

35 U.S.C. § 301 21

35 U.S.C. §§ 305 & 314(c) 21

OTHER

P.J. Federico, "COMMENTARY ON THE NEW PATENT ACT," 35 U.S.C.A. (1954), *reprinted in* 75 J. PAT. & TRADEMARK OFF. SOC'Y 160 (1993) 6, 7, 8, 27

S. Rep. No. 82-1979 (1952), *reprinted in* 1952 U.S.C.C.A.N. 2394 5

Revision Notes to § 103 of Title 35, 1952 U.S.C.C.A.N. 2403 15

Giles S. Rich, *Laying the Ghost of the Invention Requirement*, 1 APLA Q.J. 26 (1972), *reprinted in* 14 Fed. Cir. B.J. 163 (2004) 4, 5, 6, 28, 30

Howard T. Markey, J., *Why Not the Statute*, 65 J. Pat. Off. Soc'y 331 (1983) 23

P.J. Federico, *Origins of Section 103*, 5 APLA Q.J. 87 (1977) 29

John Milton, *Paradise Lost*, Part VI 23

American Intellectual Property Law Association (AIPLA), "Guide to Model Patent Jury Instructions," Feb. 2006 (available at http://www.aipla.org/Content/ContentGroups/Publications1/Publications_available_for_viewing1/MPJ_021006.pdf) 11

INTEREST OF AMICUS CURIAE[1]

The Pharmaceutical Research and Manufacturers of America ("PhRMA") is a voluntary, nonprofit association representing the nation's leading research-based pharmaceutical and biotechnology companies. Member companies are in the business of developing new drugs—a complex process involving huge expenditures of time and money. In 2005 alone, PhRMA members invested an estimated $39.4 billion toward the discovery and development of new medicines. Collectively, PhRMA members are responsible for a huge portion of the innovative medicines approved for use in the United States in the past several decades.

Pharmaceutical companies spend many years working to develop each new drug that appears on the market, as well as many that will never earn approval. The process typically begins with creating a new compound or screening hundreds of thousands of existing compounds. The most promising compounds are then modified to optimize their properties, thus producing a candidate drug. At that point, both compounds and their potential uses are often separately patented. Selected compounds are then tested in the lab and in animals to determine whether they might effectively and safely treat a disease. That is followed by clinical trials in normal human volunteers and a series of studies in a relatively small number of patients. The next stage of development is a series of large clinical trials testing the effectiveness as well as the safety of a drug in patients. Those clinical trials, which typically take six to eight years, precede the

---

[1] Counsel for both parties have consented to the filing of this brief, and the parties' letters of consent have been filed with the Clerk of Court. No counsel for any party authored this brief in whole or in part, and no person or entity, other than *PhRMA* or its members, contributed monetarily to the preparation or submission of this brief. A complete listing of PhRMA's members is available online at http://www.phrma.org/member_company_list/.

process of seeking approval from the Food and Drug Administration ("FDA"). Altogether, the entire drug development process might last upwards of fifteen years.

Moreover, a critical part of the research process is discovering how to deliver a drug substance to a patient in a safe and effective manner. That often involves creating appropriate dosage forms for delivery of the drug to a particular part of the body with certain specifications. Those dosage forms can be optimized with particular ingredients or coatings, and can involve combinations of ingredients or technologies designed to provide particular benefit to patients, exactly the kinds of innovations that could be affected by the outcome of this case. Such innovations can be significant for patient health.

Given the time and expense necessary to develop new drugs, intellectual property principles, especially those involving patent rights, are critical to PhRMA members and their research and development efforts. PhRMA has a strong interest in seeing the law continue to protect those patent rights essential to ensuring future innovation and the timely development of new medicines. As practitioners in an industry where research and development are expensive and competition is fierce, PhRMA's members need strong patent protection to be able to recoup the costs of their investments.

PhRMA submits that to show that a combination of prior art references renders a claimed invention obvious, within the meaning of 35 U.S.C. § 103(a), a challenger should have to provide evidence of either an express or an implicit motivation, suggestion, or teaching to combine the teachings of the references in the manner alleged to render the claimed invention as a whole obvious. Rejecting the requirement that the prior art show a motivation, suggestion, or teaching before finding a patent claim invalid under § 103 will make validity challenges unpredictable. The focus will shift from an objective analysis of what the prior art teaches to a person having ordinary skill in the art to a subjective analysis by the judicial officer considering the patent of

whether the claimed invention has sufficient merit to warrant a patent. Such an undesirable change in the law will significantly undermine the confidence of innovators such as PhRMA members in their ability to enforce patents against free-riding infringers who use the fruits of research and clinical-testing efforts of PhRMA members without incurring the costly expenses associated with developing, testing, and obtaining approval of new drug products. Hence, PhRMA members have a strong interest in preserving an obviousness standard that promotes predictability and uniformity in the obviousness analysis, to preserve the patent system as a strong economic driving force for highly beneficial, yet expensive, research and development efforts.

SUMMARY OF THE ARGUMENT

Through change in analytical perspective resulting from the enactment of § 103, patentability analysis now requires *objective* evidence that one of skill in the art would readily deduce a claimed combination from the prior art. Subjective assessment by the judiciary of whether the claimed subject matter meets the indefinable definition of "invention" has been repealed. It should not be effectively resurrected by permitting subjective conclusions or conclusory allegations of how one skilled in the art would use the prior art to govern an obviousness analysis concerning a claimed combination. Rather, the law should continue to demand that objective *evidence* be used in the analysis to show that, before the applicant's invention, one of ordinary skill in the art would have recognized that the prior art teachings could be combined as claimed in the patent. A lesser standard would lose sight of the congressional directive to consider the invention "as a whole." The evidence can be direct or circumstantial, i.e., an express or implicit motivation to combine the prior art teachings, but there must be evidence. That is what the "motivation-suggestion-teaching" ("MST") test does. It requires evidence to

support the contention that where all the components of a claimed invention are found individually in the prior art, one of skill in the art would find the claimed *combination*, when viewed "*as a whole*," obvious. There is no good reason to reject that test in favor of an unspecified standard that focuses the analysis on the differences between *individual* components of the claimed combination without demanding any objective evidence to ascertain whether the *combination* when considered as a whole would have been obvious as the statute explicitly requires. As Judge Rich explained, "*what* must have been obvious is '*the subject matter as a whole*.' . . . If, for example, a *combination* is claimed, Section 103 requires that to invalidate the claim, it must be shown that the *combination* was obvious, not merely its components." Giles S. Rich, *Laying the Ghost of the Invention Requirement*, 1 APLA Q.J. 26, 34 (1972), *reprinted in* 14 Fed. Cir. B.J. 163, 70 (2004) [*hereinafter* "Ghost"]. Rejecting the MST test will reintroduce subjectivity, hindsight, and uncertainty into patentability analysis, defeating the whole patent system and casting a cloud over many meritorious combination patents.

The arguments by the petitioner and its supporting amici—that the MST test requires an express teaching, precludes summary judgment, has no basis in this Court's precedents, and ill serves the patent law—do not withstand scrutiny. To the contrary, the test permits a wide variety of evidence, including implicit teachings and expert testimony, permits summary judgment when circumstances warrant, has support in this Court's pre- and post-§ 103 enactment precedents, and has beneficially served the patent law and advanced technology. Petitioner's contention that the Court should reject the MST test in favor of a standard that merely requires technical capability to combine the teachings of the prior art should not be adopted. It sets the bar too low, for it ignores the principle that a patentable invention can come from merely recognizing that a never-before-made combination can be made even if the combination is

simple—a principle this Court has long recognized and upheld. Neither should petitioner's suggestion that the Court resurrect a "synergy" requirement be adopted, since Congress overruled such a requirement with the enactment of § 103.

ARGUMENT

I. The "Motivation-Suggestion-Teaching" Test Should Remain a Requirement of an Obviousness Analysis

A. By Enacting § 103, Congress Sought to Inject Predictability, Uniformity, and Objectivity into Patentability Analysis

Determining whether a claimed invention comprised of components found in the prior art is patentable presents a question that "has taxed the ingenuity of courts ever since the passage of the patent acts." *C. & A. Potts & Co. v. Creager*, 155 U.S. 597, 606 (1895). To answer that question before the enactment of the 1952 Patent Act, courts examined the claimed subject matter to see whether it showed "invention" or the mere work of an ordinary mechanic. Focusing the analysis on whether the claimed subject matter showed sufficient "invention" proved unsatisfactory, as the answer often turned on the subjective views of the judicial officer considering the patent. That in turn led to inconsistency and unpredictability concerning whether a patent would be upheld or found invalid for lack of invention. *See* Rich, *Ghost*, 1 APLA Q.J.at 28-31, *reprinted in* 14 Fed. Cir. B.J. at 165-70.

To eliminate the subjectivity of the analysis and provide for uniformity in the application of the law, Congress enacted § 103 of the 1952 Patent Act.[2] Section 103 changed the focus of the analysis from whether the

---

[2] S. Rep. No. 82-1979, at 6 (1952), *reprinted in* 1952 U.S.C.C.A.N. 2394, 2400.

claimed subject matter showed a sufficient level of "invention" to whether the "differences between the subject matter sought to be patented and the prior art are such that the subject matter *as a whole* would have been *obvious* at the time the invention was made *to a person having ordinary skill in the art* to which said subject matter pertains." 35 U.S.C. § 103(a) (emphasis added). *Graham v. John Deere Co.*, 383 U.S. 1, 14 (1966). In other words, instead of judging whether the subject matter claimed in the patent rose to the dignity of "invention," a concept difficult to define, the analysis focuses on whether the claimed subject matter, when viewed as a whole, would have been "obvious" from the prior art to a person having ordinary skill in the art. *See Bonito Boats, Inc. v. Thunder Craft Boats, Inc.*, 489 U.S. 141, 150 (1989) ("The nonobviousness requirement extends the field of unpatentable material beyond that which is known to the public under § 102, to include that which could readily be deduced from publicly available material by a person of ordinary skill in the pertinent field of endeavor.").

The late Judge Giles S. Rich, a principal drafter of § 103, instructed that the section was a legislative directive for a new approach to considering patentability. Rich, *Ghost*, 1 APLA Q.J. at 34, *reprinted in* 14 Fed. Cir. B.J. at 170 ("As compared to finding or not finding "invention," Section 103 was a whole new way of thinking and a clear *directive* to the courts to think that way. Some courts and some lawyers do not yet seem to realize that.").

Mr. P.J. Federico,[3] the other principal drafter of § 103,

---

[3] Mr. Federico has been identified as the "primary author of the Patent Act of 1952" 75 J. PAT. & TRADEMARK OFF. SOC'Y 160, 160 (1993). *See also Paulik v. Rizkalla*, 760 F.2d 1270, 1277 (Fed. Cir. 1985) (Rich, J., *concurring*). Hence, although not definitive evidence of Congress's intent, *see In re Donaldson Co.*, 16 F.3d 1189, 1193 n.3 (Fed. Cir. 1994) (en banc) (Rich, J), his commentary provides useful

noted in his famous commentary that the drafters carefully chose the language of § 103 as a means of eliminating overly strict standards of patentability, laying the groundwork for an "attitude more favorable to patents," and stabilizing the law regarding patentability. According to Mr. Federico:

> There has been some discussion as to whether section 103 modifies the so-called standard of invention (which itself is an unmeasurable quantity having different meanings for different persons) in the courts and it may be correct to state that the printed record does not show an explicit positive command to the courts. While it is not believed that Congress intended any radical change in the level of invention or patentable novelty, nevertheless, it is believed that *some modification was intended in the direction of moderating the extreme degrees of strictness exhibited by a number of judicial opinions* over the past dozen or more years; that is, that some change of attitude *more favorable to patents was hoped for.* This *is indicated by the language used in section 103* as well as by the general tenor of remarks of Committees in the reports and particular comments. *Weight should be given to the terms used in the section* since a variety of expressions used in decisions were available, including some stated with an extreme degree of strictness, which could have been used as the model for the phraseology to be adopted, but the language selected was of the more moderate variety. The Committee Report, in the general part, states that the section "should have a stabilizing effect and minimize great departures

---

information in understanding the policies the drafters sought to advance with the 1952 Act.

> which have appeared in some cases"; the departures of which complaint has been made in the recent past are all departures in the direction of greater strictness and hence these would be what the report indicates should be minimized.

P.J. FEDERICO, "COMMENTARY ON THE NEW PATENT ACT," 35 U.S.C.A. at pp. 22-23 (1954), *reprinted in* 75 J. PAT. & TRADEMARK OFF. SOC'Y 160, 183-84 (1993) (emphasis added). Mr. Federico also noted that after its enactment there were concerns that "new section 103 may not have the influence on the courts which was anticipated by its enactment." *Id.* at 23, *reprinted in* 75 J. Pat. & Trademark Soc'y at 184. That concern seems justified by the current positions urged by the petitioner and the amici supporting the petitioner.

B. The "Motivation-Suggestion-Teaching" Test Serves Four Important Purposes in Evaluating the Question of Obviousness Under the Framework of *Graham*

Section 103 of the Patent Act dictates that the main inquiry in considering the possible obviousness of a claimed invention is whether "the *differences* between the subject matter sought to be patented and the prior art are such that the subject matter *as a whole* would have been obvious at the time the invention was made to a person having ordinary skill in the art to which said subject matter pertains." 35 U.S.C. § 103(a) (emphasis added). As guidance for conducting that analysis, this Court, in *Graham*, set forth the now familiar legal principle that

> Under § 103, the scope and content of the prior art are to be determined; differences between the prior art and the claims at issue are to be ascertained; and the level of ordinary skill in the pertinent art resolved. Against this background, the obviousness or nonobviousness of the subject matter is determined.

Graham, 383 U.S. at 17-18. While providing a starting point, the *Graham* instruction fails to provide explicit guidance on how one should apply the distinct evidentiary factors (a/k/a "the *Graham* factors") in determining obviousness. The MST standard provides an analytical framework, and perhaps the only possible analytical framework, for applying the *Graham* factors.

At least four important purposes in assessing the *Graham* factors are served by the MST test. First, by requiring evidence that one of skill in the art would have a motivation to combine the teachings of the prior art in a manner that yields the claimed invention, the standard ensures that the obviousness analysis gives due credence to the statutory requirement that the claimed invention be viewed "as a whole." Permitting the analysis to be based on the mere presence in various items of prior art of the elements of a claimed invention without requiring any showing that one of skill in the art would have been motivated to combine the teachings of those items of prior art risks transforming the analysis into a consideration of only the individual elements. But the statute demands that the invention be considered "as a whole."[4] Indeed, how can it accurately be proven that a claimed combination "as a whole" would have been obvious to a person having ordinary skill in the art without a showing that something would have taught, suggested, or

---

[4] *Custom Accessories, Inc. v. Jeffrey-Allan Indus.*, 807 F.2d 955, 959 (Fed. Cir. 1986); *see also Grain Processing Corp. v. Am. Maize-Prods., Co.*, 840 F.2d 902, 907-08 (Fed. Cir. 1988). *Cf. Aro Mfg. Co. v. Convertible Top Replacement Co.*, 365 U.S. 336, 344-45 (1961) ("the combination patent covers only the totality of the elements in the claim"); *Leeds & Catlin Co. v. Victor Talking Machine Co.*, 213 U.S. 325, 333 (1909) ("A combination is a composition of elements, some of which may be old and others new, or all old or all new. It is, however, the combination that is the invention, and is as much a unit in contemplation of law as a single or noncomposite instrument."), *overruled on other grounds sub nom. Mercoid Corp. v. Mid-Continent Inv. Co.*, 320 U.S. 661 (1944), *superceded by statute* 35 U.S.C. § 271(d).

motivated that person to combine the teachings of the prior art in a manner to make the claimed combination?

Second, evidence of whether or not one of skill in the art would have had a motivation to combine the teachings of the prior art provides a way to evaluate the significance of the differences between the prior art and the claimed invention. Differences that may seem insignificant but would not have occurred to one of skill in the art likely deserve patent protection. Significant differences may not deserve patent protection if they would easily occur to one of skill in the art. Evidence showing the presence or absence of a motivation to combine the teachings of the prior art provides guidance for evaluating whether the differences between the claimed invention and prior art show that the invention would or would not have been obvious.

Third, requiring evidence that one of skill would be motivated to combine the teachings of the prior art to arrive at the claimed invention ensures that the fact-finder bases the obviousness determination on objective evidence of how one of skill in the art could view and use the prior art. Without that standard, fact-finders will rely on their own subjective perceptions of how one of skill in the art could use the prior art teachings. Reliance on subjective perceptions, rather than objective evidence, will lead to uncertainty in obviousness determinations, which in turn will create instability in the law.

Fourth, the MST test also serves "to guard against slipping into use of hindsight and to resist the temptation to read into the prior art the teachings of the invention in issue." *Graham*, 383 U.S. at 36.[5] Although the petitioner and several amici try to downplay the importance of

---

[5] *See also Grain Processing Corp.*, 840 F.2d at 907 ("Care must be taken to avoid hindsight reconstruction by using 'the patent in suit as a guide through the maze of prior art references, combining the right references in the right way so as to achieve the result of the claims in suit.'").

guarding against hindsight, the need for that protection is especially important when a jury will determine the issue of obviousness.[6] Jurors on patent cases must often deal with new and complex technology that they have never encountered before. Over the course of a trial, which generally will last for at least several days, they are presented with testimony regarding the patent, the story of how the inventor created the invention, testimony on the prior art, a host of instructions on patent-law principles[7] and claim constructions to apply to the facts, demonstrative exhibits, usually conflicting testimony of highly qualified expert witnesses, and more. Given the overload of information, it is not realistic to expect a lay juror when determining the issue of obviousness to ignore the teachings of the patent specification when he or she must look to those teachings to understand and evaluate the invention for other purposes.[8] Requiring proof of a motivation to combine the teachings of the prior art to

---

[6] Although obviousness presents a question of law, it is an issue typically given to the jury. *Adams v. Bellaire Stamping Co.*, 141 U.S. 539, 542 (1891); *Tucker v. Spalding*, 80 U.S. 453, 455 (1871); *Connell v. Sears, Roebuck & Co.*, 722 F.2d 1542, 1547 (Fed. Cir. 1983); *but see Shultz v. Moore*, 419 U.S. 930, 931-32 (1974) (Douglas, J., dissenting) (contending that validity questions should not go to a jury).

[7] *See, e.g.*, American Intellectual Property Law Association (AIPLA), "GUIDE TO MODEL PATENT JURY INSTRUCTIONS," Feb. 2006 (available at http://www.aipla.org/ Content/ ContentGroups/ Publications1/Publications_available_for_viewing1/ MPJ_021006.pdf) (providing 37 pages, in single-spaced type, of model jury instructions for use in a typical patent infringement case).

[8] For example, if a challenger to the patent asserts that the patent fails to enable a person of ordinary skill in the art to practice the invention or fails to provide an adequate written description of the claimed invention (both defenses arising under 35 U.S.C. § 112, para. 1), the juror must specifically consider the teachings of the patent specification. *See Permutit Co. v. Graver Corp.*, 284 U.S. 52, 59-60 (1931); *Expanded Metal Co. v. Bradford*, 214 U.S. 366, 380-81 (1909); *Wood v. Underhill*, 46 U.S.. 1, 4-5 (1847); *Pandrol USA, LP v. Airboss Ry. Prods., Inc.*, 424 F.3d 1161, 1165 (Fed. Cir. 2005); *AK Steel Corp. v. Sollac*, 344 F.3d 1234, 1244 (Fed. Cir. 2003).

arrive at the claimed invention helps to ensure that the jury does not impermissibly use the inventor's teachings in determining the obviousness or unobviousness of a claimed invention.

By achieving those four purposes, the MST standard realizes the congressional intent of stabilizing the patent law. The test provides an analytical framework that can be uniformly applied to all patent disputes. Furthermore, since it focuses on objective evidence of how one of skill in the art can use the teachings of the prior art, it avoids the unfairness and uncertainty of determinations based on subjective perceptions of the lay fact-finder. It also prevents the lay fact-finder from injecting into the obviousness analysis his or her perception of the worth of the patent.[9] And most importantly, it requires that the fact-finder consider only objective evidence, direct or circumstantial, of how one of skill could use the prior art teachings.

C. This Court's Precedents Support the "Motivation-Suggestion-Teaching" Test

The MST test has roots in the precedents of this Court. In determining patentability before the passage of the 1952 Patent Act, this Court often considered whether the prior art "suggested" the modification that yielded the claimed invention. For example, in *Topliff v. Topliff*, 145 U.S. 156, 161 (1892), the Court refused to find that a prior art patent, via a modification to its teachings, could invalidate an asserted patent where there was not "anything in [the prior art] patent which would have suggested [the modification] to a mechanic of ordinary intelligence, unless he were examining it for that purpose." The Court upheld the validity of a claim directed to an improved process for making expanded

---

[9] Worth of patent is not, and should not be, the test for obviousness. *Panduit Corp. v. Dennison Mfg. Co.*, 810 F.2d 1561, 1573 (Fed. Cir. 1987).

sheet metal in *Expanded Metal Co. v. Bradford*, 214 U.S. 366, 381 (1909), because "the prior art does not suggest the combination of operations which is the merit of Golding's invention." In *Thomson Spot Welder Co. v. Ford Motor Co.*, 265 U.S. 445, 451, 453-54 (1924), the Court found "no error in law" in a lower court's analysis holding claims to a spot-welding process invalid for lack of invention where all the individual elements were known in the prior art and the combination was "naturally enough suggested by the prior art." Other case examples from the Court show that the notion that something other than the challenged patent must explicitly or implicitly suggest the claimed combination to a mechanic of ordinary skill has firmly been part of the patent law for well over a hundred twenty-five years.[10] Contrary to the contention of the petitioner and its supporting amici, the foregoing shows that this Court in the past has required the finding of an explicit or implicit suggestion in the prior art to combine the teachings of the prior art to yield the claimed combination before invalidating a combination claim.

---

[10] *E.g.*, *Mast, Foos & Co. v. Stover Mfg. Co.*, 177 U.S. 485, 493-94 (1900) (claim to windmill gearing was held invalid because, in view of the state of the prior art, the claimed combination "would have been suggested to an intelligent mechanic, who had before him the patents to which we have called attention."); *Day v. Fair Haven & Westville Ry. Co.*, 132 U.S. 98, 102 (1889) (claim invalid where invention "would naturally suggest itself to any mechanic, and its use in that way is within the range of common knowledge and experience"); *Hollister v. Benedict & Burnham Mfg. Co.*, 113 U.S. 59, 72 (1885) (claim to a stamp device invalid since it was "the suggestion of that common experience, which arose spontaneously and by a necessity of human reasoning, in the minds of those who had become acquainted with the circumstances with which they had to deal"); *Tucker*, 80 U.S. at 455-56 (prior art reference should have been admitted if it "suggested to the mind of an ordinarily skilful mechanic" the claimed invention); *see also Peters v. Hanson*, 129 U.S. 541, 552-53 (1889) (noting expert testimony that an ordinary mechanic would be motivated to apply prior art teaching of using slots to provide adjustable attachments to invalidate claim).

This Court's § 103 precedents considering the validity of a claim in view of the combined teachings of prior art references show a continuing of the requirement that a challenger present evidence of an explicit or implicit motivation for one of skill in the art to combine those teachings in a manner that yields the claimed invention. For example, in *United States v. Adams*, 383 U.S. 39 (1966), the Court held the invention unobvious, in part, because the prior art "deter[red] any investigation into such a combination as is used by Adams." *Id.* at 52. In other words, the Court sustained validity because the prior art failed to show a motivation to combine the prior art teachings in a manner that yielded the claimed invention.

In *Calmar, Inc. v. Cook Chemical Co.*, the companion case to *Graham*, this Court effectively found an implicit motivation to combine teachings of prior art references where the references were directed to solving the same type of mechanical closure problem. 383 U.S. at 35. Similarly, *Anderson's-Black Rock, Inc. v. Pavement Salvage Co.*, 396 U.S. 57 (1969), shows another situation where the nature of the problem to be solved—in that case, preventing the formation of cold joints in paving operations—implicitly provided the necessary motivation to combine a radiant heat burner, known to be useful in eliminating cold joints, with a paving apparatus to yield the claimed invention.

Sakraida v. Ag Pro, Inc., 425 U.S. 273 (1976), provides an example where all the elements of the claimed combination were found in several prior art references directed to the same narrow field of the invention—systems using flowing water to clean animal wastes from barn floors. Hence, the narrow field of the invention provided the implicit motivation to combine the teachings of the references in a manner that yielded the claimed invention.

As shown in Section I(D), *infra*, all of those factors—the presence or absence of a suggestion in the prior art, nature of the problem to be solved, and narrow field of the invention—are factors the Federal Circuit considers as evidence that can be used to show a motivation for combining the teachings of the prior art.

D. The "Motivation-Suggestion-Teaching" Test Is Workable and Does Not Impose Undue Evidentiary Burdens

When Congress enacted § 103, it realized that additional criteria beyond the main standard in the statute would likely be needed to achieve the goal of providing a patentability analysis based on objective evidence and achieving greater uniformity in its conclusions.[11] The MST test is one of those "worked out" criteria.

In essence, the test requires merely that a conclusion of obviousness be based on objective *evidence*, and not a subjective judgment or conclusory assertions. The Federal Circuit made that clear in *Alza Corp. v. Mylan Laboratories, Inc.*, __ F.3d __, No. 06-1019, 2006 WL 2556356 (Fed. Cir. Sept. 6, 2006), where it explained:

> At its core, our anti-hindsight jurisprudence is a test that rests on the unremarkable premise that legal determinations of obviousness, as with such determinations generally, should be based on evidence rather than on mere speculation or conjecture. . . .
>
> . . . [R]ejections on obviousness grounds cannot be sustained by mere conclusory statements; instead, there must be *some* articulated reasoning with

---

[11] Revision Notes to § 103 of Title 35, 1952 U.S.C.C.A.N. 2403, 2411 ("This paragraph [§ 103] is added with the view that an explicit statement in the statute may have some stabilizing effect, and also to serve as a basis *for the addition at a later time of some criteria which may be worked out*.") (emphasis added).)

> *some* rational underpinning to support the legal conclusion of obviousness. This requirement is as much rooted in the Administrative Procedure Act [for our review of Board determinations], which ensures due process and non-arbitrary decisionmaking, as it is in § 103.

Alza Corp., slip op. at 5-6, __ F.3d at __, 2006 WL 2556356, at *3-*4 (quoting *In re Kahn*, 441 F.3d 977, 989-90 (Fed. Cir. 2006)) (citations omitted).

This Court itself has noted that conclusory analysis and assertions are not sufficient for a patentability analysis. *Thomson Spot Welder*, 265 U.S. at 453 (rejecting invalidity analysis by one court that contained "only general allusions to the prior art and no analysis of the prior patents" while accepting invalidity analysis of a second court supported by factual findings).

The United States Patent and Trademark Office ("PTO") and those challenging the validity of a patent in court have a wide variety of *evidence* they can use to show that the prior art would motivate one of ordinary skill in the art to combine aspects of the prior art in a way that may render a claimed invention obvious. At one end of the spectrum, evidence that the prior art expressly discloses that the combination can be made will meet the standard.[12] At the other end of the spectrum, an implicit motivation to combine can also suffice.[13] Under Federal Circuit precedent, an implicit motivation to combine can be found where the prior art references are in the same

---

[12] *E.g., In re Fulton*, 391 F.3d 1195, 1201 (Fed. Cir. 2004); *Norian Corp. v. Stryker Corp.*, 363 F.3d 1321, 1328 (Fed. Cir. 2004).

[13] *Alza Corp., slip op.* at 6, __ F.3d at __, 2006 WL 2556356, *4 ("There is flexibility in our obviousness jurisprudence because a motivation may be found *implicitly* in the prior art. We do not have a rigid test that requires an actual teaching to combine before concluding that one of ordinary skill in the art would know to combine references."); *e.g., Abbott Labs. v. Andrx Pharms., Inc.*, 452 F.3d 1331, 1341 (Fed. Cir. 2006) (implicit disclosure of interchangeability provided motivation).

field of invention.[14] The nature of the problem solved may also provide evidence of an implicit motivation where the prior art references address the same problem.[15] Nonconclusory expert testimony may also show that one of skill in the art would have been motivated to make the claimed combination.[16] Contrary to the contention of the petitioner and several amici, inherent knowledge of one of skill in the art (where that knowledge is articulated and placed in the record) can show the necessary motivation.[17] In fact, evidence used to show the motivation to combine does not even have to be publicly available.[18]

---

[14] *E.g.*, *In re Johnston*, 435 F.3d 1381, 1384-85 (Fed. Cir. 2006); *In re Dance*, 160 F.3d 1339, 1343 (Fed. Cir. 1998).

[15] *E.g.*, *Old Town Canoe Co. v. Confluence Holdings Corp.*, 448 F.3d 1309, 1319 (Fed. Cir. 2006); *Cross Med. Prods., Inc. v. Medtronic Sofamor Danek, Inc.*, 424 F.3d 1293, 1322-23 (Fed. Cir. 2005); *Princeton Biochemicals, Inc. v. Beckman Coulter, Inc.*, 411 F.3d 1332, 1339 (Fed. Cir. 2005); *Ruiz v. A.B. Chance Co.*, 357 F.3d 1270, 1276-77 (Fed. Cir. 2004); *In re Inland Steel Co.*, 265 F.3d 1354, 1362 (Fed. Cir. 2001).

[16] *E.g.*, *Alza Corp.*, *slip op.* at 11-15, __ F.3d at __, 2006 WL 2556356, *6-*8; *Princeton Biochemicals, Inc.*, 411 F.3d at 1337-40; *Mazzari v. Rogan*, 323 F.3d 1000, 1005 (Fed. Cir. 2003).

[17] *DyStar Textilfarben GmbH & Co. Deutschland KG v. C.H. Patrick Co.*, *slip op.* at 20, __ F.3d __, __, No. 06-1088, 2006 WL 2806466, *11 (Fed. Cir. Oct. 3, 2006) ("Our suggestion test is in actuality quite flexible and not only permits, but *requires*, consideration of common knowledge and common sense."). *E.g.*, *Ormco Corp. v. Align Technology, Inc.*, *slip op.* at 16, __ F.3d __, __, No. 05-1426, 2006 WL 2493245, *7 (Fed. Cir. Aug. 30, 2006) (relying on "well-known practice of packaging items in the manner most convenient to the purchaser"); *Novo Nordisk A/S v. Becton Dickinson and Co.*, 304 F.3d 1216, 1219 (Fed. Cir. 2002); *see also In re Kahn*, 441 F.3d at 989-90.

[18] *Alza Corp.*, *slip op.* at 12, __ F.3d at __, 2006 WL 2556356, *7; *e.g.*, *Cross Med. Prods.*, 424 F.3d at 1322-23 (non-prior art material showed recognition of the problem to supply necessary motivation to combine or modify prior art teachings); *Nat'l Steel Car, Ltd. v. Canadian Pac. Ry., Ltd*, 357 F.3d 1319, 1337-39 (Fed. Cir. 2004) (motivation found from *unpublished* drawing made by an engineer and a private disclosure of a marketing employee to members of an engineering staff).

Additionally, under the Federal Circuit's precedents, evidence of a motivation to combine does not have to match the reasons contemplated by the inventor.[19] Given the wide variety of evidence, direct or circumstantial, that can be used to show a motivation, suggestion, or teaching to combine teachings of prior art references, the MST test does not place an undue burden on challengers or the PTO to substantiate a claim of obviousness with some form of objective evidence.[20]

Petitioner and several of the amici contend that the MST test virtually precludes summary judgment. That contention does not withstand scrutiny. The obviousness inquiry requires resolution of "factual inquires" before arriving at the ultimate legal conclusion on obviousness. *Graham*, 383 U.S. at 17. *But cf. Thomson Spot Welder*, 265 U.S. at 446 ("The question whether an improvement requires mere mechanical skill or the exercise of the faculty of invention, is one of fact."). Hence, where genuine issues of material fact exist regarding whether some form of objective evidence shows a motivation to combine teachings of references, it comes as no surprise that a district court may not grant summary judgment. *Fountain v. Filson*, 336 U.S. 681, 682-83 (1949). But

---

[19] *E.g.*, *In re Fulton*, 391 F.3d at 1202; *In re Beattie*, 974 F.2d 1309, 1312 (Fed. Cir. 1992).

[20] The breadth of evidence that can be used to show an explicit or *implicit* motivation to combine teachings of the prior art refutes the characterization by some of the amici that the MST standard is nothing more than a "generalized novelty requirement." *See DyStar*, *slip op.* at 15-23, __ F.3d at __, 2006 WL 2806466, at *8-*12 (stating that commentators have distorted the "motivation-suggestion-teaching" test and illustrating cases showing the broad flexibility inherent in the test). The MST test also permits giving effect to the "ability to combine and modify prior art references that is consistent with the creativity and problem-solving skills that in fact are characteristics of those having ordinary skill in the art" as urged by other amici. *See id.*, *slip op.* at 26, 2006 WL 2806466, at *13. What the test does not permit, however, is conclusory assertions of a motivation to combine prior art teachings.

where the circumstances show no genuine issue of material fact on the question of obviousness, including whether a motivation exists to combine or modify prior art teachings, the Federal Circuit has affirmed invalidity rulings under § 103 on summary judgment.[21] Where proper the Federal Circuit has also affirmed summary judgments dismissing obviousness challenges.[22]

---

[21] *E.g.*, *Rogers v. Desa Int'l Inc.*, No. 02-1247, 2006 WL 1965660 (Fed. Cir. July 13, 2006) (*nonprecedential*); *Athletic Alternatives, Inc. v. Benetton Trading USA, Inc.*, 74 Fed. Appx. 571, 574, No. 05-1378, 2006 WL 870806, *3 (Fed. Cir. Mar. 31, 2006) (*nonprecedential*), *cert. denied*, 2006 U.S. LEXIS 7222 (U.S. Oct. 2, 2006)); *Iron Grip Barbell Co. v. USA Sports, Inc.*, 392 F.3d 1317, 1325 (Fed. Cir. 2004); *Mazzari*, 323 F.3d at 1005 (affirming summary judgment for PTO in a § 145 action); *Atl. Const. Fabrics, Inc. v. Dandy Prod., Inc.*, 64 Fed. Appx. 757, 762, No. 02-1451, 2003 WL 1949582, *4 (Fed. Cir. Apr. 23, 2003) (*nonprecedential*); *Sandt Tech., Ltd. v. Resco Metal & Plastics Corp.*, 264 F.3d 1344, 1355 (Fed. Cir. 2001); *Gabrielidis v. Prince Sports Group, Inc.*, 243 F.3d 565, No. 99-1469, 99-1490, 2000 WL 1648134, *8-*11 (Fed. Cir. Nov. 1, 2000) (*nonprecedential*); *UV Coatings, Inc. v. Sico, Inc.*, 250 F.3d 763, No. 99-1336, 2000 WL 986965, *4-*5 (Fed. Cir. July 18, 2000) (*nonprecedential*); *Comfort Silkie Co. v. Seifert*, 215 F.3d 1344, No. 98-1476, 1999 WL 507166, *2 (Fed. Cir. July 16, 1999) (*nonprecedential*); *Select Engineered Sys., Inc. v. Sentex Sys., Inc.*, 194 F.3d 1331, No. 98-1166, 1999 WL 129637, *1 (Fed. Cir. Mar. 10, 1999) (*nonprecedential*); *Semmler v. Honda Motor Co.* 178 F.3d 1308, No. 97-1390, 1998 WL 791718, *4-*5 (Fed. Cir. Nov. 12, 1998) (*nonprecedential*); *Colvin v. Nat'l Auto. Parts Ass'n*, 168 F.3d 1321, No., 98-1104, 1998 WL 536885, *1 (Fed. Cir. Aug. 18, 1998) (*nonprecedential*); *Brand Mgt., Inc. v. Menard, Inc.*, 135 F.3d 776, No. 97-1329, 1998 WL 15241, *11 (Fed. Cir. Jan. 14, 1998) (*nonprecedential*); *Ecolochem, Inc. v. S. Cal. Edison Co.*, 91 F.3d 169, No. 95-1320, 1996 WL 297601, *3-*4 (Fed. Cir. June 5, 1996) (*nonprecedential*); *Petersen Mfg. Co. v. Cent. Purchasing, Inc.*, 740 F.2d 1541 (Fed. Cir. 1984); *Union Carbide Corp. v. Am. Can Co.*, 724 F.2d 1567, 1577 (Fed. Cir. 1984); *Chore-Time Equip., Inc. v. Cumberland Corp.*, 713 F.2d 774, 778 (Fed. Cir. 1983).

[22] *E.g.*, *Crown Operations Int'l, Ltd. v. Solutia, Inc.*, 289 F.3d 1367, 1378 (Fed. Cir. 2002); *Biotec Biologische Naturverpackungen GmbH & Co. KG v. Biocorp, Inc.*, 249 F.3d 1341, 1355 (Fed. Cir. 2001); *Chiuminatta Concrete Concepts, Inc. v. Cardinal Indus.*, 145 F.3d 1303, 1312-13 (Fed. Cir. 1998); *Kegel Co. v. AMF Bowling, Inc.*, 127

One of the amici supporting the petitioner suggests that the MST test unfairly prevents generic drug manufacturers from introducing generic forms of patented drug combinations. PhRMA submits that that observation does not withstand scrutiny either, for the Federal Circuit has invalidated drug-combination patents where the claimed drug combination was shown to be obvious under the MST test.[23]

Sound patent policy fostering predictability, uniformity, and stability in the patent law should not be sacrificed just so accused infringers or disenchanted licensees can summarily invalidate a patent. Hard-earned government rights, subject to a statutory presumption of validity,[24] should not be so easily cast

---

F.3d 1420, 1430-31 (Fed. Cir. 1997); *Avia Group Int'l, Inc. v. L.A. Gear Cal., Inc.*, 853 F.2d 1557, 1564 (Fed. Cir. 1988).

[23] *E.g.*, *McNeil-PPC, Inc. v. L. Perrigo Co.*, 337 F.3d 1362, 1370-71 (Fed. Cir. 2003); *Richardson-Vicks Inc. v. Upjohn Co.*, 122 F.3d 1476, 1484 (Fed. Cir. 1997).

[24] 35 U.S.C. § 282. This Court has held that one who seeks to invalidate a patent carries a "heavy burden of persuasion." *Smith v. Hall*, 301 U.S. 216, 233 (1937); *accord Mumm v. Jacob Decker & Sons*, 301 U.S. 168, 171 (1937); *Radio Corp. of Am. v. Radio Eng'g Labs., Inc.*, 293 U.S. 1, 7-8 (1934); *Adamson v. Gilliland*, 242 U.S. 350, 353 (1917). Petitioner and one of the amici contend that a "clear and convincing" evidentiary standard should not apply in an obviousness analysis. That question, however, is not within the scope of the Question Presented and should not be resolved in this case where the record and arguments are incomplete for that issue. Although petitioner and some amici contend that a lower evidentiary standard should apply when a challenger bases its obviousness analysis on prior art not considered by the PTO, neither considers the scenario of when that art is merely cumulative to art considered by the PTO. *See Otto v. Koppers Co.*, 246 F.2d 789, 801 (4th Cir. 1957) ("Astute and enterprising attorneys can always find [prior art] references not of record in the Patent Office, but if they do not involve some substantial element in the defense of anticipation [or obviousness] which was not considered by the Patent Office, the failure to make them record references cannot weaken the statutory presumption [of validity].").

down.[25]

E. Without the "Motivation-Suggestion-Teaching" Test There Are No Meaningful Guidelines for Objectively Analyzing Obviousness

It is notable that while criticizing the MST test, neither petitioner nor its supporting amici have offered alternative guidelines that permit an evaluation of obviousness based on objective evidence to show what one of skill in the art could or could not readily deduce from the prior art. Several amici suggest that the Court should reject the MST test and return to the *Graham* standard. But those amici have not offered any guidelines on how the differences between the claimed invention and the prior art should be assessed in view of the level of skill in the art to answer the statute's question: "Would the invention have been obvious?" The "no standard" approach amounts to an amorphous standard that will not achieve the congressional purposes of bringing stability and uniformity to the patent law. Furthermore, the parties urging the "return to *Graham*" fail to see that the MST test is nothing more than a rule of evidence for implementing the *Graham* standard. Others offer tests that effectively presume that anything that consists of a combination of items found in the prior art can be readily deduced by one of ordinary skill in the art. This Court has long rejected that premise, *see* Section II, *infra*, nor does that premise provide meaningful guidance for evaluating the *Graham* factors.

---

[25] Parties seeking to challenge a patent have alternatives to litigation. Where a substantial new question of patentability exists, they can seek either an *ex parte* or an *inter partes* reexamination in the PTO. 35 U.S.C. § 301 *et seq.* Those proceedings are conducted within the PTO "with special dispatch." 35 U.S.C. §§ 305 & 314(c).

F. Petitioner's Anecdotal Evidence Does Not Show that the "Motivation-Suggestion-Teaching" Test Is a Failed Experiment

Members of this Court have wisely cautioned against imposing by judicial fiat overly strict patentability standards in reaction to random instances of patents of dubious validity. *Jungersen v. Ostby & Barton Co.*, 335 U.S. 560, 572 (1949) (Jackson, J., *dissenting*). Petitioners and amici have offered several examples of anecdotal evidence purportedly showing patents of questionable validity upheld under a suspect application of the MST test, and sentiments of dissatisfaction with the current state of the patent system. That anecdotal evidence and self-interested promotion, however, fails to show that under the totality of the circumstances, the MST test has harmed or fails to beneficially advance the patent system. To the contrary, having the MST test has provided a robust patent system where obviousness challenges must be proven with objective evidence of how one skilled in the art would understand and use the teachings of the prior art rather than a subjective assessment by a judge or jury of whether the differences between the claimed invention and the prior art, considered individually, show the claimed invention would have been obvious. The MST test works especially well with complicated inventions. Concerns about possible mis-application of the test when applied to simple inventions do not lessen the need for the test or justify rejecting it. One cannot seriously question the rapid strides technology has made during the last twenty-four years under the carefully balanced incentive provided by the patent system's promise of limited exclusive rights. Upsetting that balance as the petitioner proposes risks crippling the pace of technology's advance.

II. THE STANDARD FOR DETERMINING OBVIOUSNESS SHOULD NOT BE MERE CAPABILITY OF COMBINING TEACHINGS OF REFERENCES

Petitioner suggests that instead of requiring evidence

of a motivation, suggestion, or teaching to combine the teachings of the prior art, the test should require only that one of skill in the art have the capability to make the combination. That test sets the bar too low.

As the late Chief Judge Markey stated, "Only God works from nothing. Men must work with old elements." *Fromson v. Advance Offset Plate, Inc.*, 755 F.2d 1549, 1556 n.3 (Fed. Cir. 1985) (quoting Markey, J., *Why Not the Statute*, 65 J. Pat. Off. Soc'y 331, 334 (1983)). Accordingly, patentability is not, and never has been, denied merely because all elements of a combination are individually known in the prior art.[26] As this Court noted, if the rule were otherwise for combination patents "not one patent of the kind in a thousand of modern date could be held valid." *Parks v. Booth*, 102 U.S. 96, 104 (1880).[27]

Merely requiring that one of skill in the art have the capability to combine the teachings of the prior art references fails to give any consideration to whether one of skill in the art would, without the patent, know to do so. The merits of an invention can lie in just recognizing that the claimed combination can be made even though in hindsight the invention was simple and its making well within the capability of one of skill in the art.[28]

---

[26] *Cantrell v. Wallick*, 117 U.S. 689, 694 (1886) (rejecting "theory that a patent cannot be valid unless it is new in all its elements as well as in the combination, if it is for a combination" because "no patent for an improvement on a known contrivance or process could be valid" under that theory (citations omitted)); *Parks*, 102 U.S. at 102; *Gould v. Rees*, 82 U.S. 187, 189 (1872); *Seymour v. Osborne*, 78 U.S. 516, 542 (1870); *see also Imhaeuser v. Buerk*, 101 U.S. 647, 660 (1879).

[27] *Accord Panduit Corp.*, 810 F.2d at 1575 ("The notion ... that combination claims can be declared invalid merely upon finding similar elements in separate prior patents would necessarily destroy virtually all patents and cannot be the law under the statute, § 103."); *Connell*, 722 F.2d at 1549.

[28] The poet Milton described that phenomenon over three centuries ago: "The invention all admired, and each how he To be the inventor missed; so easy it seemed, Once found, which yet unfound most would have thought, Impossible!" *Paradise Lost*, Part VI, L. 478-501 (*quoted*

Acknowledging that, and the consequent need to consider whether the combination would have *occurred* to one of skill in the art, this Court has explained:

> [I]t often requires as acute a perception of the relation between cause and effect, and as much of the peculiar intuitive genius which is a characteristic of great inventors, to grasp the idea that a device used in one art may be made available in another, as would be necessary to create the device *de novo*. And this is not the less true if, after the thing has been done, it appears to the ordinary mind so simple as to excite wonder that it was not thought of before. The apparent simplicity of a new device often leads an inexperienced person to think that it would have occurred to any one familiar with the subject; but the decisive answer is that with dozens and perhaps hundreds of others laboring in the same field, it had never occurred to any one before. The practiced eye of an ordinary mechanic may be safely trusted to see what ought to be apparent to every one. . . .
>
> As a result of the authorities upon this subject, it may be said that, if the new use be so nearly analogous to the former one that the applicability of the device to its new use would occur to a person of ordinary mechanical skill, it is only a case of double use; but if the relations between them be remote, and especially if the use of the old device produce a new result, it may at least involve an exercise of the inventive faculty.

---

in Gillette Co. v. S.C. Johnson & Son, Inc., 919 F.2d 720, 726 (Fed. Cir. 1990)).

C. & A. Potts & Co., 155 U.S. at 607-08.[29]

Petitioner's suggested test of merely determining whether one of skill in the art would have the capability to make the claimed combination—without considering whether there is any evidence to show that one of skill would have had the motivation to make the combination—fails to consider the standard pronounced in *C. & A. Potts* of whether the combination "would occur to a person of ordinary mechanical skill." It also fails to heed the statute's command that the invention must be viewed as a "whole." A necessary component of the "whole" is knowing that elements can be combined to create the "whole." The capability of physically combining items or teachings in the prior art does not show that one of skill in the art would have recognized that the "whole" could even have been made from the prior art.[30]

The alternative test suggested by one of the amici of applying a rebuttable presumption that one of skill in the art would be motivated to combine the teachings of the prior art where the references are analogous art also fails to consider whether the thought of the combination would occur to one of skill in the art. It erroneously presumes that the thought would be there. Accordingly, it suffers the same deficiencies as the petitioner's proposed test and should not be adopted.

The Federal Circuit recently suggested in *DyStar* that

---

[29] *See also Diamond Rubber Co. v. Consolidated Rubber Tire Co.*, 220 U.S. 428, 434-35 (1911); *Barbed Wire Patent*, 143 U.S. 275, 282-83 (1892).

[30] *E.g.*, *Hobbs v. Beach*, 180 U.S. 383, 393 (1901) ("the mere change in shape of the dies was a minor part of the work . . . the invention consisting rather *in the idea* that such change could be made, than in making the necessary mechanical alterations") (emphasis added); *Loom Co. v. Higgins*, 105 U.S. 580, 591 (1881) ("Now that [the inventor] has succeeded, it may seem very plain to any one that he could have done it as well. This is often the case with inventions of the greatest merit."); *see also Panduit Corp.*, 810 F.2d at 1572 ("The statute requires utility, novelty and nonobviousness, not complexity.").

the capability of one of ordinary skill to combine teachings of prior art references occasionally may supply the requisite motivation to combine. *DyStar*, *slip op.* at 21, __ F.3d at __, 2006 WL 2806466, at *11. Importantly, however, the court qualified its statement with a companion requirement for a presence of a technology-independent economic driving force motivating one of skill in the art to seek a product or process that could be "stronger, cheaper, cleaner, faster, lighter, smaller, more durable, or more efficient." *Id.* In that context—economic motivation for a product or process having certain improved advantages plus technical capability to modify the technology to achieve the advantage—it can, in many circumstances, make sense to find an implicit motivation to combine teachings of prior art references in a way that will obviously realize the sought after advantage. Absent the economic driving force, it would not make sense to presume that just because one of skill in the art had the technical capability to combine the teachings of the prior art, he or she would have thought to do so. Hence, the Federal Circuit's statement in *DyStar* should not be viewed as endorsing the petitioner's suggested test that mere capability, even in the absence of a technology-independent economic driving force, suffices to prove that it would have been obvious to combine teachings of prior art references.

III. SYNERGY SHOULD NOT BE THE TEST FOR HOLDING A COMBINATION PATENT VALID

The petitioner and some of the amici supporting the petitioner suggest that statements in *Sakraida*, 425 U.S. at 282, and *Anderson's-Black Rock, Inc.*, 396 U.S. at 61, noting the absence of a "synergistic effect" in the claimed invention, should apply as a special definitive test for determining validity of combination patents. Imposing a requirement of synergy is not warranted and would virtually destroy the patent system.

A. The Text of § 103 Does Not Support a Synergy Requirement

The plain language of § 103 shows that an analysis for obviousness must focus on the "*differences* between the subject matter sought to be patented and the prior art" to determine whether "the subject matter as a whole *would have been obvious* at the time the invention was made to a person having ordinary skill in the art to which said subject matter pertains." 35 U.S.C. § 103(a) (emphasis added). Notably, the statute does not say that the "differences" between the subject matter sought to be patented and the prior art must include a new result produced by the claimed invention. Nor does it state that to be unobvious the subject matter must produce a new result. Accordingly, the deliberate[31] absence of a "new result" requirement in the text of § 103 strongly suggests that one should not be read into the statute.[32] *Barnhart v. Sigmon Coal Co.*, 534 U.S. 438, 454 (2002) (refusing to

---

[31] One of the principal drafters of § 103 stated: "Weight should be given to the terms used in the section since a variety of expressions used in decisions were available, including some stated with an extreme degree of strictness, which could have been used as the model for the phraseology to be adopted, but the language selected was of the more moderate variety." FEDERICO, "COMMENTARY ON THE NEW PATENT ACT" at 23, *reprinted in* 75 J. PAT. & TRADEMARK OFF. SOC'Y at 183.

[32] Many things can be unobviously different, but produce the same result. Indeed, this is why in analyzing infringement under the doctrine of equivalents this Court has required a showing that the same *function* is performed in the same *way* to achieve the same *result*, and rejected contentions that infringement should be found where only the same result is achieved. *Graver Tank & Mfg. Co. v. Linde Air Prod. Co.*, 339 U.S. 605, 608 (1950); *Weber Elec. Co. v. E.H. Freeman Elec. Co.*, 256 U.S. 668, 675 (1921). Given the relationship between validity and infringement as exemplified by the maxim "that which [literally] infringes if later, anticipates if earlier," *Peters v. Active Mfg. Co.*, 129 U.S. 530, 537 (1889), a principle that infringement cannot be found merely because the same result is achieved suggests that invalidity should not be found merely because the same result is achieved.

read into statute provisions that Congress could have "clearly and explicitly" included but did not); *Bradley v. Richmond Sch. Bd.*, 416 U.S. 696, 716 n. 23 (1974) ("We are reluctant to read into the statute the very ... limitation that Congress eliminated."); *see also Park 'N Fly, Inc. v. Dollar Park & Fly, Inc.*, 469 U.S. 189, 194 (1985) ("Statutory construction must begin with the language employed by Congress and the assumption that the ordinary meaning of that language accurately expresses the legislative purpose.").

Furthermore, the Patent Act requires a "new and useful" criterion as a condition for patentability under only the utility requirement of 35 U.S.C. § 101,[33] a patentability requirement separate and distinct from unobviousness under § 103. *Diamond v. Diehr*, 450 U.S. 175, 191 (1981). Under traditional rules of statutory construction, where Congress has included a requirement in one statutory provision and omitted it in another, it is to be presumed that the omission was intentional. *Barnhart*, 534 U.S. at 452. Hence, the presence of a "new and useful" requirement in § 101 counsels against construing § 103 to include a requirement that a combination patent must provide a synergistic effect.

B. A Synergy Requirement Is Contrary to the Legislative Purpose of § 103

The legislative history of § 103 does not expressly state that the changes made by the statute legislatively overruled a synergy requirement. But one of the principal authors of the statute has stated that that was the intent of § 103. Addressing how the reasoning of the majority and concurring opinions in *Great Atlantic & Pacific Tea Co. v. Supermarket Equipment Corp.*, 340 U.S. 147 (1950), prompted the drafting committee to develop a new

---

[33] 35 U.S.C. § 101 limits patentable subject matter to a "new and useful process, machine, manufacture, or composition of matter, or any new and useful improvement thereof . . ."

standard for determining patentability to replace the "invention" standard, Judge Rich commented that "what was said in the opinions [was] typical of all that was wrong with the patent law's 'invention' requirement." Rich, *Ghost,,* 1 APLA Q.J. at 32, *reprinted in* 14 Fed. Cir. B.J. at 168-69.

Judge Rich explained that the new patentability standard provided in § 103 overruled *Great A & P* to the extent that case required that special rules, such as synergy, apply to combination patents.[34] With § 103, the drafters intended to establish a uniform standard applicable to all classes of invention without requiring synergy. *Id.* at 32-33, *reprinted in* 14 Fed. Cir. B.J. at 169-70.

Addressing the apparent resurgence of a synergy requirement based on dictum in *Anderson's-Black Rock, Inc.*, 396 U.S. 57, Judge Rich again noted that synergy is "an impossible test, so Section 103 was enacted to replace it." He stated:

> Now what was the dictum in *Black Rock* that bugs people? Well, it was the very idea expressed in *A & P* which stimulated the enactment of Section 103 to supplant it, but which, unhappily, is still current dogma in some courts, namely, that inventions which are a combination of old elements must be tested for patentability (formerly for "invention" now for unobviousness) by an extra severe test—more severe than the test for inventions of other kinds. *A & P* spoke of the "difficulty and improbability of finding invention in an assembly of old elements" and said the whole must in some way exceed the sum of its parts to produce unusual or surprising consequences. That

---

[34] *See also* P.J. Federico, *Origins of Section 103*, 5 APLA Q.J. 87, 95 (1977) (the *Great A & P* case "served to stimulate" the committee meetings that resulted in the new patentability standard of § 103).

> is the "severe test." It was indeed severe—it was an impossible test, so Section 103 was enacted to replace it.
>
> . . . .
>
> Congress in Section 103 threw down the gauntlet to these notions by substituting a different test—the obviousness test—applicable to all inventions alike. Since then no justification can be found for treating one kind of invention differently from another.
>
> . . . .
>
> . . . I doubt that any trial lawyer, ever, is going to be able to meet the "strict test" implicit in the following two unfortunate sentences of the *Black Rock* dictum:
>
> > A combination of elements may result in an effect greater than the sum of the several effects taken separately. No such synergistic result is argued here.
>
> The laws of physics and chemistry in accordance with which all inventions perform do not permit of the judicially imagined magic according to which 2 + 2 = 5. Wherever such a spurious test prevails all patents are invalid. And there are those who think that is heaven.

Rich, *Ghost,* 1 APLA Q.J. at 43-44, *reprinted in* 14 Fed. Cir. B.J. at 177-78.

Given that a synergy requirement presents an almost impossible requirement to meet, has no basis in the text of § 103, and was intended to be eliminated by the enactment of § 103, it should not be adopted.

CONCLUSION

For all the above reasons, the use of the MST test should be upheld.

Respectfully submitted,

DAVID E. KORN
Of Counsel
PHARMACEUTICAL
RESEARCH AND
MANUFACTURERS
OF AMERICA,
950 F Street, NW
Washington, DC
20004
(202) 835-3509

ALLEN M. SOKAL
Counsel of Record
ROBERT A. MATTHEWS, JR.
FINNEGAN, HENDERSON,
FARABOW, GARRETT &
DUNNER, L.L.P.
901 New York Ave., N.W.
Washington, DC 20001
(202) 408-4000

Attorneys for Amicus Curiae
Pharmaceutical Research and
Manufacturers of America

184A

No. 04-1350

FILED
OCT 16 2006
OFFICE OF THE CLERK
SUPREME COURT, U.S.

In The
Supreme Court of the United States

KSR INTERNATIONAL CO.,

Petitioner,

v.

TELEFLEX INC. and TELEFLEX HOLDING CO.,

Respondents.

On Writ Of Certiorari To The United States Court Of Appeals For The Federal Circuit

BRIEF OF FRANKLIN PIERCE LAW CENTER INTELLECTUAL PROPERTY AMICUS CLINIC AS AMICUS CURIAE IN SUPPORT OF RESPONDENTS

THOMAS G. FIELD, JR.
Counsel of Record
Professor of Law
Director, Intellectual Property Amicus Clinic
FRANKLIN PIERCE LAW CENTER
2 White Street
Concord, N.H. 03301
(603) 228-1541

J. SCOTT ANDERSON
Graduate Fellow,
The Intellectual Property Amicus Clinic
FRANKLIN PIERCE LAW CENTER
2 White Street
Concord, N.H. 03301
(603) 228-1541

COCKLE LAW BRIEF PRINTING CO. (800) 225-6964
OR CALL COLLECT (402) 342-2831

TABLE OF CONTENTS

	Page
TABLE OF AUTHORITIES	ii
INTEREST OF AMICI	1
SUMMARY OF ARGUMENT	1
ARGUMENT	
I. Most Patent System Problems Are Beyond The Reach Of The Courts	4
II. The Federal Circuit Cannot Be Fairly Labeled As "Pro-Patent"	8
A. Direct Review Of Patent Refusals May Have Once Favored Applicants	8
B. Since 1982, Direct Review Of Patent Refusals Is Much Less Likely To Favor Applicants	14
C. Collateral Review Of Patent Grants Does Not Favor Patent Holders	15
D. The Federal Circuit Is Uniquely Suited To Adapt The Requirements Of *Graham* For Application In Widely Divergent Circumstances	18
CONCLUSION	22

TABLE OF AUTHORITIES

Page

CASES

Brenner v. Manson, 383 U.S. 519 (1966) 9

Dennison Mfg. Co. v. Panduit Corp., 475 U.S. 809 (1986) 19, 21

Dickinson v. Zurko, 527 U.S. 150 (1999) 6, 9

eBay Inc. v. MercExchange, L.L.C., 126 S.Ct. 1837 (2006) 5

Festo Corp. v. Shoketsu Kinzoku Kogyo Kabushiki Co., Ltd., 535 U.S. 722 (2002) 3, 18

Graham v. John Deere Co., 383 U.S. 1 (1966) ..... *passim*

Ill. Tool Works Inc. v. Independent Ink, Inc., 126 S.Ct. 1281 (2006) 17

In re Arkley, 455 F.2d 586 (CCPA 1972) 10

In re Lee, 277 F.3d 1338 (Fed. Cir. 2002) 9

In re Mixon, 470 F.2d 1374 (CCPA 1973) 10

Lyon v. Boh, 1 F.2d 48 (S.D.N.Y. 1924) 6

Oddzon Products, Inc. v. Just Toys, Inc., 122 F.3d 1396 (Fed. Cir. 1997) 18

Pfaff v. Wells Electronics, Inc., 525 U.S. 55 (1998) 17

South Corp. v. U.S., 690 F.2d 1368 (Fed. Cir. 1982) 18

Teleflex Inc. v. KSR Int'l Co., 298 F.Supp.2d 581 (E.D. Mich. 2003) 19

Teleflex Inc. v. KSR Int'l Co., 119 Fed. Appx. 282 (Fed. Cir. 2005) 20

TABLE OF AUTHORITIES – Continued

Page

STATUTES AND RULES

28 U.S.C. § 1295(a) (2006) 14

35 U.S.C. § 103(a) (2001) 11, 18

35 U.S.C. § 122 (2001) 8

35 U.S.C. § 271(d) (2001) 17

35 U.S.C. § 282 (2001) 13

An Act to Amend the Trademark Act of 1946 and Title 35 of the United States Code to Change the Name of the Patent Office to the "Patent and Trademark Office," Pub.L. 93-596, § 1, 88 Stat. 1949 (1975) 3

Biotechnology Process Patents Act of 1995, Pub. L. 104-41, § 1, 109 Stat. 351 18

Consolidated Appropriations Act of 2000, Pub. L. 106-113, Div. B, § 1000(a)(9); Title IV, § 4502(a); 113 Stat. 1536, 1501A-561 8

Federal Courts Improvement Act of 1982, Pub. L. 97-164, Title I, § 127(a), 96 Stat. 25 (1982) 13

Manual of Patent Examining Procedure (MPEP) 2141.01(a) Analogous and Nonanalogous Art (8th Ed. 2001, rev'd Aug. 2006) 19, 20

Patent Act of 1952 § 101, 66 Stat. 797 11

Patent Act of 1952 § 102, 66 Stat. 797 11

Patent Act of 1952 § 102(b), 66 Stat. 797 17

Patent Act of 1952 § 103, 66 Stat. 798 11

Sup. Ct. R. 37.6 1

TABLE OF AUTHORITIES – Continued

Page

OTHER MATERIALS

Am. Intellectual Prop. Law Ass'n, *AIPLA Response to the National Academies Report Entitled "A Patent System for the 21st Century"* (2004) 18

Board on Science, Technology and Econ. Policy of the Nat'l Research Council of the Nat'l Academies, *A Patent System for the 21st Century* (2004) 5, 6, 15, 16, 20, 21

Federal Trade Commission, *To Promote Innovation: The Proper Balance of Competition and Patent Law and Policy* (2003) 5, 13, 14, 16, 21

Pasquale J. Federico, *Opposition and Revocation Proceedings in Patent Cases*, Study No. 4, of the Senate Subcomm. on Patents, Trademarks and Copyrights of the Comm. on the Judiciary, 85th Cong., 2d Sess. (1957) 7

Thomas G. Field, Jr., *Zurko, Gartside and Lee: How Might They Affect Patent Prosecution?* 44 IDEA 221 (2004) 9

Industrial Innovation: Joint Hearings Before the Senate Comm. on Commerce, Science and Transportation, and Select Comm. on Small Business, and House Comms. on Science and Technology, and Small Business, 96th Cong., 1st Sess., Part 1 (1979) 5

Adam B. Jaffe and Josh Lerner, *Innovation and its Discontents: How Our Broken Patent System is Endangering Innovation and Progress and What to Do About It* (2004) 5, 6, 15

TABLE OF AUTHORITIES – Continued

Page

Fritz Machlup, *An Economic Review of the Patent System*, Study No. 15 of the Senate Subcomm. on Patents, Trademarks and Copyrights of the Comm. on the Judiciary, 85th Cong., 2d Sess. (1958) 4

The National Intellectual Property Law Enforcement Coordination Council, *Report to the President and Congress on Coordination of Intellectual Property Enforcement and Protection*, September 2006 ..... 5, 6

The President's Commission on the Patent System, *"To Promote the Progress of . . . Useful Arts" in an Age of Exploding Technology* (preliminary printing 1966) 2, 8, 9, 10, 13, 14

Steve Seidenberg, *Stating the Obvious*, A.B.A.J., Oct. 2006 9

Martin Shapiro, *The Supreme Court and the Patent Office*, in The Supreme Court and Administrative Agencies, 143 (1968) 12

INTEREST OF AMICI

The sole interest of the Pierce Law Intellectual Property Amicus Clinic in this case is the development and application of patent law to promote innovation and competition.[1] Its director and counsel of record is a former patent examiner who has been involved with the patent system in various roles for over forty years and has taught and written about it for well over thirty. This brief is submitted to provide the Court with scholarly assistance informed by experience.

SUMMARY OF ARGUMENT

Grants of trivial, inoperable and otherwise invalid patents are of long-standing concern, but "To await litigation is – for all practical purposes – to debilitate the patent system." *Graham v. John Deere Co.*, 383 U.S. 1, 18 (1966). Thus, the Court found, "[T]he primary responsibility for sifting out unpatentable material lies in the Patent Office" and went on to flag "a notorious difference between the standards applied by the Patent Office and by the courts." *Id.*

---

[1] Pursuant to Sup. Ct. R. 37.6, amici represent that they have authored this brief in whole; no person or entity other than Franklin Pierce Law Center has made any monetary contribution to its preparation or submission. We have been informed that counsel for both parties have given blanket consent to the filing of amicus briefs.

Students in the Clinic who assisted with research and in drafting this brief are Graduate Fellows and LL.M. candidates, James Scott Anderson and Mary Anne Copeland; LL.M. candidate, Jennifer L. Fessler; and J.D. candidates, Sumon Dasgupta, Yelena Morozova and Ryan P. O'Connor.

Although courts cannot prevent invalid patents from issuing, they may encourage it. Shortly after *Graham* was decided, a panel appointed by President Johnson faulted the U.S. Court of Customs and Patent Appeals ("CCPA") for much of the "notorious difference" flagged in *Graham*. The President's Commission on the Patent System, *"To Promote the Progress of . . . Useful Arts" in an Age of Exploding Technology*, *e.g.*, at 25 and 29 (preliminary printing 1966).

That report expresses the belief that CCPA decisions requiring the Patent Office to resolve doubts in favor of applicants meant that patents would be granted on records that other courts would later find unacceptable. Fearing erosion of a strong presumption of patent validity, it made several recommendations. Perhaps the most striking was a proposal that CCPA decisions be reviewable in the U.S. Court of Appeals for the D.C. Circuit ("D.C. Circuit"). *Id.* at 30. That did not come to pass, but creation of the U.S. Court of Appeals for the Federal Circuit ("Federal Circuit"), in 1982, more than satisfied the Johnson Commission's underlying objective of having direct review conducted in a court of general jurisdiction.

Although the Federal Circuit was primarily intended to eliminate forum shopping among circuits with seemingly divergent patentability standards, the scope of its jurisdiction has proven otherwise beneficial. Reviewing all refusals to grant patents directly and all allegations of invalidity collaterally, the Federal Circuit can tap experience acquired in one context to inform its decisions in the other.

Thus, since 1982, unlike the CCPA earlier and the Patent and Trademark Office ("PTO")[2] even now, the Federal Circuit must confront the consequences of unwarranted grants. Critics appear to disregard the importance of that perspective in developing a sound patent system and the challenge of developing a balanced approach to obviousness. As stated in *Graham*:

> What is obvious is not a question upon which there is likely to be uniformity of thought in every given factual context. The difficulties, however, are comparable to those encountered daily by the courts in such frames of reference as negligence and scienter, and should be amenable to a case-by-case development.

383 U.S. at 18.

Aside from opinions of this Court supplemented by those of the prior U.S. Court of Claims, however, the Federal Circuit began operation without binding precedent for collateral review of patent validity. Thus, it is important to credit an ongoing, if diminished, need for case-by-case development less than twenty-five years later. It is also important to credit once again the Federal Circuit's objective of reducing "excessive uncertainty and burdens [on] legitimate innovation" as well as its unique capacity to do so. *Festo Corp. v. Shoketsu Kinzoku Kogyo Kabushiki Co., Ltd.*, 535 U.S. 722, 737 (2002).

---

[2] *See* An Act to Amend the Trademark Act of 1946 and Title 35 of the United States Code to Change the Name of the Patent Office to the "Patent and Trademark Office," Pub.L. 93-596, § 1, 88 Stat. 1949 (1975).

This brief therefore urges that the disposition of this case should not be influenced by concerns that the Federal Circuit favors patent applicants or grantees more than necessary to sustain the economic strength of the United States.

ARGUMENT

I. Most Patent System Problems Are Beyond The Reach Of The Courts.

Studies of the U.S. patent system since the late 1950s identify a wide range of difficult issues but few solutions. Fritz Machlup's comprehensive 1958 economic study of patents – one of thirty in a series commissioned by the U.S. Senate – took the long view. *An Economic Review of the Patent System*, Study No. 15 of the Senate Subcomm. on Patents, Trademarks and Copyrights of the Comm. on the Judiciary, 85th Cong., 2d Sess., at 2 (1958) ("*An Economic Review*"). Beginning with reference to a Venetian grant in 1474, *id.* at 2, Machlup reported that patents had been regarded with much hostility in the latter half of the Nineteenth Century. *Id.* at 4. Indeed, the Dutch and Japanese patent systems, for example, were abolished in 1869 and 1873, only to be reinstated in 1910 and 1885, respectively. *Id.* at 4-5. In classic scholarly fashion, Machlup went on to say of the U.S. patent system: "It would be irresponsible on the basis of our present knowledge of its economic consequences, to recommend instituting one. But since we have had a patent system for a long time, it would be irresponsible . . . to recommend abolishing it." *Id.* at 80.

Two decades later, Frank Press, former President of the National Academy of Sciences, then Science Advisor to the President, strongly disagreed with Machlup's agnostic assessment: "For twenty-five years the question of innovation and Americans' ability to innovate has been ... studied to death." *Industrial Innovation: Joint Hearings Before the Senate Comm. on Commerce, Science and Transportation, and Select Comm. on Small Business, and House Comms. on Science and Technology, and Small Business*, 96th Cong., 1st Sess., Part 1, at 40 (1979).

Despite Press's assessment, the U.S. patent system continues to face problems. Many are discussed in several reports. One was cited in *eBay Inc. v. MercExchange, L.L.C.*, 126 S.Ct. 1837, 1842 (2006) (Kennedy, J., concurring) – the Federal Trade Commission, *To Promote Innovation: The Proper Balance of Competition and Patent Law and Policy* (2003) ("FTC report"). It is joined by two other essentially coterminous accounts – Board on Science, Technology and Economic Policy of the National Research Council of the National Academies, *A Patent System for the 21st Century* (2004) ("NRC report"), and Adam B. Jaffe and Josh Lerner, *Innovation and its Discontents: How Our Broken Patent System is Endangering Innovation and Progress and What to Do About It* (2004) ("*Discontents*").

Exactly what sparked these efforts is unclear. The arguably new and nearly intractable remedial tensions addressed in *eBay* surely played a role. Moreover, interest in patents (and other forms of intellectual property) is apt to parallel the importance of intellectual property in domestic and global economies. As stated in a new Bush Administration report, "Few issues are as important to the

current and future economic strength of the United States as our ability to create and protect intellectual property."[3] Yet, it goes on to claim: "Through the applied talents of American inventors, researchers, entrepreneurs, artists and workers, we have developed the most dynamic and sophisticated economy the world has ever seen." *Id.* The first part of that claim would be difficult to make were the U.S. patent system fundamentally flawed.

Yet, some urge that trivial, even silly, patents such as those for swinging sideways or for exercising cats with laser pointers signal a broken system. *See, e.g., Discontents*, at 34. Such accounts grab attention, but they do not indicate a malfunctioning, much less recently broken, patent system. As the NRC report, observes at 48: "[W]hether [such] examples are aberrant or typical, or, for that matter, increasing or declining in frequency is impossible to determine on the basis of a few handpicked examples. . . . " As it also notes, "a nontrivial number of errors . . . are inevitable in a system whose output by 3000 individual examiners is 167,000 patents annually." *Id.*

Moreover, skeptical examiners may issue patents when, for example, prior art is not available or easily accessed. They may also do so when little would be gained from investing time for miniscule returns. As noted by Judge Learned Hand in *Lyon v. Boh*, 1 F.2d 48, 50 (S.D.N.Y. 1924): "Courts have descanted upon the abuse again and again, but the antlike persistency of [patent] solicitors has overcome, and I suppose will continue to

---

[3] National Intellectual Prop. Law Enforcement Coordination Council, *Report to the President and Congress on Coordination of Intellectual Property Enforcement and Protection*, at 1, September 2006.

overcome, the patience of examiners, and there is apparently always but one outcome."

It has long been a common goal to reduce as much as possible, for example, through pre-grant publication and pre- and post-issue administrative scrutiny, the high cost of resolving validity disputes in litigation. All recent studies continue the pattern by recommending additional or expanded administrative measures to that end. Failure to adopt such measures, however, cannot be attributed to lack of awareness or experience. *See, e.g.*, Pasquale J. Federico, *Opposition and Revocation Proceedings in Patent Cases*, Study No. 4, of the Senate Subcomm. on Patents, Trademarks and Copyrights of the Comm. on the Judiciary, 85th Cong., 2d Sess. *passim* (1957).

The Federal Circuit sees few applications on direct review and can issue none. The most it or any court could ever do was to find PTO bases for refusal to be unsupported.[4] That courts had no role in granting most patents surely led this Court in *Graham* to observe, "the primary responsibility for sifting out unpatentable material lies in the Patent Office. To await litigation is – for all practical purposes – to debilitate the patent system." 383 U.S. at 18.

---

[4] A PTO claim that the Federal Circuit imposes too high a burden is discussed briefly *infra* at notes 6 and 7. But it will be useful first to consider the CCPA.

II. The Federal Circuit Cannot Be Fairly Labeled As "Pro-Patent".

A. Direct Review Of Patent Refusals May Have Once Favored Applicants.

Graham also flagged "a notorious difference between the standards applied by the Patent Office and by the courts," 383 U.S. at 18, and expressed hope that a Presidential Commission would "develop more efficient administrative procedures and techniques that will further expedite dispositions and at the same time insure the strict application of appropriate tests of patentability." *Id.* at n.10.

The results of that anticipated effort, containing many recommendations, were later published as The President's Commission on the Patent System, *"To Promote the Progress of . . . Useful Arts" in an Age of Exploding Technology* (preliminary printing 1966) ("Johnson Commission report"). None of the report's proposals were soon adopted, but, for example, the seventh called for pre-issue publication, *id.* at 18 – something accomplished only in 1999 by an amendment to 35 U.S.C. § 122 (2001).[5]

Of the Johnson Commission's recommendations, three are relevant to the current controversy. The tenth recommendation, *id.* at 25, read, "The applicant shall have the burden of persuading the Patent Office that a claim is patentable." Without citing *Graham*, it noted that the Patent Commissioner had instructed examiners, "in obedience to views expressed this year by the Supreme Court," to cease resolving all reasonable doubts in favor of

[5] Consolidated Appropriations Act of 2000, Pub. L. 106-113, Div. B, § 1000(a)(9), Title IV, § 4502(a), 113 Stat. 1536, 1501A-561.

applicants. *Id.* Yet, it wondered "how courts directly reviewing Patent Office practice will treat this change." *Id.*

The thirteenth recommendation read, "A Patent Office Decision refusing a claim shall be given a presumption of correctness, and shall not be reversed unless clearly erroneous." *Id.* at 29. What was meant by the standard is unclear, for it said, "This recommendation should settle the conflict over 'scope of review,' by defining the court's responsibility to be *review* of the Patent Office decision, rather than substitution of its own judgment." *Id.* That approach was not adopted until many years later following *Dickinson v. Zurko*, 527 U.S. 150 (1999). It is still subject to some debate, but *In re Lee*, 277 F.3d 1338 (Fed. Cir. 2002), a decision faulted by PTO officials,[6] seems to apply it correctly.[7]

The fourteenth recommendation, at 30, makes clear the target of the tenth and thirteenth: "Either the applicant or the Patent Office may appeal from a decision of the Court of Custom and Patent Appeals to the United States Court of Appeals for the District of Columbia."[8] Citing *Graham's* reference to "a notorious difference" between standards of the Office and the courts, the Johnson Commission explained:

> This difference results not only from the fact that proceedings in the Patent Office are *ex parte*, but

---

[6] *See, e.g.*, Steve Seidenberg, *Stating the Obvious*, A.B.A.J., Oct. 2006, at 14.

[7] *See, e.g.*, Thomas G. Field, Jr., *Zurko, Gartside and Lee: How Might They Affect Patent Prosecution?*, 44 IDEA 221 *passim* (2004).

[8] That recommendation also proposed, as held in *Brenner v. Manson*, 383 U.S. 519 (1966), that either party could seek certiorari.

> also because the C.C.P.A., which to a large extent determines the standards applied . . . , is a court which has neither general jurisdiction nor jurisdiction in infringement cases.
>
> Under the recommendation, all immediate direct review of the Patent Office would be subject to further review by . . . the District of Columbia Circuit. Thus, a single court of general jurisdiction ordinarily would be the final reviewing authority.

Johnson Commission report at 30.

The *Graham* Court did not mention the CCPA as possibly responsible for allegedly lax standards, but one CCPA judge tended to agree with the Johnson Commission's assessment. Dissenting in *In re Arkley*, 455 F.2d 586, 593 (CCPA 1972), Judge Worley said:

> Although the majority would undoubtedly disclaim the notion, I cannot help but feel that it is resolving doubt on the issue presented in favor of the applicants. In doing so, this court is not doing the applicants or the public any favor. Rather it is bestowing on the applicants a license to litigate . . . at a time when, it is reliably estimated, 80% of contested patents are being held invalid in other federal courts.

Moreover, in *In re Mixon*, 470 F.2d 1374, 1401 (CCPA 1973), Judge Worley reflected:

> Inasmuch as this is doubtless my last opinion as Chief Judge . . . , I take this opportunity to make a few personal observations . . . solely in my individual capacity as a member of this court for the past twenty-two years. During that time I have resolved reasonable doubt on questions of

> patentability in favor of the inventor, never sure whether I was helping or harming him, the public or the patent system. Frankly, the issue of obviousness of appellants' process here is sufficiently close to me to justify consideration of the policy behind our "resolution of doubt" practice which began during the early days of this court's jurisdiction in patent matters.
>
> . . . . On otherwise substantially identical records, it makes little if any sense to allow the fortunes of patentability to be potentially determined by the route of review – to this court which has followed the rule of doubt policy, or to the District Court and Court of Appeals for the District of Columbia Circuit which do not – chosen by an applicant. . . . Nor does it make sense to accord a duly issued patent a presumption of validity when its issuance is dependent on resolving an admitted doubt . . . in the applicant's favor. I . . . think it is time to join our sister courts and the Patent Office in abandoning the rule. . . .

"Supplemental Opinion" (footnote omitted).

What was meant by the "rule of doubt" is unclear, but, *a priori*, doubts must be resolved one way or another. The statute is not helpful. Section 101 of the Patent Act of 1952 states: "Whoever invents . . . *may* obtain a patent subject to the conditions and requirements of this title," whereas § 102 of the Act reads, "A person *shall be entitled* to a patent unless . . . " and § 103 reads, "A patent *may not* be obtained . . . "[9] [Emphases added.] This conflict was not

---

[9] Quoted language is unchanged since 1952, but language considered in *Graham* currently appears in 35 U.S.C. § 103(a) (2001).

noted, much less resolved, in *Graham*. The opinion nevertheless seems to hold: "When in doubt, don't issue the patent."[10]

Although the CCPA may have favored applicants, it is unclear that it did. Soon after *Graham* was decided, Martin Shapiro observed:

> Even the continually high gross rate of invalidations by the Supreme Court cannot "prove" that Court and Office are using different standards. The Court does not review every patent the Office issues ... This phenomenon is frequently encountered in judicial review of administration. The clearly correct agency decisions are not appealed to the courts. The judges only get those that the agency itself thought of as on the borderline, but was forced to make one way or the other. Getting only the shaky decisions, the court's percentage of agency reversals climbs far above what it would be if the courts got all the decisions to review.

The Supreme Court and the Patent Office, in The Supreme Court and Administrative Agencies, 143, at 185-86 (1968).

Shapiro also pointed out: "When a Patent Office decision is reviewed by the courts in an infringement suit, however, ... [t]he court in effect enlists the alleged infringer.... Since finding a prior invention is the surest way of winning his case, the infringer is likely to do a good job." *Id.* at 191-92.

---

[10] The principal author of this brief recalls neither instruction nor discussion, but, as a patent examiner forty years ago, he took that approach.

Moreover, infringers are apt to have far more resources to seek prior art and economic motivation to invalidate patents than applicants had in seeking them.[11] Alleged infringers also have stronger motivation to invalidate a patent than the agency had to prevent it from issuing.

Other differences between collateral and direct review should also be considered. In the latter context, would-be patentees are opposed only by the agency. Also, on direct review, cases are styled in inventors' names, possibly inducing a measure of sympathy. By the time litigation occurs, granted patents are apt to have been assigned, and assignees are unlikely to be viewed as favorably as applicants – particularly if regarded as "monopolists" or "trolls". Such differences are inherent.

As claimed by the Johnson Commission, applicants may have been even further favored by the CCPA on direct review. If so, that potential has since been eliminated with creation of the Federal Circuit by the Federal Courts Improvement Act of 1982, Pub. L. 97-164, 96 Stat. 25.

---

[11] Recommendation 2 in the FTC report, for example, calls for reducing the burden needed to invalidate patents. Executive Summary at 8. The current burden under 35 U.S.C. § 282 (2001), however, appears to have been uniformly recognized long before creation of the Federal Circuit and may be justified on the basis of those and other advantages to infringers.

B. Since 1982, Direct Review Of Patent Refusals Is Much Less Likely To Favor Applicants.

Before 1982, a jurisdictional fence separated most appellate judges in patent cases. The largest group sat on numbered circuits. They saw patents rarely, and only in the context of infringement or antitrust suits. Some were skeptical, if not hostile. The smallest group sat on the CCPA. Having major responsibility for direct agency review, CCPA judges, and perhaps most attorneys who practiced before them, saw patents frequently but never in the context of infringement, much less antitrust, disputes.

Further, Justices of this Court and judges on the D.C. Circuit could review Patent Office decisions both directly and collaterally, as well as assess the role of patents in antitrust disputes. Still, neither occurrence was frequent.

As noted above, the potential for untoward consequences based on differences in judicial experience and perspectives ended with creation of the Federal Circuit in 1982. Since then, as noted in the FTC report, "The Court of Appeals for the Federal Circuit, the sole court for most patent law appeals, has brought stability and increased predictability to various elements of patent law. This has reduced legal uncertainty and facilitated business planning." Executive Summary, at 4.[12]

Moreover, the objectives of the Johnson Commission's fourteenth recommendation, discussed *supra*, seem to have been exceeded. Because, under 28 U.S.C. § 1295(a) (2006), the Federal Circuit reviews both refusals directly

---

[12] This, too, helps justify the status quo discussed *supra* note 11.

and grants collaterally, its patent jurisprudence is self-correcting. On a practical level, if the Federal Circuit makes it too difficult for the PTO, in the former situation, to reject patent claims as obvious, that should become apparent when the court later reviews challenges to validity.[13] Unlike the CCPA or the PTO,[14] the Federal Circuit sees first-hand the consequences of unwisely granted patents and has developed its jurisprudence accordingly. Thus, the Federal Circuit's jurisdiction is well suited to development of balanced patentability standards.

C. Collateral Review Of Patent Grants Does Not Favor Patent Holders.

Because its decisions are informed by considerable experience, the Federal Circuit has not seen a flood of winning (or losing) challenges based on obviousness. Yet, more widely noted and more hostile than most of the recent studies, Jaffe and Lerner in *Discontents* identify the Federal Circuit's being "pro-patent" as a major contributor to a broken patent system. *Id., e.g.*, at 2 and 101.

Particularly with regard to obviousness, the NRC report at 61-62, recounts that others, too, have maintained that the Federal Circuit unduly favors applicants or patentees. That report, however, "did not reach a position on their significance with respect to non-obviousness generally." *Id.* at 62. Expressing concern about the application of the standard to genomic and business innovation, the NRC report also notes: "This may be primarily an issue in emerging technologies, where fairly broad patents

---

[13] Evidence of that, however, is lacking. *See supra* at note 7.

[14] *See supra* note 2.

may be granted early on, and fewer but narrower patents are granted as the field matures, more prior art becomes available, and examiners become more familiar with it." *Id.*[15]

Yet, genomic and business innovations have nothing in common aside from their novelty as patentable subject matter. Those technologies and others sure to emerge in the future may well challenge the PTO and the courts. That, however, is not a problem posed by the present case.

Regarding the obviousness test under consideration, the FTC report does express general concern. It nevertheless concludes, "The Federal Circuit's most recent articulations of the suggestion test ... would better facilitate implementation of the test in ways sensitive to competitive concerns." Executive Summary at 12. Perhaps that, too, is a product of experience. Expressing a consistent theme, the NRC report, at 62, notes "evidence that the Federal Circuit judges appointed more recently are more likely to uphold a patent against a non-obviousness argument."

Many patent-system critics put key stakeholders in opposing camps. This paradigm, however, does not fit

---

[15] Apparently even in that regard some disagree. *See* Am. Intellectual Prop. Law Ass'n, *AIPLA Response to the National Academies Report Entitled "A Patent System for the 21st Century"* at 10 (2004):

> AIPLA believes that the courts, including the Federal Circuit, have applied the standard of non-obviousness with both the needed rigor and the appropriate vigor, and they have done so with a commendable consistency over the past two decades. *If a difficulty exists with application of the non-obviousness standard today, it does not lie in the patent statute or in the substantive law of non-obviousness as applied by the courts.*

[Emphasis added.]

reality; the same stakeholders do not always make the same arguments. An owner may argue for one standard when seeking a patent or defending its validity, and soon thereafter argue for a different standard when attacking the validity of a competitor's patent.

Moreover, the law permits and, in fact, encourages stakeholders to advance potentially conflicting arguments. Patent owners who license technology *to* others, often also need to obtain licenses *from* others. Competitors may become locked in the détente imposed by mutually-blocking patents, for example, but most can negotiate with the knowledge that available legal arguments are not proscribed by their status. This, too, produces balanced results.

It takes time to resolve tensions that can be described as between owner-users and user-owners, but tensions caused by stakeholders' roles shifting back and forth keep the system in balance. From that perspective, the Federal Circuit is an excellent idea. Its judges are in a position to appreciate both the positive and negative effects of resolving validity and other patent issues.

Federal Circuit opinions cannot please everyone, but the court's interpretation of 35 U.S.C. § 271(d) (2001), recently rejected in *Illinois Tool Works Inc. v. Independent Ink, Inc.*, 126 S.Ct. 1281 (2006), cannot be seen to favor patent holders or to show disrespect for precedents of this Court.

The interpretation of Section 102(b) of the Patent Act of 1952, 66 Stat. 797, approved in *Pfaff v. Wells Electronics, Inc.*, 525 U.S. 55 *passim* (1998), is similar. Although more favorable than an interpretation proposed by the Solicitor General, *Pfaff*, 525 U.S. at 68 n.14, it was less

favorable to applicants and patentees than other circuits' interpretations prior to 1982; 525 U.S. at 60. Likewise, the more flexible doctrine of equivalents rule substituted by *Festo*, 535 U.S. at 737, favors patent owners more than the rigid rule that had been adopted by the Federal Circuit.[16]

D. The Federal Circuit Is Uniquely Suited To Adapt The Requirements Of *Graham* For Application In Widely Divergent Circumstances.

To have all patent disputes resolved in one U.S. court of appeals, a price had to be paid. Unable to regard often conflicting prior decisions of all other circuits as precedential, the new court faced a problem. It was resolved in *South Corp. v. United States*, 690 F.2d 1368, 1369: "[T]he holdings of our predecessor courts, the U.S. Court of Claims and the U.S. Court of Customs and Patent Appeals, announced by those courts before the close of business September 30, 1982, shall be binding as precedent in this court." Thus, aside from opinions of this Court supplemented by those of the Court of Claims, the Federal Circuit began operation without precedents to govern issues that arise only in infringement litigation.

---

[16] Many other instances could be cited. Among them is *Oddzon Products, Inc. v. Just Toys, Inc.*, 122 F.3d 1396 (Fed. Cir. 1997) (construing a 1984 amendment to 35 U.S.C. § 103 to expand eligible prior art beyond what some would prefer). The amendment under consideration there as well as the Biotechnology Process Patents Act of 1995, Pub. L. 104-41, § 1, 109 Stat. 351 (amending § 103) also indicate that Congress will amend the obviousness standard when it perceives a problem. Yet the language at issue here has been unchanged since the Patent Act was codified in 1952.

Nevertheless, soon after its creation, this Court recognized the Federal Circuit's unique abilities: "[We] lack the benefit of the Federal Circuit's informed opinion on the complex issue of the degree to which the obviousness determination is one of fact." *Dennison Mfg. Co. v. Panduit Corp.*, 475 U.S. 809, 811 (1986). The need for case-by-case development, although diminished, continues twenty years later.

Especially with regard to non-obviousness, difficulties are compounded by the diversity of arts to which the requirement must be applied. This is illustrated by Manual of Patent Examining Procedure (MPEP) 2141.01(a) Analogous and Nonanalogous Art (8th Ed. 2001, rev'd Aug. 2006), which provides separate, detailed explanations for the chemical, mechanical, electrical and design arts. In general, however, MPEP 2141.01(a) obligates examiners to seek and apply art not directly relevant to claimed subject matter. Thus, persons skilled in particular technologies are often held accountable for what is taught more broadly – even in arguably distinct fields.

The trial court in the case on review recognized the importance of analogous art:

> The fact that Asano and the modular pedal position sensors teach the invention disclosed in claim 4 does not render their combination obvious, however, unless there is "some motivation or suggestion to combine the prior art teachings," either in the prior art itself, or by reasonable inference from the nature of the problem, or from the knowledge of those of ordinary skill in the art.

Teleflex Inc. v. KSR Int'l Co., 298 F.Supp.2d 581, 593 (E.D. Mich. 2003).

As the opinion on review points out, the trial court then concluded, "had Asano been cited to the patent examiner, the examiner would have rejected claim 4 as obvious." *Teleflex Inc. v. KSR Int'l Co.*, 119 Fed. Appx. 282, 288 (Fed. Cir. 2005). Yet the Asano reference that allegedly makes the invention at issue obvious was a U.S. patent, not something difficult to find or in a foreign language. It was as readily available to the examiner as to the patentee. Given the examiner's obligation under MPEP 2141.01(a), it does not seem unreasonable for the Federal Circuit to have asked the trial court on remand to explain why an available reference not cited *by* an examiner should be regarded as analogous.

Such issues are addressed by other *amici*, but separate discussion of various arts in MPEP 2141.01(a) warrants notice. That the PTO regards separate discussions as necessary suggests the difficulty – if not impossibility – of articulating a single approach to be implemented by all examiners, much less one that would meet all needs in infringement suits.

As stated in the NRC report at 61: "Patents on trivial inventions may confer or help to sustain significant market power. At the same time, an overly restrictive nonobviousness standard could discourage investment and delay new entrants to a market." Optimal levels of nonobviousness required for patentability in various technologies may not be as critical to the economy as short-term interest rates set by the Federal Reserve Board's Open Market Committee. But neither can signals be as precisely and quickly adjusted, nor can people deciding where to invest talent and other resources as readily perceive them.

In 1966, this Court foresaw that development of proper obviousness standards would call for a case-by-case approach. *Graham*, 383 U.S. at 18. Whether, as some thought, the limited jurisdiction of a predecessor court narrowed that court's vision and hindered PTO efforts to apply correct standards is unclear. It is also irrelevant; the Federal Circuit is not the CCPA.

Appreciation for the significance of the Federal Circuit's broad jurisdiction is sometimes lacking. The scope of that jurisdiction nevertheless fosters a balanced approach to obviousness. As noted above, recent FTC and NRC reports do not find its approach unbalanced – nor does the record on review. Thus, nothing refutes this Court's previous acknowledgment of the Federal Circuit's unique qualifications to meet the need for case-by-case development and application of obviousness standards. *Dennison*, 475 U.S. at 811.

CONCLUSION

The economic stakes are high, but the Federal Circuit is uniquely qualified to develop and refine tests of obviousness as needed to cover a range of arts on both direct and collateral review of PTO decisions. Absent clear evidence that the Federal Circuit disregards relevant precedents of this Court, the judgment below should be affirmed.

Respectfully submitted,

THOMAS G. FIELD, JR.
Counsel of Record
Professor of Law
Director, Intellectual Property
Amicus Clinic
FRANKLIN PIERCE LAW CENTER
2 White Street
Concord, N.H. 03301
(603) 228-1541

J. SCOTT ANDERSON
Graduate Fellow,
The Intellectual Property
Amicus Clinic
FRANKLIN PIERCE LAW CENTER
2 White Street
Concord, N.H. 03301
(603) 228-1541

849E

(47)

No. 04-1350

FILED
OCT 16 2006
OFFICE OF THE CLERK
SUPREME COURT, U.S.

IN THE

Supreme Court of the United States

KSR INTERNATIONAL CO.,

Petitioner,

v.

TELEFLEX INC. AND TECHNOLOGY HOLDING CO.,

Respondents.

On Writ of Certiorari to the United States Court of Appeals for the Federal Circuit

BRIEF OF PRACTICING PATENT ATTORNEYS AS *AMICI CURIAE* IN SUPPORT OF RESPONDENTS

CHRISTOPHER R. BENSON
2705 Pearce Road
Austin, TX 78730
(512) 527-9103

STEPHEN G. KUNIN
OBLON, SPIVAK, MCCLELLAND,
MAIER & NEUSTADT, P.C.
1940 Duke Street
Alexandria, VA 22314
(703) 413-3000

WILLIAM P. O'MEARA
KLAAS, LAW, O'MEARA
& MALKIN, P.C.
1999 Broadway, Suite 2225
Denver, CO 80202
(303) 298-9888

WILLIAM W. COCHRAN
Counsel of Record
SAMUEL M. FREUND
JAMES R. YOUNG
CHRISTOPHER P. WHITHAM
COCHRAN FREUND
& YOUNG LLC
2026 Caribou Drive
Fort Collins, CO 80525
(970) 492-1100

TABLE OF CONTENTS

Page

TABLE OF CONTENTS i

TABLE OF AUTHORITIES iii

I. Summary of Arguments 1

II. Practical Experience of *Amici Curiae* Practicing Attorneys 2

III. Arguments 3

A. Certainty is Provided by the Current "Suggestion, Teaching or Motivation" Standard for Obviousness that has Led to a Strong Patent System in the U.S. 3

1) The Current Standard 3

2) Other Standards Have Been Used that are Too Stringent and/or Do Not Provide Certainty 6

3) Subjective Tests Shift the Burden of Going Forward and the Requirement that the Examiner Must Establish a *Prima Facie* Case 7

4) A More Stringent Standard of Patentability Will Not Result in Fewer Unworthy Patents 8

B. The Effect That a Weak Patent System Would Have on Innovation in the U.S. as a Result of the Adoption of an Uncertain Standard or a Heightened standard for Determining Non-Obviousness 9

1) The Strong U.S. Patent System Fuels Innovation in the U.S. 9

2) Investment Money to Develop Inventions Has Been Available as a Result of a Strong Patent System.... 10

3) Innovation Will Suffer from a Weaker Patent System..... 10

C. Disruption Will Be Created by a Change in the Standard of Obviousness..... 11

IV. Conclusion 11

TABLE OF AUTHORITIES

CASES

ACS Hosp. Sys., Inc. v. Montefiore Hosp., 732 F.2d 1572, 221 USPQ 929 (Fed. Cir. 1984) 4

Funk Bros. Seed Co. v. Kalo Innoculant Co., 333 U.S. 127, 76 USPQ 280 (1948) 6

Graham v. John Deere Co., 383 U.S. 1, 148 USPQ 459 (1966) 3, 6

Great Atl. and Pac. Tea Co. v. Supermarket Equip. Corp., 340 U.S. 147, 87 USPQ 303 6

In re Geiger, 815 F.2d 686, 2 USPQ2d 1276 (Fed. Cir. 1987) 4

In re Oetiker, 977 F.2d 1443, 24 USPQ2d 1443 (Fed. Cir. 1992) 4

In re Raynes, 7 F.3d 1037, 28 USPQ2d 1630 (Fed. Cir. 1993) 4

U.S. v. Adams, 383 US 39, 148 USPQ 479 (1966) 3

STATUTES

35 U.S.C. § 102 4

CONSTITUTIONAL PROVISIONS

U.S. Const. art. I, § 8 8

Interest of *Amici Curiae* Practicing Patent Attorneys

This brief is filed with the consent of the parties[1] on behalf of Teleflex, Inc., and Technology Holding Co. The *Amici Curiae* Practicing Patent Attorneys, who have extensive experience in both U.S. and foreign patent practice, believe that the United States has, by far, the best patent system in the world, and we would like to keep it that way. The Practicing Patent Attorneys are concerned that the current objective evidentiary standard for showing obviousness under 35 U.S.C. § 103, as set forth by the Federal Circuit, may be overturned. It is our opinion that the current evidentiary standard, which requires a showing of some suggestion, teaching, or motivation to combine prior art references to render an invention obvious, is an objective, workable and predictable standard that makes the best utilization of evidence to judge the validity of patents.

I. Summary of Arguments

Every patent system includes a few patents on inventions that are unworthy of patent protection ("unworthy patents"). From our practical experience, the current test for obviousness that has been established by the Federal Circuit is not the cause for the issuance of unworthy patents. Our observations are that an occasional improper application of the current test for non-obviousness, not the test itself, is a primary cause for such unworthy patents. The issue of obviousness is almost always raised during the prosecution of patent applications and is therefore the most important issue with respect to patentability. As such, it is our opinion, that a change in the current objective

---

[1] The parties' blanket letters of consent have been filed with the Clerk in compliance with Rule 37.3. In compliance with Rule 37.6, this brief was not authored in whole or in part by counsel for any party. No person or entity other than the *amici* made a monetary contribution to the preparation or submission of this brief.

standard of obviousness to a less certain, more subjective standard, or to a stricter standard for obtaining patents, would have far-reaching, undesirable effects. As explained below, both a less certain standard or a heightened standard would clearly weaken the U.S. patent system. Adopting a stricter standard will not rid the patent system of unworthy patents, which will exist under all standards, but rather, will alter the extensive entrepreneurial, risk-based investment structure that fuels innovation and invention development that we have witnessed in the U.S.

II. Practical Experience of *Amici Curiae* Practicing Attorneys

The *Amici Curiae* Practicing Patent Attorneys have over 185 years of cumulative practical experience in the practice of patent law. The *Amici Curiae* Practicing Patent Attorneys have worked as patent examiners and officials in the U.S. Patent and Trademark Office, in large corporations, large law firms, small law firms, government laboratories, and have represented large corporations, as well as individual inventors and small companies. The Practicing Patent Attorneys have practical experience in all phases of patent practice including the preparation and prosecution of patent applications before the United States Patent and Trademark Office and many foreign patent offices, counseling clients with respect to patent matters, prosecuting, defending and functioning as experts in patent infringement cases, preparing opinions relating to validity and infringement of patents, and licensing of patents, trade secrets and know-how. In addition, the Practicing Patent Attorneys work with inventors to obtain funding from private investors tc develop their inventions. The Practicing Patent Attorneys have dealt with thousands of patent applications and patents in their careers, and have real life

practical experience in dealing with all aspects of patent practice, including both U.S. and foreign practice. The Practicing Patent Attorneys have practiced long enough to have witnessed the results of both a strong patent system and a weak patent system. We have observed that a strong patent system, such as our current system, encourages innovation and technological development.

III. Arguments

A. Certainty is Provided by the Current "Suggestion, Teaching or Motivation" Standard for Obviousness that has Led to a Strong Patent System in the U.S.

1) The Current Standard

In *Graham v. John Deere Co.*, 383 U.S. 1, 148 USPQ 459 (1966), the Court established a three-pronged test for obviousness, i.e., a determination of 1) the scope and content of the prior art; 2) differences between the prior art and the claims at issue; and 3) the level of ordinary skill in the pertinent art. Objective indicia of obviousness can be used to show non-obviousness, including secondary considerations such as commercial success, failure of others, copying by others, licensing and skepticism of experts. *U.S. v. Adams*, 383 US 39, 148 USPQ 479 (1966) decided with *Graham v. John Deere*, *supra*, provided a further test for non-obviousness, i.e., an invention is non-obvious if the prior art "teaches away" or otherwise "deters investigation" in the invention. With these guidelines and rules, the Court of Customs and Patent Appeals and the later formed Court of Appeals for the Federal Circuit developed a requirement that a "suggestion, teaching or motivation" for combining prior art references must be shown to establish a *prima facie* case of obviousness. *See, e.g., ACS Hosp. Sys., Inc. v. Montefiore Hosp.*, 732 F.2d 1572, 221 USPQ 929 (Fed. Cir. 1984) (holding "suggestion or incentive"); *In re Geiger*, 815 F.2d

686, 2 USPQ2d 1276 (Fed. Cir. 1987) (holding "teaching, suggestion, or incentive"); *In re Oetiker*, 977 F.2d 1443, 24 USPQ2d 1443 (Fed. Cir. 1992) (holding "reason, suggestion, or motivation"); *and In re Raynes*, 7 F.3d 1037, 28 USPQ2d 1630 (Fed. Cir. 1993) (holding "teaching, suggestion, or motivation").

The requirement for establishing a *prima facie* case of obviousness is an effective procedural tool that is used in the examination of patent applications in the U.S. Patent and Trademark Office, which allocates the initial burden of going forward with evidence of obviousness to the patent examiner. The allocation of the initial burden on the Patent Office is consistent with 35 U.S.C. § 102 that provides "[a] person is entitled to a patent unless...". To establish a *prima facie* case of obviousness, the examiner must meet three criteria. First, there must be some suggestion, rationale, or motivation to combine the collective teachings contained in the prior art to show all of the elements of the patent applicant's claimed invention, either in the references themselves, or in the knowledge generally available to one of ordinary skill in the art. There must also be a reasonable expectation of success. The expectation of success must also be found in the prior art and not based on the patent applicant's own disclosure. The requirement for providing a *prima facie* case of obviousness provides a reliable and predictable structure in which a determination of obviousness can be made. Establishing a *prima facie* case eliminates consideration of the teachings of the patent applicant's disclosure as evidence of obviousness, which has been referred to as "impermissible hindsight." In that regard, the Federal Circuit has stated that the best defense against the subtle, but powerful, attraction of a hindsight-based obviousness analysis is rigorous application of the requirement for a showing of the suggestion, teaching or motivation to combine prior art references.

The courts have realized that it is human nature to use hindsight in the consideration of obviousness. In other words, for many inventions, once you see the invention, it appears obvious. The courts have struggled with the issue of hindsight for many years. The adoption of the suggestion, teaching or motivation test to combine references has been the result of many years of consideration of this issue. Further, the adoption of the suggestion, teaching or motivation test has resulted in a clear and objective test that eliminates hindsight. The Practicing Attorneys are unaware of any other tests in the U.S. or in other countries that objectively consider the issue of hindsight. Application of the synergy test certainly does not eliminate impermissible hindsight. The seductive nature of hindsight can be dealt with in an objective and predictable manner using the suggestion, teaching or motivation test. Hence, the requirement for showing a suggestion, teaching or motivation to combine references has been the most objective way to eliminate impermissible hindsight.

Having well-formulated, objective criteria for evaluation of the patentability of inventions from evidence that is available to both patent applicants and patent examiners, such as the requirement for showing a suggestion, teaching or motivation to combine the collective wisdom found in the prior art, leads to stronger issued patents. Applicants can perform prior art searches before filing patent applications and determine from the evidence produced in the search whether the prior art shows a suggestion, teaching or motivation to combine prior art references. Hence, patent applicants are less likely to file applications which clearly do not meet the known objective criteria for determining non-obviousness.

2) Other Standards Have Been Used that are Too Stringent and/or Do Not Provide Certainty

Non-obviousness standards based upon less objective criteria have been tried by the courts without success in the past. For example, subjective tests such as whether the inventive combination produced a "new or different function" that resulted from a "flash of genius" or that achieved "an unexpected result" or a "synergistic result" have been used. *See, e.g., Funk Bros. Seed Co. v. Kalo Innoculant Co.*, 333 U.S. 127, 76 USPQ 280 (1948) (where a patent for the combination of multiple bacteria strains that inoculated multiple types of legumes was held invalid because it "was not the product of invention" despite an established showing of commercial success and long-felt need) *and Great Atl. and Pac. Tea Co. v. Supermarket Equip. Corp.*, 340 U.S. 147, 87 USPQ 303 (where a patent for a combination of mechanical elements acknowledged as a "good idea" that produced "more striking" results was held invalid despite a showing of "commercial success" and a "long-felt want"). The Supreme Court has historically experimented with these tests for non-obviousness, but has definitively chosen to apply the three-pronged test of *Graham, supra.*

Application of these heightened tests would weaken the patent system. A stronger patent system allows for protection of worthy inventions regardless of the manner in which they have been created. In a weak patent system, freeloaders can reap the benefit provided by the innovators and investors in technology. A fundamental precept of a capitalistic society is that people should be able to profit from their innovation. A strong patent system is necessary to allow people to profit from research and development that leads to innovative products and processes.

3) Subjective Tests Shift the Burden of Going Forward and the Requirement that the Examiner Must Establish a *Prima Facie* Case

If a subjective test is adopted by the Court, Examiners in the U.S. Patent and Trademark Office will simply assert that an invention is obvious without performing a thorough analysis of all the evidence and fact-based criteria that must be considered when making a non-obviousness determination. For example, if a synergy test is adopted as the standard for obviousness, the Examiner will simply argue that, absent a showing by applicant of unexpected results, a combination of references showing the existence of all claimed elements *per se* renders the claimed invention obvious. The burden of going forward with the evidence of non-obviousness will then shift to the patent applicant to demonstrate non-obviousness through submission of evidence of secondary or objective indicia of non-obviousness considerations. The applicant is then faced with trying to prove a negative, i.e., that the Examiner's conclusion based on a presumption of obviousness is wrong. Applicants will be forced to introduce evidence to counter the Examiner's bare conclusion that is based on a presumption of obviousness without a complete analysis of all factual underpinnings that are required to be evaluated to ascertain whether the claimed invention would have been non-obvious based on the statute and Supreme Court law. Objectivity in the determination of obviousness disappears when the courts and the U.S. Patent Office are left with the prospect of simply balancing conclusions without considering all the underlying facts that need to be evaluated to support such conclusions. This is precisely why the standards used prior to adoption of the objective test of showing a suggestion, teaching or motivation to combine references failed. Opinions that do not consider and weigh all relevant facts will always vary, but application of an

objective test that is based upon evidence provides a structure and process for considering obviousness with a high degree of certainty.

A shift in the burden of going forward with evidence of non-obviousness would also slow the process of technical development in the U.S. It was recognized by the writers of the U.S. Constitution that a patent system should exist for the purposes of "promoting the progress of science and the useful arts." U.S. Const. art. I, § 8. The writers of the U.S. Constitution understood that technological innovation for the benefit of society could be advanced through the Contract Theory of Patents. The Contract Theory of Patents is based upon the concept that the publication and dissemination of technical information for the benefit of society to learn from and improve upon can best occur by providing exclusive rights to inventors for a period of time if the inventors disclose their inventions in patents, rather than keeping their inventions secret. The disclosure of inventions allows others to understand these advancements so that additional improvements can be made that are based upon the inventions that are disclosed in the patents. The current evidentiary and procedural rules that have been established by the courts and the U.S. Patent and Trademark Office, such as the requirement for establishing a *prima facie* case of obviousness encourage early disclosure of inventions and provide an objective standard for patentability that we, as experienced practicing patent attorneys, have observed as clearly promoting "the progress of science and the useful arts" and fulfilling the Contract Theory of Patents.

4) A More Stringent Standard of Patentability Will Not Result in Fewer Unworthy Patents.

There are many reasons for the issuance of unworthy patents that this brief does not attempt to address. From our observations, those reasons are generally not related to the

current standard for patentability, but rather, primarily from a failure to properly apply the suggestion, teaching, or motivation test and other tests for determining non-obviousness. A well developed and defined standard that uses objective evidence, rather than hindsight, allows applicants, the U.S. Patent and Trademark Office, and the courts to objectively determine patentability. In our experience, the fewest number of unworthy patents exist under such a well-defined system, such as our current system, if the objective criteria are properly applied. Certainly, under our current objective standard, unworthy patents can be readily identified.

B. The Effect That a Weak Patent System Would Have on Innovation in the U.S. as a Result of the Adoption Of An Uncertain Standard or a Heightened Standard for Determining Non-Obviousness

1) The Strong U.S. Patent System Fuels Innovation in the U.S.

In our experience, the U.S. patent system has become substantially stronger in the past 25 years because patents are no longer being held invalid for obviousness on a routine basis as a result of the application of a standard that is either too strict or too subjective, as was the case for decisions from the various federal circuit courts of appeal prior to the formation of the Court of Appeals for the Federal Circuit. As practicing patent attorneys, we have observed a great degree of interest by both small companies and large corporations in obtaining patent protection, which has grown geometrically since the establishment of the Court of Appeals for the Federal Circuit. A belief by inventors, as well as business people, that a strong patent system exists in the U.S., has resulted in a large increase in the filing of patent applications. The establishment of the Court of

Appeals for the Federal Circuit, which has applied a uniform and objective standard for determining obviousness that is not too strict, is a significant reason why this beneficial result has occurred. The filing of patent applications has increased and the resultant disclosure of technology to the public has further spurred innovation. Adoption of a less certain standard or a stricter standard would adversely impact the very beneficial results that the patent system has produced in the last 25 years.

2) Investment Money to Develop Inventions Has Been Available as a Result of a Strong Patent System

In our experience, money to develop inventions has primarily been provided by private investment funds, rather than government funding. This has been especially true in the biotechnology industry, as well as most emerging high technology industries. There are currently many private investors that are willing to risk money on the development of technology that has been patented, or has some assurance of being patented, under our current objective and predictable standard. These private investors perform careful risk/reward analyses before investing. A change in the standard of obviousness that provides a less certain standard or a more stringent standard would alter that risk/reward analyses and substantially less investment would occur in the development of technology.

3) Innovation Will Suffer From a Weaker Patent System

If businesses cannot be reasonably advised as to the certainty of obtaining or maintaining a valid patent because a less certain standard is adopted by the Court, innovation will clearly suffer. Similarly, if businesses cannot be assured of

obtaining a patent because a stricter standard of patentability is adopted, patent applications will not be filed. In both cases, companies will attempt to maintain their inventions as trade secrets, slowing the disclosure of technology and defeating the very purpose of the patent system, i.e., to encourage inventors to disclose inventions. Large companies will not file patent applications and disclose newly developed technology, but rather, will use their market power to steamroll over small companies that try to compete. Without a strong patent system, small companies have little chance of success.

C. Disruption Will Be Created by a Change in the Standard of Obviousness

As a practical matter, a change in a standard of patentability will alter the economic structure of a substantial number of license agreements, including cross-license agreements between large companies. Business strategies will have to be altered as a result of the necessary modification of patentability and infringement opinions. The investment of capital in new technology will have to be reassessed, which has a potentially large adverse effect on the U.S. economy. The scope of the adverse effect of such a change is uncertain, but would be clearly far reaching with respect to both the U.S. patent system and the U.S. economy.

IV. Conclusion

U.S. patent law has been carefully developed by trial and error over approximately the past 200 years. The U.S. has the best and strongest patent system in the world. One of the reasons why the U.S. patent system is the best is that it relies upon objective evidence of patentability. Objective evidence of patentability results in predictability and certainty. A change to a more stringent standard of patentability will create a weaker patent system that will

slow innovation. Adoption of either a less certain standard or a more stringent standard of patentability will cause legal and economic disruption, as well as a disruption in the economic structure of innovation and new product development in the United States. A new standard of patentability will not result in fewer unworthy patents since the current standard is not the reason why unworthy patents exist. The fewest number of unworthy patents exist in an objective, well defined system for determining patentability, such as our current system, which should not be changed.

Respectfully submitted,

CHRISTOPHER R. BENSON
2705 Pearce Road
Austin, TX 78730
(512) 527-9103

STEPHEN G. KUNIN
OBLON, SPIVAK,
MCCLELLAND, MAIER
& NEUSTADT, P.C.
1940 Duke Street
Alexandria, VA 22314
(703) 413-3000

WILLIAM P. O'MEARA
KLAAS, LAW, O'MEARA
& MALKIN, P.C.
1999 Broadway, Suite 2225
Denver, CO 80202
(303) 298-9888

WILLIAM W. COCHRAN
Counsel of Record
SAMUEL M. FREUND
JAMES R. YOUNG
CHRISTOPHER P. WHITHAM
COCHRAN FREUND
& YOUNG LLC
2026 Caribou Drive
Fort Collins, CO 80525
(970) 492-1100

551C

(12)

No. 04-1350

Supreme Court, U.S.
FILED
AUG 2 2 2006
OFFICE OF THE CLERK

IN THE

Supreme Court of the United States

KSR INTERNATIONAL CO.,
Petitioner,

v.

TELEFLEX INC. AND TECHNOLOGY HOLDING CO.,
Respondents.

On Writ of Certiorari to the United States Court of Appeals for the Federal Circuit

BRIEF OF *AMICUS CURIAE* THE PROGRESS & FREEDOM FOUNDATION IN SUPPORT OF THE PETITIONER

JAMES V. DELONG *
SOLVEIG SINGLETON
THE PROGRESS & FREEDOM FOUNDATION
1444 Eye St., NW
Suite 500
Washington, DC 20005
(202) 289-8928

* Counsel of Record

August 22, 2006

WILSON-EPES PRINTING CO., INC. – (202) 789-0096 – WASHINGTON, D. C. 20001

TABLE OF CONTENTS

	Page
TABLE OF AUTHORITIES	ii
INTEREST OF *AMICUS CURIAE*	1
SUMMARY OF ARGUMENT	3
ARGUMENT	4
I. THE GROWING IMPORTANCE OF INTELLECTUAL PROPERTY, AND THE GROWING UNEASE ABOUT PATENT QUALITY	4
II. THE STANDARD APPLIED BY THE FEDERAL CIRCUIT CAUSES HARM	8
III. INSTITUTIONAL CONSIDERATIONS	12
CONCLUSION	17

TABLE OF AUTHORITIES

CASES — Page

Atlantic Works v. Brady 107 U.S. 192 (1882)..... 3, 18
In re Dembiczak, 175 F. 3d 994 (Fed. Cir. 1999).. 11, 12
Environmental. Designs, Ltd. v. Union Oil Co., 713 F.2d 693 (Fed. Cir. 1983)..... 12
Graham v. John Deere Co., 383 U.S. 1 (1966)..... 9
Great A. & P. Tea Co. v. Supermarket Corp., 340 U.S. 147 (1950)..... 9
Haberman v. Jackel International [1999] F.S.R. 683 (Ch.)..... 16
In re Kahn, 441 F.3d 977 (Fed. Cir. 2006)..... 12
In re Lee, 277 F.3d 1338 (Fed. Cir. 2002)..... 11
Loctite Corp. v. Ultraseal Ltd, 781 F.2d 861 (Fed. Cir. 1985)..... 12
Ranbaxy UK Ltd v. Warner-Lambert Co [2006] EWCA Civ. 876..... 17
Ruiz v. A.B. Chance Co., 234 F.3d 654 (Fed. Cir. 2000)..... 12
Sakraida v. Ag Pro, Inc., 425 U.S. 273 (1976)..... 9
Wildey and Whites v. Freeman, [1931] 48 R.P.C. 405..... 16
Windsurfing International v. Tabur Marine Ltd., [1985] R.P.C. 59 (CA 1984)..... 17
In re Zurko, 258 F.3d 1379 (Fed. Cir. 2001)..... 11

U.S. PATENT AND TRADEMARK OFFICE MATERIALS

U.S. Patent No. 6,368,227, Method of Swinging on a Swing. Filed Nov. 17, 2000; Granted April 9, 2002 (Steven Olson)..... 10
U.S. Patent and Trademark Office, Official Gazette Notices, July 2, 2002..... 10

TABLE OF AUTHORITIES—Continued

Page

Reexamination Certificate (4803rd), U. S. Patent No. 6,368,227 (Olson). Issued: July 1, 2003 10

GOVERNMENT REPORTS

Federal Trade Commission, *To Promote Innovation: The Proper Balance of Competition and Patent Law and Policy* (Oct. 2003) 6, 9

National Research Council, *A Patent System for the 21st Century* (2004) (Stephen A. Merrill, Richard C. Levin, & Mark B. Myers (eds)) (Report of the Committee on Intellectual Property Rights in the Knowledge-Based Economy)..... 7, 8

ARTICLES AND BOOKS

Robert Axelrod, *The Evolution of Cooperation* (Basic Books 1984) 5

J. Bradford DeLong & Lawrence H. Summers, "The New Economy: Background, Historical Perspective, Questions, and Speculations," *Federal Reserve Bank of Kansas City Economic Review* 29 (Fourth Quarter 2001) 5

James V. DeLong, "New Wine for a New Bottle: Judicial Review in the Regulatory State," 72 *Va. L. Rev.* 399 (1986) 15

Adam B. Jaffe & Josh Lerner, *Innovation and Its Discontents: How Our Broken Patent System is Endangering Innovation and Progress, and What To Do About It* (Princeton Univ. Press 2004)..... 8

Joseph P. Meara, "Note: Just Who Is the Person Having Ordinary Skill in the Art? Patent Law's Mysterious Personage," 77 *Wash. L. Rev.* 267 (2002)..... 16

TABLE OF AUTHORITIES—Continued

Page

James D. Miller, *Game Theory at Work* (McGraw-Hill 2003) 5

William Poundstone, *Prisoner's Dilemma* (Doubleday 1992) 5

Steven W. Usselman, *Regulating Railroad Innovation: Business, Technology, and Politics in America, 1840-1920* (Cambridge Univ. Press 2002) 18

Anita Varma & David Abraham, "DNA Is Different: Legal Obviousness and the Balance Between Biotech Inventors and the Market," 9 *Harv. J. Law & Technology* 53 (1996) 16

MISCELLANEOUS

Richard C. Levin (President, Yale University) & Mark B. Myers, (Wharton School, University of Pennsylvania), Statement Before the Subcommittee on Intellectual Property, Senate Committee on the Judiciary, *Hearings on Perspectives on Patents* (April 25, 2005) 7

Brief of *Amicus Curiae* Progress and Freedom Foundation in Support of Petitioner, *Metro-Goldwyn-Mayer Studios v. Grokster, Ltd.*, __ U.S.__ (Jan. 24, 2005) (No. 04-480). 2

David Streitfeld, "Note: This Headline is Patented," *Chicago Tribune* (Online Edition), Feb. 7, 2003 (unpaginated) <http://www.Chicagotribune.com/technology/local/chi-302,0,7319176.story> 11

IN THE

Supreme Court of the United States

No. 04-1350

KSR INTERNATIONAL CO.,
Petitioner,

v.

TELEFLEX INC. AND TECHNOLOGY HOLDING CO.,
Respondents.

On Writ of Certiorari to the United States Court of Appeals for the Federal Circuit

BRIEF OF *AMICUS CURIAE* THE PROGRESS & FREEDOM FOUNDATION IN SUPPORT OF THE PETITIONER

INTEREST OF *AMICUS CURIAE*

The Progress & Freedom Foundation (PFF) is a non-profit research and educational institution, as defined by the Code of the Internal Revenue Service, 26 U.S.C. § 501(c)(3).[1] The Foundation's principal mission is to study the impact of the digital and electronic revolution and its implications for public policy.

[1] The parties to this proceeding have filed with the Clerk of Court blanket consents to all *amicus curiae* briefs. Pursuant to Rule 37.6, *amicus curiae* states that no counsel for a party authored this brief in whole or in part, and no person other then the *amicus curiae*, its members, or its counsel made a monetary contribution to the preparation or submission of this brief.

PFF's interest in this case stems from the work of an internal project called IPCentral.Info (*a.k.a.*, the Center for the Study of Digital Property (CSDP)), which is dedicated to developing and advancing market-based, property-rights-oriented approaches to issues presented by technological change. This focus makes us strong supporters of property rights in intellectual creations. For example, we filed briefs with this Court in support of the content company petitioners in the case of *Metro-Goldwyn-Mayer Studios v. Grokster, Ltd.*[2]

In furtherance of the mission, we maintain a website, *IPcentral.Info*,[3] which contains links to a variety of materials on intellectual property issues, including written materials, a weblog, and links to other sites with related interests. Staff members prepare or commission analyses of important intellectual property issues. We have an Academic Advisory Council composed of distinguished professors. Staff members also appear before congressional committees, interact regularly with journalists, academicians, industry representatives, and government officials, and file *amicus* briefs.

PFF's interest in this case stems from the work of our scholars on the interaction of technology with the legal institution of intellectual property. Intellectual property rights, are indispensable to continued innovation and to the health of competitive markets. However, precisely because of our fierce insistence on their importance, we are also adamant that the patent system must not overreach by trying to protect too much. Especially in a time when technology is progressing rapidly, extending the patent system to cover advances that are obvious to all who are skilled in the art puts

---

[2] Brief of *Amicus Curiae* Progress and Freedom Foundation in Support of Petitioner, Metro-Goldwyn-Mayer Studios v. Grokster, Ltd., __U.S.__ (Jan. 24, 2005) (No. 04-480).

[3] http://www.ipcentral.info

glue rather than grease into the gears of innovation. It rewards those who "make it their business to watch the advancing wave of improvement, and gather its foam . . . without contributing anything to the real advancement of the arts."[4]

The parties will brief the technical aspects of this case concerning the prior art relating to the invention at issue, the split between the Federal Circuit and other Circuits, and the Federal Circuit's departure from this Court's patent precedents. PFF's participation is intended to help the Court assess the broader policy issues.

SUMMARY OF ARGUMENT

Intellectual property, particularly in the form of patents, is an important source of wealth and a major contributor to U.S, and world, prosperity. Because of this importance, which is growing, there is constant effort by participants to patent anything that can make any pretense of a claim to meet the statutory criteria.

The result is an increasing unease about the quality of patents being granted, as has been noted by several significant recent studies, an unease that is focusing upon the application of the "nonobviousness" criteria for patentability.

The Federal Circuit insists that to reject a patent application as "obvious," a patent examiner must find in prior art a concrete "teaching, suggestion, or motivation" for combining previous elements into the invention for which the patent is claimed. The application of common sense, or reasoning by analogy from other fields, or noting that some ideas are too common to be written down, are largely ruled out. The result is a one-way ratchet in favor of granting patents, which only encourages trivial patents that actually retard innovation and competition.

---

[4] *Atlantic Works v. Brady*, 107 U.S. 192, 199-200 (1882) (Mr. Justice Bradley).

There is a fair consensus among patent scholars (though not necessarily practitioners) that the current standard of non-obviousness errs on the side of patent grants. There is likewise a consensus (emphasized by practitioners) that the difficulty the standard was designed to solve is real—that is, the problem of hindsight, which can make almost any technical advance appear obvious in retrospect. Practitioners fear that abandoning the Federal Circuit's requirement that an examiner point to specific prior writing on the invention will provide an incentive for examiners to clear their desks by stamping "obvious" on the file and tossing it into the out-tray. They are also troubled by the difficulty of articulating an alternative standard, especially when there is no clear consensus about the best solution.

These fears of hindsight and subjectivity deserve respect, because the seriousness of the problems must be acknowledged. But the Federal Circuit's solution errs in assuming that the risk must be controlled by Procrustean legal doctrine. Legal doctrine can only do so much, and the price imposed by extending it beyond its competence is too high in terms of "bad patents" granted. Risks of subjectivity can be better controlled by available administrative mechanisms, such as revised PTO incentive structures or multi-member review panels, and by district courts bringing to bear additional doctrines, such as the secondary criteria of the *John Deere* case.

ARGUMENT

I. THE GROWING IMPORTANCE OF INTELLECTUAL PROPERTY, AND THE GROWING UNEASE ABOUT PATENT QUALITY

On the surface, this case involves a simple product, the automobile accelerator pedal. But this product, like so many these days, has been revolutionized, because what was once a straightforward mechanical linkage is now a hybrid that mar-

ries the mechanical act of pressing a pedal to electronic devices composed mainly of computer chips and software code.

The pedal exemplifies the great shift in the nature of economic value that has occurred over the past few decades. As two prominent economic thinkers recently noted:[5]

> We used to live in an economy in which the canonical source of value was an ingot of iron, a barrel of oil or a bushel of wheat. . . . We are moving to an economy in which the canonical source of value is a gene sequence, a line of computer code, or a logo. As Chairman Greenspan [citation omitted] has often emphasized, in such a world, goods are increasingly valued not for their physical mass or other physical properties but for weightless ideas . . . .

The authors point out the change from the basic industrial economy:

> Back in the Gilded Age intellectual property as such was not such an important factor. Industrial success was based on knowledge, but on knowledge crystalized in dedicated capital. Many people knew organic chemistry. Few companies—those that had made massive investments—could make organic chemicals.

This evolution in the locus of value creates strong incentives for economic actors to push the boundaries of intellectual property protection out as far as possible.

Like so much else in economic and political life, there is a Prisoner's Dilemma problem.[6] Everyone is better off if intellectual property is defined as including only genuine ad-

---

[5] J. Bradford DeLong & Lawrence H. Summers, "The New Economy: Background, Historical Perspective, Questions, and Speculations," Federal Reserve Bank of Kansas City Economic Review 29, 35 (Fourth Quarter 2001).

[6] See, *e.g.*, William Poundstone, *Prisoner's Dilemma* (Doubleday 1992); Robert Axelrod, *The Evolution of Cooperation* (Basic Books 1984); James D. Miller, *Game Theory at Work* (McGraw-Hill 2003).

vances, but each individual is better off if everyone else is limited while he himself manages to push dubious patents through the system. The logical outcome of such a set of incentives is constant pressure on the United States Patent and Trademark Office (USPTO) in the form of applications to patent every advance that can make any possible claim of meeting the criteria for patentability.

Indeed, the current general level of concern about the quality of patents is high, with particular focus on the "non-obviousness" standard.

A recent Federal Trade Commission (FTC) report devoted extensive attention to the issue of "questionable patents."[7] It recommended specifically that legal standards used to evaluate whether a patent is "obvious" should be "tighten[ed]," and it criticized the test imposed on the field by the Federal Circuit.[8]

A study by the National Research Council (NRC) expressed similar fears:

> [Several factors] lead the committee to conclude that there are reasons to be concerned about both the courts' interpretation of the substantive patent standards,

---

[7] Federal Trade Commission, *To Promote Innovation: The Proper Balance of Competition and Patent Law and Policy* (Oct. 2003), *passim*.

[8] Id at pp. 10-12. The FTC cited the statement of a witness who noted that "his company's engineers . . . 'every day' independently invent things that have been deemed nonobvious." The FTC adds that "Requiring concrete suggestions or motivations beyond those actually needed by a person of ordinary skill in the art, and failing to give weight to suggestions implicit from the prior art as a whole, suggestions from the nature of the problem to be solved, and the ability and knowledge of one of ordinary skill in the art, errs on the side of issuing patents on obvious inventions and is likely to be unnecessarily detrimental to competition." Chapter 4 at p. 15.

> *particularly non-obviousness*, and USPTO's application of the standards in examination.[9] [Emphasis added.]

The Co-Chairs of this NRC study recently repeated this fear to a Senate subcommittee:

> The NRC committee supports seven steps to ensure the vitality and improve the functioning of the patent system:
>
> . . . .
>
> 2) Reinvigorate the nonobviousness standard. The requirement that to qualify for a patent an invention cannot be obvious to a person of ordinary skill in the art should be assiduously observed. In an area such as business methods, where the common general knowledge of practitioners is not fully described in published literature likely to be consulted by patent examiners, another method of determining the state of knowledge needs to be employed.[10]

In reaching its conclusion, the NRC study relied on a rising tide of scholarly opinion:

> [A] number of legal scholars view the evolution of the law over the last generation as reducing the size of the step required for patentability under the non-obviousness

---

[9] National Research Council, *A Patent System for the 21st Century* (2004) (Stephen A. Merrill, Richard C. Levin, & Mark B. Myers (eds)) (report of the Committee on Intellectual Property Rights in the Knowledge-Based Economy), p. 63. [Hereafter "NRC Report."]

[10] Richard C. Levin, President, Yale Univ., & Mark B. Myers, Wharton School, Univ. of Pennsylvania, Statement Before the Subcommittee on Intellectual Property, Senate Committee on the Judiciary, *Hearings on Perspectives on Patents* (April 25, 2005).

> standard and as allowing the issuance of patents on obvious inventions.[11]

Leading economics and business scholars concur:

> As a result of legal and administrative changes made between 1982 and 1990, the PTO has become so overtaxed, and its incentives have become so skewed toward granting patents, that the tests for novelty and non-obviousness that are supposed to ensure that the patent monopoly is granted only to true inventors have become largely non-operative.[12]

II. THE STANDARD APPLIED BY THE FEDERAL CIRCUIT CAUSES HARM

That the assessment of obviousness becomes contentious during a period of rapid technological change should not surprise. Human minds strike sparks from each other, and each innovation adds a new element for the creative to consider, and creates possible combinations with existing technologies. Such combinations are, by definition, novel. The question for patent law is whether such a combination is nonobvious, whether it is sufficiently beyond the routine competencies of practitioners in the field as to justify turning it into a property right.

In making this determination, two types of error are possible. One is that a patent will be denied that should have been granted; the other, that a patent is granted when anyone adequately skilled in the field, confronted with the problem solved by the novelty, would have come up with the same idea.

---

[11] NRC Report at 61 [citing six articles].

[12] Adam B. Jaffe & Josh Lerner, *Innovation and Its Discontents: How Our Broken Patent System is Endangering Innovation and Progress, and What To Do About It* (Princeton, 2004), pp. 34-35.

There is a gray area, where the outcome is not completely certain. It is fair to say that the Federal Circuit's test, which requires, in essence, documented and precise proof of "teaching-suggestion-motivation," defines the lower bound of that gray area. That is, any novelty that fails this test is obvious within the meaning of the patent law, beyond doubt, because prior practitioners already pointed it out.

However, some innovations might still be properly classified as obvious within the meaning of the statute even though prior writers had *not* pointed them out with precision, as this Court said repeatedly in its line of opinions starting with *Graham v. John Deere*[13] and ending with *Sakraida*.[14] The fact that the solution, in its exact form, had not been foreshadowed by prior writers may be indicative, but it is not conclusive.

> A patent for a combination which only unites old elements with no change in their respective functions . . . obviously withdraws what already is known into the field of its monopoly and diminishes the resources available to skillful men . . . .[15]

Indeed, critics of the Federal Circuit standard note that in many fields no one may bother to publish the obvious; in others, such as software or business methods, there may be no strongly established publication culture, or long history of formal publications.[16] In yet others, the potential to adapt a

---

[13] *Graham v. John Deere Co.*, 383 U.S. 1 (1966).

[14] *Sakraida v. Ag Pro, Inc.*, 425 U.S. 273 (1976).

[15] *Sakraida* at 281, quoting *Great A. & P. Tea Co. v. Supermarket Corp.*, 340 U.S. 147, 152 (1950) (ellipses in *Sakraida*).

[16] Federal Trade Commission Report, Chapter 4 p. 40 (describing factors complicating the nonobviousness inquiry for business methods, including "the absence of a drive to publish within business method fields (unlike, for example, the sciences), and the fact that commercial practices in question often only exist in the 'heads of business person.'"); Chapter 5 p. 7 (noting testimony that prior art problems are particularly hard to

practice common in one area to new circumstances may be obvious, but unwritten. For example, it would be difficult to argue that it was "nonobvious" to move the age-old practice of the auction from the warehouse to the Internet, but at some point in time this was not written down in any formal study.

The Federal Circuit's test says, in essence, that all doubtful cases, all cases in the gray area, will be decided in favor of patentability. In other words, it has decided to run zero risk of rejecting a meritorious claim even at the cost of accepting numerous non-meritorious patents.

This is not sensible doctrine. Nor is it in accord with the statutory language or the precedents of this Court.

The defects of such a doctrine may well be illustrated by the notorious Patent 6,368,227, "Method of Swinging on a Swing,"[17] obtained by a five-year old whose parent happened to be a patent lawyer. It is also called the "sideways swinging" patent, because that is what it covers—the idea that a swing can be made to move sideways as well as back and forth by pulling on the chains in a particular way.

The Patent Commissioner ordered a re-examination of the '227 patent on May 21, 2002,[18] and ultimately the examiner found sufficient prior art in patents granted decades earlier to result in the invalidation of the swing patent.[19] But the case ought never to have gotten so far; scarce patent-examiner hours and public resources had to be expended to officially recognize the obvious. The difficulty the patent office faced

---

discover "in fields characterized by limited or abstract patent disclosures or lacking a culture favoring non-patent publication.")

[17] United States Patent No. 6,368,227, Method of Swinging on a Swing. Filed Nov. 17, 2000; Granted April 9, 2002 (Steven Olson).

[18] USPTO, Official Gazette Notices, July 2, 2002.

[19] Reexamination Certificate (4803rd), Method of Swinging on a Swing. Issued July 1, 2003.

resulted from the fact that the Federal Circuit's standard forbade the examiners to take notice of what, literally, any child would know. A newspaper report on the matter said, "The patent office is searching for documented proof that children have always powered their swings by pulling on the chains. Then, and only then, will it kill the patent as quietly as possible."[20] The office had difficulty finding *written* proof of something known to all, and, if it had been unable to find such evidence, then under the Federal Circuit test the patent would stand. "[D]eficiencies of the cited references cannot be remedied by the Board's general conclusions about what is 'basic knowledge' or 'common sense."[21] "'Common knowledge and common sense,' even if assumed to derive from the agency's expertise, do not substitute for authority when the law requires authority."[22]

In the swing patent case, ultimately, the PTO eventually arrived at the sensible result. But the Federal Circuit decisions present an obstacle to the office's doing so in a significant number of cases. For example, in 1999, the Federal Circuit reversed the PTO's rejection of a patent application for orange trash bags with jack-o-lantern faces.[23] A prior art search had turned up instructions for a children's craft project involving the drawing of pumpkin faces on large orange bags.

---

[20] David Streitfeld, "Note: This Headline is Patented," *Chicago Tribune* (Online Edition), Feb. 7, 2003 (unpaginated) < http://www.chicagotribune.com/technology/local/chi-0302,0,7319176.story>.

[21] *In re Zurko*, 258 F.3d 1379, 1385 (Fed. Cir. 2001).

[22] *In re Lee*, 277 F.3d 1338, 1345 (Fed. Cir.. 2002). The writer of the news story cited in Note 20 commented that the patent application was "elegantly written" and "obviously tongue-in-cheek" but that "the examiner didn't get the joke." The authors of this brief beg to differ; it is likely that the examiner got the joke quite nicely, and decided to play a trick of his/her own on those who had crafted the rules forcing the issuance of such a patent.

[23] *In re Dembiczak*, 175 F. 3d 994 (Fed. Cir. 1999).

But this was not sufficient for the Federal Circuit, because the instructions referred to paper bags, not to trash bags.

III. INSTITUTIONAL CONSIDERATIONS

Recognizing the truth that "virtually all [inventions] are combinations of old elements,"[24] the Federal Circuit places immense importance on avoiding "the hindsight trap,"[25] "the insidious effect of a hindsight syndrome"[26] and "the tempting but forbidden zone of hindsight."[27] It relies on the ability of "the 'motivation-suggestion-teaching' requirement [to] protect[] against the entry of hindsight into the obviousness analysis."[28]

This concern over hindsight is valid and important. One can generalize it even further; in dealing with any large bureaucracy, any sensible person must be concerned about the role of subjective judgments and the possibility of decisions by individual whim. Avoiding such is a good working definition of "the rule of law."

The USPTO is indeed a large bureaucracy. It must deal with some difficult problems, and is under extraordinary pressures. It has personnel problems, management issues, funding issues, and problems with morale. Attempts to improve examiner access to prior art using technology have made frustratingly little progress.

Even if all these problems were solved, a number of factors are probably inherent in the process, in addition to the

---

[24] *Environmental Designs, Ltd. v. Union Oil Co.*, 713 F.2d 693, 698 (Fed. Cir. 1983).

[25] *In re Dembiczak*, 175 F.3d 994, 999 (Fed. Cir. 1999).

[26] *Ruiz v. A.B. Chance Co.*, 234 F.3d 654, 664 (Fed. Cir. 2000).

[27] *Loctite Corp. v. Ultraseal Ltd*, 781 F.2d 861, 873 (Fed. Cir. 1985).

[28] *In re Kahn*, 441 F.3d 977, 985 (Fed. Cir. 2006).

tendency of even significant advances to appear "obvious" in hindsight:

> The growing number of patents, stemming from the increasing significance of intellectual property and intellectual capital to the economy, and the time pressure this places on patent examiners.
>
> The complexity of the technologies involved in many of the most important areas of innovation, and the pressures this places on the system for recruiting and training examiners.
>
> The limitations on examiner consultations with outside experts to determine "ordinary skill in the art," due to the employment of those experts by competitors of the patent claimant, and the general need for confidentiality and avoidance of conflicts of interest.
>
> The *ex parte* nature of the examination process.

Given all these factors, concern about subjective judgment is fully justified, and an urge to provide examiners with a template that will eliminate all role for subjective judgment concerning nonobviousness is strong. The patent bar, engaged in the business of filing claims and aware of the inherent uncertainties of the examination process, may well favor rules designed to make the job of the examiner as automatic as possible so that they can compensate for those limitations in their filings and procedures. The legal mind tends to assume that any problem can be cured by one more doctrine and another round of procedures.

In essence, where the Federal Circuit has gone wrong is in placing too great a burden on an articulation of the nonobviousness doctrine as *the* solution to the problem of controlling the exercise of subjective judgment and hindsight bias in the huge organization that is the USPTO. This temptation must be resisted, because giving in to it represents an effort to force a legal test to perform a quality control function that it is ill-suited to perform. It is, in the classic

joke, the equivalent of searching under the street light because the light is better there.

In reality, there *is* a subjective element in applying the test. No articulation of the standard can eliminate it completely, and the effort to find such an articulation has led to the current situation.

But adopting the correct standard does not require that USPTO or the courts give in to subjective whim, because there are administrative mechanisms that can be used to make the exercise of subjective judgment fair and reasonably consistent over time.

For example, USPTO could adopt the current Federal Circuit test as a first cut, because it does indeed represent a crucial benchmark. Any invention which fails the "teaching-suggestion-motivation" test is clearly not patentable. But this need not end the inquiry. If the examiner thinks he/she has a special case in which this test does not capture the reality of the situation, perhaps the matter could be referred to a multi-person review committee, thus eliminating the influence of a single examiner's whim. Or perhaps boards of outside experts could be established, or community peer review processes conducted over the Internet.

Another possibility is that the incentive system for patent examiners might need correction. Some observers fear that a more rigorous application of the standard will tempt an examiner to stamp "rejected" on an applications just to clear his desk and earn a point under the USPTO personnel system. Or, because examiners are awarded one point for the first office action, a second for the second office action, and no more, they have an incentive to start by rejecting patents for no good reason. Then the "second action" can be to grant the patent, earning, in effect, two points for one review. If the first action is acceptance, the examiner gets only a single point.

The point is that the USPTO can devise administrative solutions to address any problems created by a less rigid, but more legally-valid, approach to determining nonobviousness. The Federal Circuit might then alleviate the concern about the danger of hindsight by assessing the adequacy of the agency's "internal gyroscope":[29]

> [Reviewing] courts might profitably consider expanding their purview to include an evaluation of the roles and adequacy of other mechanisms of control. A court's role under this conception would be to ensure that somebody somewhere in the system performed adequate quality control and to recognize that the somebody need not necessarily be a court. . . . [It may be] the agency's internal processes.

If internal USPTO processes are the first line of defense against the possibility of whim, the second line is the U.S. district court, which is a crucial part of the quality control process. Realistically, there will be errors at the USPTO, given the volumes with which it must deal, and the time pressures. Also, since examination is an *ex parte* process, the examiners will never be exposed to all the arguments that opponents will muster when properly motivated.

Unfortunately for inventors, few patents ever lead to anything economically viable. Most are stuffed in a file somewhere, or serve primarily to adorn resumes.

The patents that go to litigation are those that show economic promise, so there are incentives to elicit reasonable efforts to support and refute them.

A district court has available a number of tools to ensure that a corrected nonobviousness standard is properly applied.

---

[29] James V. DeLong, "New Wine for a New Bottle: Judicial Review in the Regulatory State," 72 *Va. L. Rev.* 399, 417-18 (1986).

It can appoint an expert witness to aid in its determinations.[30] It can take into account the timing of the invention, the pace of change in the industry, the complexity of the technology, and other sector-specific factors.[31] It can look at such secondary factors as "teaching away" from the invention, the satisfaction of a long-felt need, and the invention's role in the success of the product in the market.[32] It can demand that the PTO articulate its reasoning in a convincing way, explaining a conclusion of nonobviousness that is reached in the absence of a specific teaching, suggestion, or motivation.

The experience of foreign nations could be incorporated. While statutory differences preclude automatic transfer of doctrines, perhaps U.S. jurisprudence has room for "the skilled but unimaginative technician,"[33] a concept that could

---

[30]Joseph P. Meara, "Note: Just Who Is the Person Having Ordinary Skill in the Art? Patent Law's Mysterious Personage," 77 *Wash. L. Rev.* 267 (2002).

[31] There is a limit to how far rules of thumb can serve given that, by definition, patent inquiries involve technology on the cutting edge and entirely new types of technology. Some rules of thumb, such as looking for "structural similarity" between the claimed invention and elements in prior art, are useful in chemical engineering generally but not in considering the biochemistry of DNA-protein relationships. Anita Varma & David Abraham, "DNA Is Different: Legal Obviousness and the Balance Between Biotech Inventors and the Market," 9 *Harv. J. Law & Technology* 53 (1996).

[32] There has been concern in the U.S. that the "commercial success" test requires no showing that the invention played a role in the success of the invention in the market. There is no reason that such a nexus could not be required, as it is has been in the UK for many years. See *Wildey and Whites v. Freeman*, [1931] 48 R.P.C. 405; *Haberman v. Jackel International* [1999] F.S.R. 683 (Ch.).

[33] Despite the differences between the U.S. and foreign jurisdictions, the approaches are similar enough to be instructive. In both the European Patent Office (EPO) and the United Kingdom, the law requires an "inventive step" for a patent to be granted. In the EPO, the patent examiner has discretion to determine obviousness by considering the problem faced by

serve as a useful preventive to any return to the old and rejected "flash of genius" approach.

In sum, rejecting the "teaching-suggestion-motivation" approach as the sole test will *not* lead to subjective chaos and untrammeled application of hindsight. It *will* lead to both administrative mechanisms and subsidiary legal doctrines that channel the exercise of judgment, and that create an improved patent system.

It is also reasonable to expect that bringing the nonobviousness doctrine back into line with this Court's cases will have a beneficial effect throughout the system. As noted earlier, once it becomes clear that patents of dubious validity are there for the taking, especially if they can be reaped simply by transferring well-known concepts from the bricks-and-mortar world to the Internet, then elementary Prisoner's Dilemma considerations dictate that participants in the patent system must increase their levels of patent-seeking. Removing one significant incentive for this behavior would be a useful step.

CONCLUSION

As the Petitioner requests, this Court should reinvigorate its line of cases stemming from *Graham v. Deere*. But it can also look further back for guidance. Historical antecedents for the current dilemma exist, and so do precedents for its resolution, that come from the late 19th century, as described

---

one of ordinary skill in the art, and then comparing the solutions in the prior art to the invention. In the UK, the courts consider whether the difference between what is known to a "skilled but unimaginative technician" and the claimed invention are steps that would have been obvious to the technician, when viewed without knowledge of the alleged invention. *Windsurfing Intl. v. Tabur Marine Ltd.*, [1985] R.P.C. 59, 73; (CA 1984); see also *Ranbaxy UK Ltd v. Warner-Lambert Co* [2006] EWCA Civ. 876 (comparing the UK and EPO approaches). But both the EPO and the UK courts face many of the same problems as in the U.S.

by railroad historian Steven W. Usselman.[34] Then, as now, explosive technological, financial, and institutional change created a climate of creativity. Then, as now, complaints of over-reaching and fears of gridlock abounded. Then, as now, the concept of "obviousness" was a puzzle—what was truly new and what was within the grasp of anyone skilled in the art, only some grasped it a little more quickly than others?

These issues were bitterly fought for years, and this Court came down on the side of common sense, in *Atlantic Works v. Brady*, per Mr. Justice Bradley:[35]

> The process of development in manufactures creates a constant demand for new appliances, which the skill of ordinary head-workmen and engineers is generally adequate to devise, and which, indeed, are the natural and proper outgrowth of such development. Each forward step prepares the way for the next, and each is usually taken by spontaneous trials and attempts in a hundred different places. To grant a single party a monopoly of every slight advance made, except where the exercise of invention, somewhat above ordinary mechanical or engineering skill, is distinctly shown, is unjust in principle and injurious in consequences.
>
> The design of the patent laws is to reward those who make some substantial discovery or invention, which adds to our knowledge and makes a step in advance in the useful arts. Such inventors are worthy of all favor. It was never the object of those laws to grant a monopoly for every trifling device, every shadow of a shade of an idea, which would naturally and spontaneously occur to any skilled mechanic or operator in the ordinary progress of manufactures. Such an indiscriminate creation of

---

[34] Steven W. Usselman, *Regulating Railroad Innovation: Business, Technology, and Politics in America, 1840-1920* (Cambridge Univ. Press 2002).

[35] 107 U.S. 192, 199-200 (1882)

> exclusive privileges tends rather to obstruct than to stimulate invention. It creates a class of speculative schemers who make it their business to watch the advancing wave of improvement, and gather its foam in the form of patented monopolies, which enable them to lay a heavy tax upon the industry of the country, without contributing anything to the real advancement of the arts. It embarrasses the honest pursuit of business with fears and apprehensions of concealed liens and unknown liabilities to lawsuits and vexatious accountings for profits made in good faith.

The effective application of the limitation that innovations are patentable only if they are nonobvious is vital to the effectiveness of the patent system in fulfilling its constitutional function of "promot[ing] the Progress of Science and useful Arts." The goal is to create incentives for inventors to solve problems (hence the utility requirement) in new ways, not to reward them for successfully gaming the system, for "watch[ing] the advancing wave of improvement, and gather[ing] its foam," in Justice Bradley's phrase.

To the extent that an invention is the "foam" on the "advancing wave," and within the probable ken of any skilled artisan who addresses a problem, the grant of a patent is not necessary to foster the discovery. It will, by definition, be found when the problem which it solves becomes important enough to engage serious attention. And there is no reason for the system to encourage investment in innovations that develop solutions that may or may not be needed in the future. If the problem is *not* sufficiently pressing to engage the present attention of those skilled in the art, then it shouldn't be the subject of inventive resources.

Nor, in such cases, is a patent necessary to fulfill another important function of the system: to encourage disclosure of a technology that would otherwise remain secret. Nothing that is the "foam" on the "advancing wave" will remain secret for long.

For the above-stated reasons, the Court should reverse the decision of the Federal Circuit Court of Appeals and reinstate the summary judgment granted by the district court.

Respectfully submitted,

JAMES V. DELONG *
SOLVEIG SINGLETON
THE PROGRESS & FREEDOM FOUNDATION
1444 Eye St., NW
Suite 500
Washington, DC 20005
(202) 289-8928

* Counsel of Record

August 22, 2006

190A

(35)

No. 04-1350

FILED
OCT 16 2006
SUPREME COURT, U.S.

In the
Supreme Court of the United States

KSR INTERNATIONAL CO.,
Petitioner,

v.

TELEFLEX, INC., *et al.*,
Respondents.

On Writ of Certiorari to the United States Court of Appeals for the Federal Circuit

BRIEF FOR *AMICI CURIAE* 3M CO., GENERAL ELECTRIC CO., PROCTER & GAMBLE CO., E.I. DUPONT DE NEMOURS AND CO., AND JOHNSON & JOHNSON IN SUPPORT OF RESPONDENTS

Q. TODD DICKINSON
V.P. and Chief IP Counsel
GENERAL ELECTRIC COMPANY
3135 Easton Turnpike
Fairfield, CT 06828

STEVEN W. MILLER
Chief IP Counsel and Associate General Counsel
THE PROCTER & GAMBLE COMPANY
6090 Center Hill Avenue
Cincinnati, OH 45224

PHILIP S. JOHNSON
Chief Patent Counsel
JOHNSON & JOHNSON
One Johnson & Johnson Plaza
New Brunswick, NJ 08533

GARY L. GRISWOLD
Counsel of Record
Staff V.P. and Chief IP Counsel
3M COMPANY
3M Center - P.O. Box 33427
St. Paul, MN 55144
(651) 733-8904

P. MICHAEL WALKER
Associate General Counsel and Chief IP Counsel
E.I. DU PONT DE NEMOURS AND COMPANY
DuPont Building
1007 Market Street
Wilmington, DE 19898

Attorneys for Amici Curiae

2006 – Bachman Legal Printing ■ (612) 339-9518 ■ 1-800-715-3582 ■ Fax (612) 337-8053

TABLE OF CONTENTS

Page

INTEREST OF THE *AMICI CURIAE* 1

SUMMARY OF THE ARGUMENT 3

ARGUMENT 6

I. *AMICI* SUPPORT THE FEDERAL CIRCUIT'S "MOTIVATION, SUGGESTION, OR TEACHING" TEST AS AN OBJECTIVE, YET FLEXIBLE, EVIDENTIARY STANDARD FOR THE INHERENTLY SUBJECTIVE OBVIOUSNESS INQUIRY 6

A. The Federal Circuit's Test Is Flexible In Theory and Practice 7

B. The "Motivation, Suggestion, or Teaching" Test Is An Evidentiary Standard That Fosters Predictability and Fairness 9

II. THE FEDERAL CIRCUIT'S FLEXIBLE "MOTIVATION, SUGGESTION, OR TEACHING" TEST IS ESSENTIAL TO THE PATENT SYSTEM 11

A. The Lack of Objective Evidentiary Standards To Guard Against Hindsight Bias in Obviousness Determinations Would Undermine the Patent Incentive System 12

B. Eliminating the "Motivation, Suggestion, or Teaching" Standard Would Unsettle Long-Held Expectations of *Amici* and Other Patent Owners .. 16

III. THE FEDERAL CIRCUIT'S "MOTIVATION, SUGGESTION, OR TEACHING" TEST LESSENS

TABLE OF CONTENTS (cont'd)

Page

HINDSIGHT BIAS, CONSISTENT WITH THE PATENT ACT AND THIS COURT'S PRECEDENT 18

A. The Federal Circuit's Test Implements the Statutory Language and Promotes Congress's Intent by Minimizing Hindsight Bias 19

B. The "Motivation, Suggestion, or Teaching" Test Is Consistent with This Court's Precedent 21

IV. THE PROPOSED ALTERNATIVE TESTS DO NOT COMPORT WITH THE PATENT STATUTE, PRECEDENT, OR PUBLIC POLICY 25

CONCLUSION 29

TABLE OF AUTHORITIES

Page(s)

Cases

Alza Corp. v. Mylan Labs.,
— F.3d —, 2006 WL 2556356 (Fed. Cir. Sept. 6, 2006) 7, 8, 9

Brown & Williamson Tobacco Corp. v. Philip Morris Inc.,
229 F.3d 1120 (Fed. Cir. 2000) 7

C.R. Bard, Inc. v. M3 Sys., Inc.,
157 F.3d 1340 (Fed. Cir. 1998) 9

Cross Med. Prods., Inc. v. Medtronic Sofamor Danek, Inc.,
424 F.3d 1293 (Fed. Cir. 2005) 8

Dennison Mfg. Co. v. Panduit Corp.,
475 U.S. 809-811 (1986) 11

Diamond Rubber Co. v. Consolidated Rubber Tire Co.,
220 U.S. 428 (1911) 22

Dystar Texilfarben GmbH & Co. v. C.H. Patrick Co.,
— F.3d —, 2006 WL 2806466 (Fed. Cir. Oct. 3, 2006) 8, 25

Elkins v. United States,
364 U.S. 206 (1960) 27

Expanded Metal Co. v. Bradford,
214 U.S. 366 (1909) 22

TABLE OF AUTHORITIES (cont'd)

Page(s)

Festo Corp. v. Shoketsu Kinzoku Kogyo Kabushiki Co., Ltd.,
535 U.S. 722 (2002) 17

Graham v. John Deere Co.,
383 U.S. 1 (1966) 8, 19, 22, 26

Hotchkiss v. Greenwood,
52 U.S. (11 How.) 248 (1850) 21, 26

In re Kahn,
441 F.3d 977 (Fed. Cir. 2006) 7, 8, 10, 13

In re Kotzab,
217 F.3d 1365 (Fed. Cir. 2000)..... 7

In re Kumar,
418 F.3d 1361 (Fed. Cir. 2005)..... 27

Jurgensen v. Ostby & Barton Co.
335 U.S. 560 (1949) 23, 24

Mandel Bros. v. Wallace
335 U.S. 291 (1948) 24

Ormco Corp. v. Align Technology, Inc.,
— F.3d —, 2006 WL 2493245 (Fed. Cir. Aug. 30, 2006) 8

Sandt Tech., Ltd. v. Resco Metal & Plastics Corp.,
264 F.3d 1344 (Fed. Cir. 2001)..... 8

Thomson Spot Welder Co. v. Ford Motor Co.,
265 U.S. 445 (1924) 23, 24

TABLE OF AUTHORITIES (cont'd)

Page(s)

United States v. Adams,
383 U.S. 39 (1966) 24

Warner-Jenkinson Co., Inc. v. Hilton Davis Chem. Co.,
520 U.S. 17, 32 n.6 (1997) 17

Webster Loom Co. v. Higgins,
105 U.S. (15 Otto) 580 (1881) 22

Statutes

35 U.S.C § 103(a) (2000) 19, 26

35 U.S.C § 282 (2000) 27

Other Authorities

B. Fischoff, *Hindsight is Not Equal to Foresight: The Effect of Outcome Knowledge on Judgment Under Uncertainty*, 1 J. OF EXPERIMENTAL PSYCHOL.: HUM. PERCEPTION & PERFORMANCE 288, 289-91 (1975) 13

D.K. Kagehiro et al., *Hindsight Bias and Third-Party Consents to Warrantless Police Searches*, 15 LAW & HUM. BEHAV. 305 (1991) 14

G. Mandel, *Patently Non-Obvious: Empirical Demonstration that the Hindsight Bias Renders Patent Decisions Irrational*, 67 OHIO ST. L.J. ___ (2006) 15

TABLE OF AUTHORITIES (cont'd)

Page(s)

G.V. Bodenhausen, *Second-guessing the Jury: Stereotypic and Hindsight Biases in Perceptions of Court Cases*, 20 J. APPLIED SOC. PSYCHOL. 1112 (1990) 14

Giles S. Rich, *Laying the Ghost of the Invention Requirement*, 1 APLA Q.J. 26-45 (1972), *reprinted in* 14 Fed. Cir. B.J. 163, 170 (2004) 19

H.R.Rep. No. 1923 (1952) 19, 20

J. Christensen-Szalanski & C.F. Willham, *The Hindsight Bias: A Meta-analysis*, 48 ORGANIZATIONAL BEHAV. & HUM. DECISION PROCESSES 147, 150 (1991) 13

J. Rachlinski, *Heuristics And Biases In The Courts: Ignorance Or Adaptation?*, 79 OR. L. REV. 61, 69-70 (2000) 14, 20

J.D. Casper et al., *Cognition, Attitudes, and Decision Making in Search and Seizure Cases*, 18 J. OF APPLIED SOC. PSYCHOL. 93 (1988) 14

K. A. Kamin & J. J. Rachlinski, *Ex Post ≠ Ex Ante: Determining Liability in Hindsight*, 19 LAW & HUM. BEHAV. 89, 98 (1995) 14

S. A. Hawkins & R. Hastie, *Hindsight: Biased Judgments of Past Events after the Outcomes are Known*, PSYCHOLOGICAL BULLETIN 107, no. 3, at 311-27 (1990) 13

S.Rep. No. 1979 (1952) 19

TABLE OF AUTHORITIES (cont'd)

Page(s)

Rules

Fed. R. Civ. P. 52(a) 11

Fed. R. Evid. 407 advisory committee note 20

INTEREST OF THE *AMICI CURIAE* [1]

The *Amici* have been leaders in America's technological innovation for over 100 years. Their patent portfolios protect their enormous investments in research and development, and they regularly rank near the top of the annual list of United States patent recipients. As patent holders and defendants in patent litigation, the *Amici* have a strong interest in clear and predictable patent laws, which have become essential to the continued vitality of the country's economy.

Amici believe that the Federal Circuit's flexible "motivation, suggestion, or teaching" test provides such predictability for the inherently subjective obviousness standard. The Federal Circuit's test provides an objective, yet flexible, evidentiary framework for obviousness determinations to guard against hindsight subjectivity. The Federal Circuit's flexible "motivation, suggestion, or teaching" test requires specific evidence showing why one skilled in the art would have had a ***reason*** to combine or modify the prior art to reach the claimed invention. In other words, a claimed invention cannot be held obvious just because it seems so after the fact to a patent examiner, judge, or jury.

---

[1] Counsel for the parties have consented in writing to the filing of this brief, and their letters of consent have been filed with the Clerk. Pursuant to Rule 37.6, no counsel for either party had any role in authoring this brief in whole or in part, and no party other than the named *Amici* has made any monetary contribution toward the preparation and submission of this brief.

Amicus 3M Co., which began operations in 1902, is a diversified technology company with a global presence in the health care, industrial, display and graphics, consumer and office, safety, security and protection services, electronics and telecommunications, and transportation markets. 3M sells more than 50,000 goods and services to customers around the world. Annual R&D spending at 3M exceeds $1 billion, and to protect this investment, 3M owns over 7,000 United States patents and over 19,000 patents around the world. In 2005, 3M was awarded 487 United States patents.

Amicus General Electric Co. is one of the largest and most diversified industrial corporations in the world. Since its incorporation in 1892, GE has developed a wide variety of products for the generation and utilization of electricity. GE is a major supplier of other technologies and services in fields as varied as healthcare, homeland security, financial services, and entertainment. Total research and development expenditures at GE were $3.4 billion in 2005. GE also has a substantial patent portfolio, with over 18,000 United States patents, 1,180 of which were issued last year.

Amicus The Procter & Gamble Company, founded in 1837, is the largest consumer products company in the world. It markets over 300 products, including 22 brands with one billion dollars or more in sales, in 140 countries. Research and product development are central to Procter & Gamble's success as reflected by approximately $1.8 billion in annual R&D spending and over 40,000 patents worldwide.

Amicus E.I. du Pont de Nemours and Company is a science company. Founded in 1802, it is a world

leader in science and technology in a range of disciplines, including biotechnology, electronics, materials science, safety and security. In 2005, DuPont's research and development expenditures were $1.3 billion and it was granted approximately 400 United States patents. Since 1804, when company founder E.I. du Pont was granted DuPont's first patent, DuPont has been awarded nearly 34,000 U.S. Patents.

Amicus Johnson & Johnson began as a medical products business in 1886. Today, Johnson & Johnson is the world's most comprehensive and broadly based manufacturer of health care products, for the consumer, pharmaceutical, biotechnology, and medical device and diagnostics markets. Johnson & Johnson's more than 200 operating companies employ approximately 115,000 men and women. In 2006, these companies will invest nearly $7 billion in research and development; they now hold over 7,000 United States patents.

SUMMARY OF THE ARGUMENT

Amici support the Federal Circuit's current "motivation, suggestion, or teaching" test as the exclusive standard for determining whether or not prior art may be combined or modified to conclude that a claim in a patent or patent application would have been obvious to a person of ordinary skill in the art at the time the invention was made.[2] For the past

---

[2] *Amici* do not express a view on the merits of this case. They support Respondents' position, however, that the Federal Circuit's current "motivation, suggestion, or teaching" test should be preserved as the sole standard for determining the propriety of a prior art combination or modification.

quarter of a century, this test has offered an objective, yet flexible, evidentiary standard on which patentees and the public have come to rely. The test, flexible in theory and application, is an evidentiary standard that guards against the danger of hindsight bias and the risk of arbitrary decision-making. Contrary to arguments raised against it, this test does not require an express teaching in the prior art to combine or modify the cited references. Rather, it requires no more than the identification of supporting evidence or the articulation of the reason that a hypothetical skilled artisan would have been expected to come up with the patented invention. This objective evidentiary framework prevents patent challengers from picking and choosing disparate ideas out of the prior art, and simply lumping them together without explanation, to re-create a patented invention.

If the Court eliminated the "motivation, suggestion, or teaching" standard, obviousness determinations would become subject to unfettered subjectivity and resulting unpredictability. There would be no evidentiary safeguard against hindsight bias in obviousness determinations by patent examiners, judges, or juries. Hindsight bias is a very real problem when a factfinder makes an after-the-fact determination regarding obviousness. As numerous empirical studies in litigation and other contexts have demonstrated, factfinders aware of a certain outcome are significantly more likely to fall prey to hindsight bias and incorporate expectations about the outcome in their decisions.

Moreover, the Federal Circuit's 25 years of jurisprudence applying the "motivation, suggestion, or

teaching" test has created settled expectations in the inventive and business communities. Changes to such settled rules of law involve numerous policy considerations, which should be left to Congress rather than the courts.

Contrary to the arguments of KSR and its *amici*, the Federal Circuit's "motivation, suggestion, or teaching" test is consistent with the Congressional intent and policy underlying 35 U.S.C. § 103(a), which was intended to prevent the same types of hindsight reconstructions of inventions that the "motivation, suggestion, or teaching" test seeks to prevent. Indeed, Congress expressly forbade *ex post* reconstructions of the claimed invention from the prior art by requiring that obviousness be decided "at the time the invention was made." Likewise, this Court has often warned against the use of hindsight in deciding obviousness, and the Federal Circuit's "motivation, suggestion, or teaching" test is nothing more than an effective implementation of this concern—a fine-tuning of this Court's law that is the Federal Circuit's central role.

Finally, although no one claims it is perfect, the Federal Circuit's "motivation, suggestion, or teaching" test is superior to the alternatives presented in this case by KSR and its *amici*. Taking one example in particular, the Government's proposed "extraordinary level of innovation" test does not find support in this Court's precedent, provides no meaningful or objective guidance to the Patent & Trademark Office, to courts or to parties appearing before them, and does nothing to guard against the risk of hindsight bias in obviousness determinations. By injecting added subjectivity into the determination, the Gov-

ernment's proposed test would exacerbate the risk of hindsight and arbitrary decision-making on the question of obvious/nonobvious.

ARGUMENT

I. *AMICI* SUPPORT THE FEDERAL CIRCUIT'S "MOTIVATION, SUGGESTION, OR TEACHING" TEST AS AN OBJECTIVE, YET FLEXIBLE, EVIDENTIARY STANDARD FOR THE INHERENTLY SUBJECTIVE OBVIOUSNESS INQUIRY

Amici strongly support the Federal Circuit's existing "motivation, suggestion, or teaching" test as the exclusive standard for determining whether or not a combination or modification of the prior art may be made to render a claimed invention obvious. Since the inception of the Federal Circuit, this test has come to offer an objective evidentiary standard on which patentees and the public have come to rely. The Federal Circuit's test provides an objective evidentiary framework for patent applicants and patent examiners to use to assess the patentability of claimed subject matter during prosecution in the Patent & Trademark Office. Likewise, patentees and defendants in litigation involving issued patents have a clear understanding of the evidence needed to support an obviousness defense, and judges and juries have a framework against which they can measure the patent challenger's obviousness evidence. As such, the Federal Circuit's test lends objectivity and predictability to the inherently subjective question of what would have been obvious to one skilled in the art at the time the invention was made.

A. The Federal Circuit's Test Is Flexible In Theory and Practice

KSR and its *amici* criticize the Federal Circuit's "motivation, suggestion, or teaching" standard for being too "rigid" and too demanding because it allegedly requires the identification of an explicit teaching in a prior art reference. *E.g.* Pet. Br. at 32-43; *Amici* Br. for Time-Warner *et al.*, at 9-17. In doing so, they attack the proverbial straw-man, knocking down a standard that does not exist.

To the contrary, the motivation to combine does *not* need to be explicit or even written. As the Federal Circuit explained on numerous occasions, "[a] suggestion, teaching, or motivation to combine the relevant prior art teachings does not have to be found explicitly in the prior art, as 'the teaching, motivation, or suggestion may be implicit from the prior art as a whole, rather than expressly stated in the references.'" *In re Kahn*, 441 F.3d 977, 986 (Fed. Cir. 2006) (quoting *In re Kotzab*, 217 F.3d 1365, 1370 (Fed. Cir. 2000)). In fact, evidence for the requisite motivation, suggestion, or teaching "may flow from the prior art references themselves, the knowledge of one of ordinary skill in the art, or, in some cases, from the nature of the problem to be solved." *Brown & Williamson Tobacco Corp. v. Philip Morris Inc.*, 229 F.3d 1120, 1125 (Fed. Cir. 2000).

This flexible approach is not a mere theory; the Federal Circuit applies it in practice as well. *E.g.*, *Dystar Texilfarben GmbH & Co. v. C.H. Patrick Co.*, — F.3d —, 2006 WL 2806466, at *12-13 (Fed. Cir. Oct. 3, 2006); *Alza Corp. v. Mylan Labs.*, — F.3d —, 2006 WL 2556356, at *6-8 (Fed. Cir. Sept. 6, 2006) (affirming obviousness determination where expert

testimony alone provided the evidence of the motivation to combine); *Ormco Corp. v. Align Technology, Inc.*, — F.3d —, 2006 WL 2493245, at *6-7 (Fed. Cir. Aug. 30, 2006) (finding obvious orthodontic device patent claim requiring the provision of instructions to patients based on motivation to combine from general medical practice and FDA regulations); *Cross Med. Prods., Inc. v. Medtronic Sofamor Danek, Inc.*, 424 F.3d 1293, 1322 (Fed. Cir. 2005) (noting that "the motivation to combine need not be found in prior art references, but equally can be found in the knowledge generally available to one of ordinary skill in the art" such as knowledge of a problem to be solved); *Sandt Tech., Ltd. v. Resco Metal & Plastics Corp.*, 264 F.3d 1344, 1355 (Fed. Cir. 2001) (ruling that the motive to alter the prior art came from the fact that the substitute material "was a cheaper, faster, and more convenient method of attachment").

Because the "motivation, suggestion, or teaching" test permits explicit or implicit evidence, it is quite flexible in practice, and "has permitted [the Federal Circuit] to continue to address an issue of law not readily amenable to bright-line rules, as we recall and are guided by the wisdom of the Supreme Court in striving for a 'practical test of patentability.'" *Alza*, 2006 WL 2556356, at *4 (quoting *Graham v. John Deere Co.*, 383 U.S. 1, 17 (1966)). Indeed, in the face of misinterpretations of the standard by various parties, the Federal Circuit has recently re-emphasized that the test is flexible. *See Dystar*, — F.3d —, 2006 WL 2806466, at *12-13; *Ormco*, — F.3d —, 2006 WL 2493245, at *6-7; *Alza*, — F.3d —, 2006 WL 2556356, at *6-8; *In re Kahn*, 441 F.3d at 987-88. These recent cases aptly demonstrate the flexibility of the Federal Circuit's "motivation, suggestion, or

teaching" test to guide the obviousness inquiry in disparate technology areas and in the context of differing evidence offered to show obviousness.

B. The "Motivation, Suggestion, or Teaching" Test Is An Evidentiary Standard That Fosters Predictability and Fairness

Nonobviousness is an inherently subjective and notoriously difficult inquiry. It requires a patent examiner, or a judge or jury, to place himself or herself in the shoes of a hypothetical "person of ordinary skill in the art," working often years in the past at a point in time before conception of the invention, and all the while resisting the very natural, but dangerous, temptation to use hindsight. Due to its nature, there is a great risk of unfettered subjectivity in performing this analysis—in concluding that the claim is "obvious because it seems pretty obvious to me."

The Federal Circuit's test is, and has always been, an objective evidentiary standard designed generally to lend objectivity to this analysis. Specifically, the test guards against the danger of hindsight bias. *Alza*, — F.3d —, 2006 WL 2556356, at *3 ("At its core, our anti-hindsight jurisprudence is a test that rests on the unremarkable premise that legal determinations of obviousness, as with such determinations generally, should be based on evidence rather than on mere speculation or conjecture."); *C.R. Bard, Inc. v. M3 Sys., Inc.*, 157 F.3d 1340, 1352 (Fed. Cir. 1998) (indicating that a showing of a suggestion, teaching, or motivation to combine the prior art references is an "essential evidentiary component of an obviousness holding").

In the patent prosecution context, this evidentiary standard stands as a procedural safeguard against arbitrary agency action. As the Federal Circuit has explained:

> [R]ejections on obviousness grounds cannot be sustained by mere conclusory statements; instead, there must be *some* articulated reasoning with *some* rational underpinning to support the legal conclusion of obviousness. This requirement is as much rooted in the Administrative Procedure Act, which ensures due process and non-arbitrary decisionmaking, as it is in § 103.

In re Kahn, 441 F.3d at 987-88 (emphases added). The administrative process does not condone arbitrary actions based on no more than a "because I said so" assertion, and this evidentiary standard affords applicants and reviewing courts the opportunity to understand the specific evidence underlying the agency's reasoning and decision.

In litigation, this evidentiary standard provides meaningful guidance to juries and judges, helping them to overcome hindsight and truly base their conclusions on the art "at the time the invention was made." 35 U.S.C. § 103(a). Rather than imposing an unnecessary hurdle, this flexible evidentiary standard merely requires the party challenging the validity of a patent, which enjoys a statutory presumption of validity, 35 U.S.C. § 282, to explain to the fact-finder what would have caused or "motivated" the skilled artisan to bridge the gap between the prior art and the patented invention. This evidentiary standard respects the statutory presumption of va-

lidity and ensures that the burden of proof remains on the party designated by law and precedent.

This evidentiary standard is likewise crucial to orderly and proper appellate review from agency or court decisions. Without the standard's guidance and the requisite identification of *some* evidence justifying the combination of prior art, appellate review would become a pure guessing-game, rather than the appropriate scrutiny required by applicable law, rules, and precedent. *See Dennison Mfg. Co. v. Panduit Corp.*, 475 U.S. 809-811 (1986) (vacating nonobviousness determination because the Federal Circuit failed to apply the standard of Fed. R. Civ. P. 52(a) to the factual determination of the district court).

Without this evidentiary standard, patent applicants and litigants would be left at the mercy of an agency, or a judge's or jury's decision, even if arbitrary or animated more by hindsight bias than the *ex ante* inquiry required by the statute. Effective appellate review of such decisions would be difficult, if not impossible, given the lack of any meaningful evidentiary standard by which to review the decision that one skilled in the art would have been motivated to combine or modify the prior art to arrive at the claimed invention.

II. THE FEDERAL CIRCUIT'S FLEXIBLE "MOTIVATION, SUGGESTION, OR TEACHING" TEST IS ESSENTIAL TO THE PATENT SYSTEM

There are few, if any, issues as fundamental or pervasive in patent law as the issue of obviousness. Nonobviousness is the ultimate test of patentability for all inventions. It is an issue that must be consid-

ered during the examination and before the grant of every U.S. patent application. Obviousness is a defense raised in virtually every patent infringement case.

At the same time, the question of what would have been obvious to a person of ordinary skill in the art at the time the invention was made is notoriously subjective and difficult. Even the best-intentioned patent examiner, judge, or juror may be unable to answer that question without allowing hindsight to creep into his or her thinking.

Thus, objective evidentiary standards to help guide the obviousness inquiry are essential to provide consistency and objectivity to this fundamental issue of patent law. For almost 25 years, patent owners and their competitors have invested in R&D, and have built patent portfolios, under the Federal Circuit's "motivation, suggestion, teaching" requirement. A fundamental change in that requirement now not only would undermine those investments and settled expectations, but would also inject added uncertainty and unpredictability into the patent system. Such a result would ultimately unbalance the incentive system upon which the patent laws are based.

A. The Lack of Objective Evidentiary Standards To Guard Against Hindsight Bias in Obviousness Determinations Would Undermine the Patent Incentive System

Although KSR and its *amici* agree that obviousness determinations based on hindsight are undesirable, *e.g.*, Gov't *Amicus* Br. at 20-21; IBM *Amicus* Br. at 17, they consistently brush aside this concern.

Some *amici*, like the United States, even attempt to downplay the danger of hindsight, *e.g.*, Gov't *Amicus* Br. at 20-21, which the Federal Circuit has plainly identified as the evil to be remedied by the "motivation, suggestion, teaching" requirement. *See In re Kahn*, 441 F.3d at 986. However, a large body of empirical studies has shown that hindsight bias is common in everyday life and in the law.

Long acknowledged in cultural adages such as "Monday morning quarterbacking" or "20/20 hindsight," hindsight bias is a well-known cognitive phenomenon and has been the subject of many scientific studies. *E.g.*, S. A. Hawkins & R. Hastie, *Hindsight: Biased Judgments of Past Events after the Outcomes are Known*, PSYCHOLOGICAL BULLETIN 107, no. 3, at 311-27 (1990) (reviewing and analyzing research on hindsight bias); B. Fischoff, *Hindsight is Not Equal to Foresight: The Effect of Outcome Knowledge on Judgment Under Uncertainty*, 1 J. OF EXPERIMENTAL PSYCHOL.: HUM. PERCEPTION & PERFORMANCE 288, 289-91 (1975) (demonstrating that study subjects aware of the outcome of an event were 14.7-23.4% more likely to predict the occurrence of that outcome).

These studies have consistently demonstrated and documented the existence of hindsight bias using a variety of different methods, materials, and subjects. *See* J. Christensen-Szalanski & C.F. Willham, *The Hindsight Bias: A Meta-analysis*, 48 ORGANIZATIONAL BEHAV. & HUM. DECISION PROCESSES 147, 150 (1991) (providing a meta-analysis of hindsight bias empirical studies and concluding that 122 out of 128 studies reported a significant hindsight bias effect). Remarkably, this cognitive phe-

nomenon equally afflicts lay persons and experts across diverse backgrounds and in many different fields. *See, e.g.*, K. A. Kamin & J. J. Rachlinski, *Ex Post ≠ Ex Ante: Determining Liability in Hindsight*, 19 LAW & HUM. BEHAV. 89, 98 (1995) (citing studies of significant hindsight bias in surgeons' appraisal of surgical cases, physicians' medical diagnoses, women's reactions to pregnancy tests, voters' election predictions, and nurses' employee evaluations).

Hindsight bias is similarly problematic in the legal and judicial context. *See* J. Rachlinski, *Heuristics And Biases In The Courts: Ignorance Or Adaptation?*, 79 OR. L. REV. 61, 69-70 (2000) (discussing various empirical studies of hindsight bias in legal settings). For instance, knowledge of search and seizure outcome influences mock-jurors' judgments regarding the legality of the search and the damage awards against police officers for these illegal searches. *See* D.K. Kagehiro et al., *Hindsight Bias and Third-Party Consents to Warrantless Police Searches*, 15 LAW & HUM. BEHAV. 305 (1991); J.D. Casper et al., *Cognition, Attitudes, and Decision Making in Search and Seizure Cases*, 18 J. OF APPLIED SOC. PSYCHOL. 93 (1988); *see also* G.V. Bodenhausen, *Second-guessing the Jury: Stereotypic and Hindsight Biases in Perceptions of Court Cases*, 20 J. APPLIED SOC. PSYCHOL. 1112 (1990). Similarly, in another study in the tort context, 57% of subjects with hindsight knowledge that an accident actually occurred deemed negligent the failure to take precautionary measures, while 76% of subjects without this insight reached the converse conclusion and believed that the accident was too *unlikely* to have occurred to require the same precautions. Kamin & Rachlinski, *supra*, at 94-97.

In patent law, unchecked hindsight bias would threaten the careful incentives created by the statutory scheme. With the benefit of hindsight, many inventions, which were exceptional when discovered, may appear today to be unremarkable. For example, although the wheel or the number zero are obvious concepts today, the Incan civilization never used the wheel, while the Greek and Roman civilizations never discovered the algebraic zero. More recently, today Post-it® Notes may seem to be obvious, but that is only because they have been nearly ubiquitous in our daily lives for 25 years.

Further backing these examples is a recent empirical study demonstrating that hindsight bias prejudices patent decisions, including obviousness determinations, far more than anticipated. G. Mandel, *Patently Non-Obvious: Empirical Demonstration that the Hindsight Bias Renders Patent Decisions Irrational*, 67 OHIO ST. L.J. ___ (2006) (forthcoming). Because today's inventions are merely combinations of yesterday's knowledge, all the elements of a patent claim can ultimately be found—piece-by-piece—in the prior art and deemed obvious, once combined, under the influence of this cognitive bias. *Cf. Graham*, 383 U.S. at 36 (noting that secondary considerations "may also serve to guard against slipping into use of hindsight, and to resist the temptation to read into the prior art the teachings of the invention in issue." (internal quotation marks and citations omitted)).

In such a system where factfinders are more likely to invalidate patents, the incentive to strike the "patent bargain" – disclosure of the invention in return for limited-term patent rights – would be

skewed against patenting. Fewer inventors would choose to disclose their inventions, and fewer companies would risk long-term investments in research and development if their ability to protect those investments with patent rights were determined under the wholly subjective standards urged by KSR and its *amici*.

B. Eliminating the "Motivation, Suggestion, or Teaching" Standard Would Unsettle Long-Held Expectations of *Amici* and Other Patent Owners

In their zeal to overturn over twenty years of Federal Circuit obviousness jurisprudence, KSR and most of its *amici* ignore a crucial and salient consideration from the patent policy perspective: the settled expectations of the inventing community. Since its inception, the Federal Circuit has applied its "motivation, suggestion, or teaching" standard in hundreds, if not thousands, of cases. The Patent & Trademark Office has also reviewed and issued millions of patents based on this settled standard. As one of KSR's own *amici* concedes, the community of "practitioners, inventors, and businesses . . . have come to rely on it." IBM *Amicus* Br. at 16.

Every one of the patents currently in force today had its claims drafted to match that standard and examined under that standard. Companies like the *Amici* have invested billions of dollars on research and development, in long-term commitments of resources, and on building their patent portfolios under the "motivation, suggestion, or teaching" standard.

As this Court's own patent case law teaches, such settled expectations and reliance should not be easily

cast aside. *See Festo Corp. v. Shoketsu Kinzoku Kogyo Kabushiki Co., Ltd.*, 535 U.S. 722, 739 (2002) (stating that "courts must be cautious before adopting changes that disrupt the settled expectations of the inventing community."). Chastising the Federal Circuit for disturbing well-settled expectations in suddenly adopting a strict approach to the doctrine of prosecution history estoppel, this Court explained:

> The responsibility for changing them [settled rules] rests with Congress. Fundamental alterations in these rules risk destroying the legitimate expectations of inventors in their property. The petitioner in *Warner-Jenkinson* requested another bright-line rule that would have provided more certainty in determining when estoppel applies but at the cost of disrupting the expectations of countless existing patent holders. We rejected that approach: "To change so substantially the rules of the game now could very well subvert the various balances the PTO sought to strike when issuing the numerous patents which have not yet expired and which would be affected by our decision."

Id. (quoting *Warner-Jenkinson Co., Inc. v. Hilton Davis Chem. Co.*, 520 U.S. 17, 32 n.6 (1997)); *see also Warner-Jenkinson*, 520 U.S. at 41 (Ginsburg, J., concurring) ("The new presumption, if applied woodenly, might in some instances unfairly discount the expectations of a patentee who had no notice at the time of patent prosecution that such a presumption would apply.").

Upending nearly a quarter-century of jurisprudence at this point would throw into question the va-

lidity of millions of issued patents, cause the reassessment of patent licenses worth billions of dollars, make patent litigation more difficult to settle, and inevitably create more litigation for the courts. Such a change would be particularly unfair because of its impact on issued patents: patentees would be stuck with negotiating their patent coverage under one standard, but having to defend it under a different standard.

Simply put, the Court should not revisit a fundamental issue of patent law, settled under nearly 25 years of Federal Circuit jurisprudence, and re-write the standard under which every patent currently in force was granted. The effects of such a sea change would be too destabilizing. Changes to the long-standing rules underlying patent validity must balance competing policy questions that are best left to Congress, not the courts.

III. THE FEDERAL CIRCUIT'S "MOTIVATION, SUGGESTION, OR TEACHING" TEST LESSENS HINDSIGHT BIAS, CONSISTENT WITH THE PATENT ACT AND THIS COURT'S PRECEDENT

KSR and its *amici* essentially ignore the very hindsight problem that the statute prohibits, that this Court's precedent has disapproved, and that the Federal Circuit's test aims to prevent. When properly viewed in light of this overlooked concern, one reaches the opposite conclusion than KSR and its *amici*: the Federal Circuit's test implements the broad mandates of the statutory language and this Court's precedent, while fulfilling the Federal Cir-

cuit's central role in adding uniformity to difficult and complex questions of patent law.

A. The Federal Circuit's Test Implements the Statutory Language and Promotes Congress's Intent by Minimizing Hindsight Bias

When it codified the judicially-created doctrine of "inventive novelty" in section 103 of the 1952 Patent Act, Congress aimed to foster greater "uniformity and definiteness" in patentability determinations. *Graham*, 383 U.S. at 15 (quoting S.Rep. No. 1979, at 6 (1952); H.R.Rep. No. 1923, at 7 (1952)). Particularly, Congress noted that "[t]his section should have a stabilizing effect and minimize great departures which have appeared in some cases." *Id.*

To achieve these goals, Congress adopted section 103 as an inquiry into "the differences between the subject matter sought to be patented and the prior art ... such that the subject matter as a whole would have been obvious *at the time the invention was made* to a person having ordinary skill in the art to which said subject matter pertains." 35 U.S.C § 103(a) (emphasis added). By fixing the time frame for this inquiry "at the time the invention was made," Congress sought to minimize the deleterious effect of hindsight bias. *See* Giles S. Rich, *Laying the Ghost of the Invention Requirement*, 1 APLA Q.J. 26-45 (1972), *reprinted in* 14 Fed. Cir. B.J. 163, 170 (2004) ("To protect the inventor from hindsight rea-

soning, the time is specified to be *the time when the invention was made*." (emphasis in original)).[3]

Although requiring an inquiry "at the time the invention was made" is simple in formulation, such an *ex ante* determination often proves elusive in application. *See* Rachlinski, *supra*, at 70-71 ("Learning an outcome causes people to update their beliefs without even realizing it, making it impossible to restore, or even remember, the beliefs that they held before they learned the outcome."). While excluding evidence—such as post-accident remedial measures—can be an appropriate prophylactic in some context, *see* Fed. R. Evid. 407 advisory committee note (indicating that subsequent remedial measures are barely relevant and are suppressed out of a belief that fact-finders will give them more weight than is appropriate), evidence suppression is not a viable remedy for hindsight bias in obviousness inquiries, because the existence and understanding of the claimed subject matter is a prerequisite to any patent prosecution or litigation.

To implement the statutory requirement that courts must perform an *ex ante* obviousness inquiry, the Federal Circuit and its predecessor courts adopted the "motivation, suggestion, or teaching" test as a prophylactic against hindsight bias. By faithfully applying this test across a myriad of technologies and factual circumstances, the Federal Circuit promotes the legislative command of determin-

---

[3] Judge Giles Rich, late of the Federal Circuit and its predecessor court, was instrumental in the drafting of the 1952 Patent Act for the House Judiciary Committee. *See* H.R.Rep. No. 1923, 82d Cong., 2d Sess. (1952), at 3.

ing obviousness "at the time the invention was made." Rather than being inconsistent with the statute, this test actually advances Congress's aim of imparting "uniformity and definiteness" to patentability determinations.

B. The "Motivation, Suggestion, or Teaching" Test Is Consistent with This Court's Precedent

According to KSR and its *amici*, the "motivation, suggestion, or teaching" test is inconsistent with this Court's obviousness jurisprudence. *E.g.*, Pet. Br. at 17-32; Gov't Br. at 11-16. However, a careful review of the Court's case law reveals language remarkably similar to the Federal Circuit's test, and policy implications identical in concern about hindsight bias.

Just three decades after the germinal case of *Hotchkiss v. Greenwood*, 52 U.S. (11 How.) 248 (1850), this Court issued a stern warning against the influence of hindsight in applying the *Hotchkiss* test:

> This argument would be sound if the combination claimed by Webster was an obvious one for attaining the advantages proposed, one which would occur to any mechanic skilled in the art. But it is plain from the evidence, and from the very fact that it was not sooner adopted and used, that it did not, for years, occur in this light to even the most skilful persons. It may have been under their very eyes, they may almost be said to have stumbled over it; but they certainly failed to see it, to estimate its value, and to bring it into notice. . . . Now that it has succeeded, it may seem very plain to any one that he could

> have done it as well. This is often the case with inventions of the greatest merit.

Webster Loom Co. v. Higgins, 105 U.S. (15 Otto) 580, 591 (1881) (finding patent valid and infringed). Since then, the Court has likewise cautioned against the danger of hindsight. *E.g.*, *Diamond Rubber Co. v. Consolidated Rubber Tire Co.*, 220 U.S. 428, 434-35 (1911) ("Many things, and the patent law abounds in illustrations, seem obvious after they have been done,"); *see also Graham*, 383 U.S. at 36.

To guard against the danger of hindsight, the Court has relied on *ex ante* factors to resolve questions of obviousness. In *Expanded Metal Co. v. Bradford*, 214 U.S. 366 (1909), for example, the Court granted *certiorari* to resolve a conflict between two circuit courts regarding the validity of a patent on an improved method of making expanded sheet metal. 214 U.S. at 371-74. In sustaining the patent's validity, the Court first rejected one court's *ex post* approach:

> It is often difficult to determine whether a given improvement is a mere mechanical advance, or the result of the exercise of the creative faculty amounting to a meritorious invention. The fact that the invention seems simple after it is made does not determine the question; if this were the rule, many of the most beneficial patents would be stricken down.

Id. at 381. Adopting a clear *ex ante* analysis which eschewed hindsight bias, this Court then reasoned:

> *There is nothing in the prior art that suggests the combined operation* of the Golding patent in suit. . . . Others working in the same field

> had not developed it, and *the prior art does not suggest the combination of operations which is the merit of Golding's invention.*

Id. (emphases added and internal citation omitted). Based on this reasoning, this Court held the patent valid and infringed. *Id.* at 382-86.

Over the next few decades, the Court relied on this approach to adjudicate a number of close obviousness cases. In *Thomson Spot Welder Co. v. Ford Motor Co.*, 265 U.S. 445 (1924), the Court deemed a patent on spot welding to be obvious, because "given the desire for a welding in spots, *naturally enough suggested by the prior art* and by its commercial development, we think [patentee]'s specific application of the principles of that prior art involved only the skill of the expert mechanic." *Id.* at 451 (emphasis added).

Years later, in *Jurgensen v. Ostby & Barton Co.*, 335 U.S. 560 (1949), the Court again looked to prior art's teachings and suggestions to adjudicate the validity of combination patents. The *Jurgensen* patent had previously survived an invalidity challenge in one circuit, but was invalidated in another circuit. On review and after considering "the prior art as it existed at the time of this alleged invention," this Court concluded that the steps claimed by the method patent were already used in analogous settings. *Id. at 564* , ("The above-described developments in the prior art suggested no limitation of their applicability to any particular type of casting."). Thus, the *Jurgensen* Court did not limit its inquiry to a subjective comparison of the claimed invention with the prior art; it instead considered whether the

prior art suggested, or taught away from, the claimed combination

The same reasoning was at work in *Mandel Bros. v. Wallace*, 335 U.S. 291, 292 (1948), where the Court invalidated a patent on the use of a urea-based preparation as an antiperspirant. In reaching this conclusion, the Court again adopted an *ex ante* perspective by analyzing the content of patents issued before the one in suit, and noting that these patents "point to the possibility of using urea to inhibit unwanted decomposition of substances containing acid or acid salts [as in perspiration]." *Id.* at 294. Based on the state of the prior art and its teachings, the Court concluded that "the general store of chemical knowledge in 1938 was such that any one working on any problem of acidic corrosion and irritation would naturally and spontaneously have tried urea." *Id.* at 296. As in *Thomson* and *Jurgensen*, the Court relied on the specific content, state, and teaching of the prior art as a guide in its obviousness ruling.

Even after 1952, this Court applied this *ex ante* reasoning in its obviousness determinations. In *United States v. Adams*, 383 U.S. 39 (1966), the patent admittedly covered a combination of old elements well-known in the art, so that the difference between the patent and the prior art was at best minimal. *Id.* at 51-52 (noting that "each of the elements of the Adams battery was well known in the prior art"). The patent's nonobviousness turned, however, on the prior art's teachings, which "when taken together, would, we believe, deter any investigation into such a combination as is used by Adams." *Id.* at 52. In other words, the prior art did not motivate the ordinary skilled artisan to make the claimed invention; it

actually taught away from such a combination. *Id.* ("We do say, however, that known disadvantages in old devices which would naturally discourage the search for new inventions may be taken into account in determining obviousness.").[4]

Thus, this Court's pre- and post-1952 cases have considered and relied on the prior art's "motivation, suggestion, or teaching" to adjudicate whether a claimed invention was obvious to the skilled artisan. The Federal Circuit's test is therefore a consistent application (rather than a rejection) of this Court's precedent.

IV. THE PROPOSED ALTERNATIVE TESTS DO NOT COMPORT WITH THE PATENT STATUTE, PRECEDENT, OR PUBLIC POLICY

To replace the Federal Circuit's "motivation, suggestion, or teaching" test, KSR's *amici* have advanced various alternatives, including: (i) the Government's focus on "extraordinary level of innovation"; (ii) IBM's rebuttable presumption; and (iii) KSR's abandoned "synergy" idea from its petition. Although each of these proposed standards may appear attractive on the surface, a more careful scrutiny reveals their inadequacy.

While the Government advocated a case-by-case test in its petition-level brief, it now espouses an-

---

[4] *See also Dystar*, — F.3d —, 2006 WL 2806466, at *12-13 (reviewing post-1952 Supreme Court cases related to obviousness and concluding that the Federal Circuit's test is consistent with the Court's precedent).

other—albeit equally problematic—standard: "whether the claimed invention manifests the *extraordinary level* of innovation, beyond the capabilities of a person having ordinary skill in the art, that warrants the award of a patent." Gov't *Amicus* Br. at 10 (emphasis added). This test is, however, flawed for three reasons.

First, it does not flow from this Court's own precedent. Indeed, the Solicitor General does not cite a single Supreme Court case which turned on the determination of an *extraordinary* level of skill in the art. *See id.* at 11-24. To the contrary, the statute and this Court have consistently anchored the obviousness inquiry on whether the person having *ordinary* skill in the relevant art would deem the invention obvious. 35 U.S.C. § 103(a); *Graham*, 383 U.S. at 17; *Hotchkiss*, 52 U.S. at 267 (determining skill level of the "ordinary mechanic").

Second, the proposed inquiry does not provide any meaningful, objective guidance to the courts, agencies, litigants, or applicants. After all, whether an invention resulted from an extraordinary or ordinary level of skill is subjective and a matter of degree, boiling down to a "I'll know it when I see it" standard. Under such a subjective standard, reasonable minds—be it patent examiners, juries, district judges, or circuit judges—may and will differ widely.

Finally, the Government's test does not resolve the hindsight bias prohibited by 35 U.S.C. § 103(a) and this Court's precedent. At best, the proposed test merely condones an *ex post* adjudication of the patent's contributions by improperly raising the required skill level of an inventor.

Another proposed alternative test is IBM's rebuttable presumption test, in which "references should be *presumed* combinable by a person having ordinary skill in the art where the references are within the scope of the 'analogous art.'" IBM *Amicus* Br. at 18 (emphasis in original). Although IBM's proposal attempts to minimize hindsight bias through an objective *ex ante* test, it runs counter to the Patent Statute and imposes an inappropriate burden on patent applicants and patentees. Indeed, under IBM's test, a patent would be presumed obvious, and thus invalid, if it results from the combination of knowledge in the analogous art. Such a judicially created presumption would directly contradict and undermine the Congressionally sanctioned presumption of validity that attaches to all issued patents, 35 U.S.C § 282 ("A patent shall be presumed valid."), particularly since almost all inventions are combinations of preexisting components. It therefore cannot apply in post-issuance patent litigation.

But even in the patent prosecution context, where the presumption of validity does not attach, IBM's test alters the settled burden of proof. *See In re Kumar*, 418 F.3d 1361 (Fed. Cir. 2005) ("During examination, the examiner bears the initial burden of establishing a *prima facie* case of obviousness."). Worse yet, IBM's proposed standard would impose on the applicant the initial burden of proving a negative—that the invention is *not* obvious—at a time when few, if any, secondary considerations (which are typical evidentiary indications of nonobviousness) would exist. *See Elkins v. United States*, 364 U.S. 206, 218, (1960) ("[A]s a practical matter it is never easy to prove a negative"). For these reasons,

the test advocated by *amicus* IBM is equally unworkable.

As for KSR, it has abandoned the "synergy" test it advocated in its petition, and for good reason. That test would hold that an invention combining elements found in prior art references is obvious "unless the combination produces 'a new or different function' or demonstrates a 'synergistic result.'" KSR Pet. at 14 (citations omitted). As IPO's *amicus* brief explains, such a test is fraught with significant shortcomings, including the possible invalidation of existing worthwhile mechanical or hydraulic patents and the test's inconsistency with § 103's language and legislative history. *See* IPO *Amicus* Br. at 14-15. KSR's decision to jettison its proposed test speaks volumes about that standard's merits.

At bottom, despite any shortcomings, the Federal Circuit's test remains superior to its alternatives. It stands as the best standard for furthering Congress's policy and statutory command, and adhering to this Court's precedent, that obviousness determinations should not be colored by hindsight bias.

CONCLUSION

For the foregoing reasons, *Amici* support the decision of the Federal Circuit and urge affirmance by this Court.

Respectfully submitted,

Q. TODD DICKINSON
V.P. and Chief IP Counsel
GENERAL ELECTRIC COMPANY
3135 Easton Turnpike
Fairfield, CT 06828

STEVEN W. MILLER
V.P. and General Counsel
THE PROCTER & GAMBLE COMPANY
6090 Center Hill Avenue
Cincinnati, OH 45224

PHILIP S. JOHNSON
Chief Patent Counsel
JOHNSON & JOHNSON
One Johnson & Johnson Plaza
New Brunswick, N.J. 08533

GARY L. GRISWOLD
Counsel of Record
Staff V.P. and Chief IP Counsel
3M COMPANY
3M Center -P.O. Box 33427
St. Paul, MN 55144

P. MICHAEL WALKER
Associate General Counsel and
Chief IP Counsel
E.I. DU PONT DE NEMOURS AND COMPANY
DuPont Building
1007 Market Street
Wilmington, DE 19898

Attorneys for Amici Curiae

245

~~240~~

(33)

No. 04-1350

Supreme Court, U.S.
FILED
SEP 2 5 2006
OFFICE OF THE CLERK

In the Supreme Court of the United States

KSR INTERNATIONAL CO.,
Petitioner,

vs.

TELEFLEX INC. and
TECHNOLOGY HOLDING CO.,
Respondents.

On Writ of Certiorari to the
United States Court of Appeals
for the Federal Circuit.

BRIEF OF LEE THOMASON AS *AMICUS CURIAE* IN SUPPORT OF RESPONDENTS.

LEE THOMASON
SPALDING & THOMASON
106 North 4th St.
Bardstown, KY 40004
(502) 349-7227
Amicus Curiae
and Counsel

Sept. 25, 2006

QUESTION PRESENTED

Whether the Federal Circuit erred in holding that a claimed invention cannot be held "obvious," and thus unpatentable under 35 U.S.C. §103(a), in the absence of some proven "'teaching, suggestion, or motivation' that would have led a person of ordinary skill in the art to combine the relevant prior art teachings in the manner claimed."

TABLE OF CONTENTS

	Page
QUESTION PRESENTED	i
TABLE OF CONTENTS	ii
TABLE OF CITED AUTHORITIES	iv
INTEREST OF AMICUS	1
STATEMENT OF THE CASE	3
SUMMARY OF THE ARGUMENT	4
ARGUMENT	5
1. AMPLE GROUNDS TO AFFIRM	5
2. NOVEL COMBINATIONS, EVEN THOSE NON-PIONEERING COMBINATIONS, ARE ENTITLED TO PATENT PROTECTIONS, INCLUDING THE PRESUMPTION OF VALIDITY.	6
3. AFFIRMANCE IS WARRANTED UNDER THE STANDARD OF REVIEW APPROPRIATE TO RULE 56 RULINGS, AS WELL AS, UNDER THE REVIEW STANDARD APPLIED TO EQUITABLE DECREES.	7

4. INVALIDATING A PATENT UPON A SHOWING OF OBVIOUSNESS IS AN EQUITABLE REMEDY. 9

5. PETITIONER AND *AMICI* PROPOSE CHANGES TO PRECEDENT THAT REQUIRE LEGISLATIVE ACTION. 12

CONCLUSION 17

TABLE OF CITED AUTHORITIES

Page

SUPREME COURT CASES.

Campbell v. City of Haverhill,
155 U.S. 610 (1895) 11

Dann v. Johnston,
425 U.S. 219 (1976) 6

Diamond Rubber Co. v.
Consolidated Rubber Tire Co.,
220 U.S. 428, 435 (1911) 16-17

eBay v. MercExchange,
547 U.S. ___,
126 S.Ct. 1837 (2006) 9

Graham v. Deere, 383 U.S. 1 (1966) .... *passim*

Washburn & Moen Mfg. Co. v.
Beat`Em All Barbed Wire Co,
143 U.S. 275 (1892) 7

FEDERAL CIRCUIT CASES.

Alza Corp. v. Mylan Labs,
2006 WL 2556356
(Fed. Cir. Sept. 9, 2006) 13

Cross Med. Prods., Inc., v.
Medtronic Sofamor Danek, Inc.,
424 F.3d 1293 (Fed. Cir. 2005) 9

In re Napier,
55 F.3d 610 (Fed. Cir. 1995) 9

In re Technology Licensing,
423 F.3d 1286 (Fed. Cir. 2005) 9

Tegal Corp. v.
Tokyo Electron America, Inc.,
237 F.3d 1331 (Fed. Cir. 2001) 9

STATUTES.

35 U.S.C. §102 ..... 7, 14
35 U.S.C. §103(a) 7, 10, 13, 14, 15, 17
35 U.S.C. §282 14
Act of April 17, 1800 (2 Stat. 37) 11
Act of February 19, 1819 (3 Stat. 481) 11

OTHER AUTHORITIES.

Blackstone's Commentaries on the Laws of England,
Book III – Chapter 17 10

POMEROY, *A Treatise on Equity Jurisprudence*,
§109 (4th ed. 1918) 11

No. 04-1350

In the Supreme Court of the United States

KSR INTERNATIONAL CO.,
Petitioner,

vs.

TELEFLEX INC. and
TECHNOLOGY HOLDING CO.,
Respondents.

On Writ of Certiorari to the
United States Court of Appeals
for the Federal Circuit.

BRIEF OF LEE THOMASON AS *AMICUS CURIAE* IN SUPPORT OF RESPONDENTS AND AFFIRMANCE.

Interest of *Amicus Curiae*

Lee Thomason respectfully submits this brief as *amicus curiae,* in support of Respondents, pursuant to Supreme Court Rule 37.2(a).[1] Both the

---

[1] Pursuant to Supreme Court Rule 37.6, *amicus curiae* states that counsel for the parties have not authored any portion of this brief, in whole or in part. No person or

Petitioner and the Respondents have filed written consent to the filing of *amicus* briefs with this Honorable Court.

The interest of the undersigned as *amicus curiae* is as a registered patent attorney, who litigates patent cases, including in courts within the 6th Circuit, from which the *KSR* case comes, and including cases involving the obviousness defense. Also, *amicus* has presented appeals to the Court of Appeals for the Federal Circuit since admission there in 1986. The undersigned has petitioned for certiorari from rulings of the Federal Circuit, since having been admitted to practice before the Supreme Court in 1990.

Further, *amicus* has participated actively in patent legislation reform efforts, by submitting comments at hearings, and to legislative committees. Previously, *amicus* chaired the subcommittee of a major, IP law organization, advocating legislative reforms for the inequitable conduct defense to infringement. Also, *amicus* chaired a regional bar association IP section, and presents legal education programs on patent-related topics.

---

entity, other than the *amicus* made any financial contribution to the preparation or submission of this *amicus* brief.

STATEMENT OF THE CASE

SIGNIFICANT ASPECTS OF THE DECISIONS BELOW.

In the District Court, obviousness was decided on a motion for summary judgment.

The Federal Circuit reversed for a lack of adequate findings, specifically, findings inadequate to support the lower court's conclusion about a teaching, motivation, or suggestion in the prior art to combine references.

Thus, this case can be viewed simply as a decision based on an "incomplete analysis" or on inadequate record, which the Circuit Court ruled should be developed fully.

SUMMARY OF ARGUMENT

The Federal Circuit ruling that the lower court did not make adequate findings to support a summary judgment of obviousness should be affirmed, and the case remanded for further findings.

The Petitioner contends that evidence of a teaching, motivation, or suggestion to combine the prior art is *irrelevant* to a determination of obviousness. Proof about any extant teaching, motivation, or suggestion to combine the prior art is *relevant* evidence, about which well-developed findings should be made, before a duly-issued patent is declared obvious.

Suggestions from Petitioner and *amici* to abandon reliance on evidence of a teaching, motivation, or suggestion to combine are misplaced, or require legislative action. Instead, this Court should favorhaving obviousness rulings reviewed for an abuse of discretion, as are all equitable determinations.

ARGUMENT

1. AMPLE GROUNDS TO AFFIRM.

This Court could affirm the Circuit Court on several grounds, primarily, that a summary judgment of obviousness cannot rest on inadequate findings, or issues open to dispute.

The Petitioner contends that evidence of a teaching, motivation, or suggestion to combine the prior art is irrelevant to a determination of obviousness. On that premise, the Petitioner argues that the District Court need not make further findings.

The District Court narrowed the inquiry to the "nature of the problem to be solved." The Federal Circuit noted that, and reversed because the lower court "applied an incomplete" test of whether the prior art contains a teaching, motivation, or suggestion, either explicitly or implicitly, to make the patented combination.

This Court should affirm because assessing whether, or not, the prior art provided any teaching, motivation, or suggestion to combine known elements, is relevant evidence, about which complete findings should be made in every obviousness case.

That evidence is relevant to the "content of" the prior art, and it fleshes out whether the "differences" were obvious, or not. If that evidence can be presented, or if none can be shown, then that shows obviousness, or non-obviousness. Probative evidence should never be ignored, especially when the grant of a duly examined and issued patent is being challenged.

Here, the District Court findings may be deemed inadequate to review whether a teaching, motivation, or suggestion existed in the prior art, explicitly, or implicitly, or whether that evidence was not genuinely in dispute.

2. Novel Combinations, Even Those Non-Pioneering Combinations, Are Entitled to Patent Protections, Including the Presumption of Validity.

The question here, is presented when the invention comprises known elements, in a non-obvious combination. Being known, the elements come within the "scope and content" of the prior art. The unknown is whether combining those known elements involved novel or innovative "differences" that were not obvious to a person of skill at the time of invention. *Dann v. Johnston*, 425 U.S. 219 (1976).

Petitioner would merge the "differences" aspect with the "skill" aspect, into one inquiry about whether the skill existed for persons to perceive making the combination, before the time that the combination actually was made.

The better approach is to require evidence that shows a teaching, motivation or suggestion in the prior art, explicit or implicit, because that evidence tends to prove whether the inventive differences were obvious, or not.

Eliminating a need for evidence about a teaching, motivation or suggestion to make the combination will reduce the obviousness inquiry to a swearing match over how skilled, or how innovative persons were, at the time of invention.[2]

3. AFFIRMANCE IS WARRANTED UNDER THE STANDARD OF REVIEW APPROPRIATE TO RULE 56 RULINGS, AS WELL AS, UNDER THE REVIEW STANDARD APPLIED TO EQUITABLE DECREES.

Whenever a District Court makes inadequate

---

2 The comparative example is §102)(b) invalidity, where corroboration is needed in addition to testimony about the existence of the subject matter in the prior art. *The Barbed Wire Case*, 143 U.S. 275 (1892). A proven teaching, motivation or suggestion convincingly shows that the "differences," between the claimed combination and the uncombined elements in the prior art, would have been "obvious at the time" of the invention.

findings, or if its §103(a) assessment is "incomplete," then a summary judgment of invalidity should not stand. In every case, a summary judgment of obviousness based on testimony, or a conclusion, that proclaims 'it looks obvious to me' is neither a clear, nor a convincing ground to invalidate a duly-examined and issued patent. Here, the Circuit Court should be affirmed based on the threshold review standard of whether adequate findings or an adequate record exists to grant a Rule 56 motion.

Many frustrations were expressed about the Federal Circuit's jurisprudential role, by the Petitioner and its *amici*. In the undersigned's opinion, many of these concerns are borne from the multivariate standards used to review patent validity decisions of district courts. The multi-tier appellate review standards enable the Circuit Court to nullify, or ignore, all of the work done in the district court to determine obviousness.

Before undertaking any validity conclusion, the initial issue of claim interpretation will undergo *de novo* review. Then, the four *Graham v. Deere* inquiries are reviewed for clear error. Next, the conclusion about obviousness is reviewed *de novo*. Add to that, in the present case, that a grant of summary judgment is reviewed *de novo*, and a denial of summary judgment is reviewed for abuse of

discretion. *Cross Med. Prods., Inc., v. Medtronic Sofamor Danek, Inc.*, 424 F.3d 1293 (Fed. Cir. 2005).

There too are the necessarily included appellate review standards for whether a reference qualifies as prior art; for what bounds "the art to which" the inventive subject matter pertains," and for "analogous" arts; and, the review standard applied to what education and experience qualify a "person having ordinary skill" in the art.

This multivariate approach to appellate review should be supplanted, in recognition of obviousness being an equitable inquiry, with the singular standard of "reviewable on appeal for an abuse of discretion." *eBay v. MercExchange*, 547 U.S. ___, 126 S.Ct. 1837 (2006).

4. INVALIDATING A PATENT UPON A SHOWING OF OBVIOUSNESS IS AN EQUITABLE REMEDY.

The Petitioner and several *amici* operate from a premise that the obviousness inquiry traditionally was decided in the law courts. This *amicus* questions that. An invalidity challenge to a patent "is equitable" in its origins. *Tegal Corp. v. Tokyo Electron America, Inc.*, 237 F.3d 1331 (Fed. Cir. 2001), and *In re Technology Licensing*, 423 F.3d 1286 (Fed. Cir. 2005). A challenge to the validity of

a duly issued patent seeks equitable relief in the form of a declaratory judgment.

The statute, 35 U.S.C. §103(a), recites equitable factors, not tangible evidence, which "as a whole" suggest that an invention may have been obvious, and if so, that warrants a duly-issued patent being declared invalid. These statutory factors require a *post-hoc* assessment of "the prior art" viewed, as of the "time the invention was made," by a hypothetical "person having ordinary skill in the art." To posit these evaluative factors against a "presumption of validity," to reach a clear and convincing conclusion about whether to declare a patent invalid, is a pure exercise in equitable jurisprudence.

Based on a historical test, or on the measure of relief sought, an action to declare a patent invalid for obviousness seeks an equitable remedy. The English ancestor of a §103(a) claim is the writ of *scire facias*. As summarized by Blackstone, "WHERE the crown hath unadvi*f*edly granted any thing by letters patent, which ought not to be granted, ...the remedy to repeal the patent is by writ of *f*cire facias in chancery" *Blackstone's Commentaries on the Laws of England*, Book III – Chapter 17. The writ of *scire facias* enabled a citizen, who challenged an issued patent based on prior art, to have it declared invalid

by the Court of Chancery. Moreover, the modern action for a declaration that a patented invention is obvious seeks no monetary or legal relief.[3] "The distinguishing characteristics of legal remedies are their uniformity, their unchangeableness or fixedness, their lack of adaptation to circumstances, and the technical rules which govern their use." JOHN N. POMEROY, A Treatise on Equity Jurisprudence, §109 (4th ed. 1918).

If the governing rules were to be changed, based on the issues as presented here, then this *amicus* respectfully suggests that change be that obviousness determinations would be reviewed according to the standard applied to equitable rulings.

As applied to the present case, the Federal Circuit ruling of inadequate findings or of an incomplete analysis in the lower court, would be affirmed, based on standards that apply to review of summary judgments under Rule 56. However, following remand and full development of the record in the

---

3 Prior to 1819, the enabling statute vested federal courts with power in patent suits heard at law. Act of April 17, 1800 (2 Stat. 37). Then, that jurisdiction was extended to equity actions. Act of February 19, 1819 (3 Stat. 481). *Campbell v. City of Haverhill,* 155 U.S. 610 (1895).

District Court, that lower court's ruling on whether the patent claims a non-obvious invention, if later appealed, would be reviewed under the abuse of discretion standard. Under either standard, a conclusion based on inadequate findings would be error, because Rule 56 requires more, or because in equity that is an abuse of discretion.

The standard of review for equitable determinations promotes a full development of the record in the District Court, and provides more predictability on appeal. The statute creating the Federal Circuit Court of Appeals sought to assure that all district courts would uniformly rule on patent law issues. Those who counsel patentees, and counsel their competitors, prefer that *predictability* be the touchstone. Predictability in patent matters derives from deliberative adjudication, based on uniform principles, including a singular standard of review. Otherwise predictability may be diffused by widely-applied standards of appellate review.

5. PETITIONER AND *AMICI* PROPOSE CHANGES TO PRECEDENT THAT REQUIRE LEGISLATIVE ACTION.

The merits brief of Petitioner, and its supporting *amici*, propose to eliminate provisions of the Patent Act, and wholly to overrule precedent.

The Petitioner's challenge to the factors set out by the Federal Circuit can be assessed on several levels. Petitioner argues that the suggestion, motivation, or teaching to combine distinct references should not be factored into the obviousness analysis. Its arguments against any single, 'litmus test' asks too much, or goes too far. However, Petitioner perhaps argues that obviousness may be proven, based on §103(a) as interpreted in *Graham v. Deere*, even when no explicit teaching, motivation or suggestion to combine distinct references can be shown. Now though, the Federal Circuit caselaw permits alternative ways to show motivation to combine. *Cross Med. Prods., Inc., supra*, or which collapses the inquiry into a measure of the prior art "as a whole." *In re Napier*, 55 F.3d 610 (Fed. Cir. 1995).

This essential point is variously stated by the *amici* supporting the Petitioner. The brief of *amici* AARP, etc., contends that the Federal Circuit demands the patented combination to "be explicitly suggested previously" in the prior art. The Solicitor General refers to the "rigid test" (pg. 15) of the Federal Circuit, which most recently referred to its "non-rigid" test. *Alza Corp. v. Mylan Labs*, 2006 WL 2556356 (Fed. Cir. Sept. 9, 2006). Circuit precedent, which admits proof of the inventive combination

having been taught or been suggested, explicitly or implicitly, or having been motivated by the nature of the problem, enables the lower courts to develop and assess a full record that takes account of all the best evidence of obviousness.

To eliminate consideration of all such evidence is ill-advised, or is a change to the law that should come from Congress.

- The *amici* law and history Professors propose a 'window' of inventiveness open for a "reasonable time" following the date of the claimed invention, and to "shift the burden" to the patentee, and to eliminate the "clear and convincing" standard as to uncited prior art.
- *Amici* IBM proposes a "rebuttable presumption" which may erode the legislative intent of §282.

These proposals may go beyond the procedural status of the case at bar. Others propose changes to the text or to the application of the Patent Act that more properly are directed to Congress.

- Petitioner would remove from consideration evidence that distinguishes the §103 obviousness standard from that for §102 anticipation. The "mere existence of differences between the prior art and an invention does not establish the invention's nonobviousness." *Dann, supra* at 230. *See, fn. 2, supra.*

- The suggestion of *amici* Intel and Micron is a standard that allows patents for pioneering or "truly novel" inventions, and denies patents for "comparatively straightforward combinations." Those too are better cast as proposals for legislative action, rather than for application of the existing statute.

Other *amici* in support of Petitioner are not in agreement about the contours and application of teaching, suggestion or motivation test.

- *Amici* Colianni expressed concern that aspects of the test get an "incorrect emphasis".
- The brief of *amici* Business Software Alliance suggests that a more "flexible and content-specific" inquiry should overlay the teaching, suggestion or motivation test.
- *Amici* Professors Strandburg, *et al*, and General Motors advocate that the focus move from the §103(a) factor of "prior art" to consider the provable "skill in the art" at the time of invention. All this may do is have competing trial experts testify that skilled person would deem a combination obvious, where now the focus is on more empirical evidence of what combinations actually were known, shown, or suggested in the relevant prior art. These *amici* proposals suggest that district judges, or the litigants presenting the evidence, fail to give enough

regard to a showing of what a person of ordinary skill would have known at the time of invention.

■ Petitioner and various *amici* are troubled that an accused infringer might encounter difficulty in obtaining a summary judgment of obviousness. That, perhaps, results from the clear and convincing standard of proof, rather than the precise issue at bar.

These proposals expand on the question presented here, or suggest legislative action on the Patent Act to remedy various concerns.

In conclusion, the undersigned *amicus* respectfully submits that evidence, explicit or implicit, that proves the existence or absence of a teaching, suggestion or motivation to combine the prior art should remain a factor essential to the obviousness inquiry. The test is workable, and has served the patenting regime well, for years. If a change is needed, then thought should be given to having obviousness determinations, based on a complete record, be reviewed under the equitable standard of an abuse of discretion.

> "Knowledge after the event is always easy, and problems once solved present no difficulties, indeed, may be represented as never having had any, and expert witnesses may be brought forward to show that the

> new thing which seemed to have eluded the search of the world was always ready at hand and easy to be seen by a merely skillful attention. "But the law has other tests of the invention that subtle conjectures of what might have been seen and yet was not." *Diamond Rubber Co. v. Consolidated Rubber Tire Co.*, 220 U.S. 428, 435 (1911).

Obviousness should include evidence of any teaching, motivation or suggestion to combine elements, because that proves what might have been combined, and "yet was not."

CONCLUSION.

Adequate consideration of evidence, or a lack of evidence, as to whether a teaching, motivation or suggestion to combine previously known elements existed as of the time of invention is fully in accord with the text of §103(a), and with the equitable determination required to invalidate a patent as obvious.

For these reasons, the ruling of the Federal Circuit Cout of Appeals should be affirmed.

Dated: Sept. 25, 2006

Respectully submitted,

LEE THOMASON
SPALDING & THOMASON
106 North 4th St.
Bardstown, KY 40004
(502) 349-7227
Amicus Curiae and Counsel

561 M

Supreme Court, U.S.
FILED
AUG 2 2 2006
OFFICE OF THE CLERK

No. 04-1350

IN THE

Supreme Court of the United States

KSR INTERNATIONAL CO.,
Petitioner,

v.

TELEFLEX INC. and TECHNOLOGY HOLDING CO.,
Respondents.

On Writ of Certiorari to the United States Court of Appeals for the Federal Circuit

BRIEF FOR *AMICI CURIAE* TIME WARNER INC., IAC/INTERACTIVE CORP., AND VIACOM, INC. IN SUPPORT OF PETITIONER

KATHLEEN M. SULLIVAN
Counsel of Record
DANIEL H. BROMBERG
BRIAN C. CANNON
QUINN EMANUEL URQUHART
OLIVER & HEDGES, LLP
555 Twin Dolphin Drive,
Suite 560
Redwood Shores, CA 94065
(650) 801-5000

Counsel for Amici Curiae

August 22, 2006

WILSON-EPES PRINTING CO., INC. – (202) 789-0096 – WASHINGTON, D. C. 20001

TABLE OF CONTENTS

	Page
TABLE OF AUTHORITIES	iii
INTERESTS OF *AMICI CURIAE*	1
SUMMARY OF ARGUMENT	3
ARGUMENT	5
I. BY REPLACING THE FLEXIBLE, TECHNOLOGY-SPECIFIC ANALYSIS REQUIRED BY THIS COURT'S PRECEDENTS AND THE PATENT ACT WITH A RIGID EVIDENTIARY RULE, THE FEDERAL CIRCUIT HAS MADE IT TOO DIFFICULT TO PROVE MANY HIGH TECH PATENTS OBVIOUS	5
A. This Court's Precedents And The Patent Act Call For Flexible And Technology-Specific Proof of Obviousness	6
B. The Federal Circuit Has Required a Rigid Evidentiary Rule In Place Of The Flexible And Technology-Specific Approach	9
C. Many Technologies Do Not Produce Documentary Evidence Suited To The Federal Circuit's Rigid Evidentiary Rule	10
II. THE FEDERAL CIRCUIT'S INFLEXIBLE TEST FOR EVIDENCE OF OBVIOUSNESS UNDERMINES THE PATENT SYSTEM	17
A. A Flexible Approach To Obviousness Is An Important Check On Over-Reaching Patents	18
B. An Inflexible Approach To Obviousness Distorts Innovation	19

TABLE OF CONTENTS—Continued

Page

C. An Inflexible Approach To Obviousness Distorts Patent Litigation 21

D. A Flexible Approach To Obviousness Will Not Subject Patentees To Improper Hindsight Bias 24

CONCLUSION 27

TABLE OF AUTHORITIES

CASES Page

AT&T Corp. v. Excel Communications, Inc., 172 F.3d 1352 (Fed. Cir. 1999) 14
Adams v. Bellaire Stamping Co., 141 U.S. 539 (1881) 7
Anderson's-Black Rock, Inc. v. Pavement Salvage Co., 396 U.S. 57 (1969) 7
Aronson v. Quick Point Pencil Co., 440 U.S. 257 (1979) 21
Aventis Pharma Deutschland GMBH v. Lupin Ltd., No. 2:05CV421, 2006 WL 2008962 (E.D.Va. July 17, 2006) 23
Bonito Boats, Inc. v. Thunder Craft Boats, Inc., 489 U.S. 141 (1989) 17
Calmar, Inc. v. Cook Chem. Co., 383 U.S. 26 (1966) 7
Dann v. Johnston, 425 U.S. 219 (1976) 7
eBay v. MercExchange, 126 S. Ct. 1837 (2006) 24
Gemstar-TV Guide Int'l, Inc. v. Int'l Trade Comm., 383 F.3d 1352 (Fed. Cir. 2004) 24
Graham v. John Deere Co., 383 U.S. 1 (1966) .5, 6, 7, 18
Great Atl. & Pac. Tea Co. v. Supermarket Corp., 340 U.S. 147 (1950) 5, 7
Hailes v. Van Wormer, 87 U.S. 353 (1874) 7
Hotchkiss v. Greenwood, 52 U.S. (11 How.) 248 (1850) 5, 7, 26
In re Conrad, 439 F.2d 201 (C.C.P.A. 1971) 8
In re Dembiczak, 175 F.3d 994 (Fed.Cir.1999) 24
In re Lee, 277 F.3d 1338 (Fed. Cir. 2002) 10
In re McLaughlin, 443 F.2d 1392 (C.C.P.A. 1971) 8, 11
In re Sernaker, 702 F.2d 989 (Fed. Cir. 1983) 9
In re Sheckler, 438 F.2d 999 (C.C.P.A. 1971) 8, 11

TABLE OF AUTHORITIES—Continued

	Page
Lincoln Eng'g Co. v. Stewart-Warner Corp., 303 U.S. 545 (1938)	7
Mazer v. Stein, 347 U.S. 201 (1954)	21
McGinley v. Franklin Sports, Inc., 75 F. Supp. 2d 1218 (D. Kan. 1999)	22
McGinley v. Franklin Sports, Inc., 92 F. Supp. 2d 1216 (D. Kan. 2000)	22
McGinley v. Franklin Sports, Inc., 262 F.3d 1339 (Fed. Cir. 2001)	22
Merck & Co., Inc. v. Teva Pharmaceuticals USA, Inc., 395 F.3d 1364 (Fed. Cir. 2005)	11
Mid-State Fertilizer v. Exchange Nat'l Bank, 877 F.2d 1333 (7th Cir. 1989)	26
Neato, LLC v. Rocky Mountain Traders, 138 F. Supp. 2d 245 (D. Conn. 2001)	22
Princeton Biochemicals, Inc. v. Beckman Coulter, Inc., 411 F.3d 1332 (Fed. Cir. 2005)	11
Reckendorfer v. Faber, 92 U.S. 347 (1876)	7
Reeves Instrument Corp. v. Beckman Instruments, Inc., 444 F.2d 263 (9th Cir. 1971)	9
Remington Arms Co., Inc. v. Modern Muzzleloading, Inc., No. 2:97CV00660, 1999 WL 281341 (M.D.N.C. Feb. 9, 1999)	22
Sakraida v. AG Pro, Inc., 425 U.S. 273 (1976)	5
Sibia Neurosciences, Inc. v. Cadus Pharmaceutical Corp., 225 F.3d 1349 (Fed. Cir. 2000)	11
Simmons, Inc. v. Bombardier Inc., 328 F. Supp. 2d 1188 (D. Utah 2004)	22
State Street Bank & Trust Co. v. Signature Fin. Group, 149 F.3d 1368 (Fed. Cir. 1998)	14
Toledo Pressed Steel Co. v. Standard Parts, Inc., 307 U.S. 350 (1939)	7

TABLE OF AUTHORITIES—Continued

	Page
United States v. Adams, 383 U.S. 39 (1966)	7, 26
White v. Samsung Elecs. Am. Inc., 989 F.2d 1512 (9th Cir. 1993)	24
CONSTITUTIONS, RULES AND STATUTES	
U.S. CONST. art. I, § 8, cl. 8	17
35 U.S.C. § 101	18, 19
35 U.S.C. § 102	18, 19
35 U.S.C. § 103(a)	5, 6, 7, 8
FED. R. EVID. 702	26
BOOKS, ARTICLES AND OTHER MATERIALS	
Allison, John R. & Lemley, Mark A., *The Growing Complexity of the United States Patent System*, 82 B.U. L. REV. 77 (2002)	12
Apple iPod, http://www.apple.com/ipod/ipod.html	12
Burk, Dan L. & Lemley, Mark A., *Is Patent Law Technology Specific?*, 17 BERKELEY TECH. L.J. 1155 (2002)	8, 12
CERUZZI, PAUL E., A HISTORY OF MODERN COMPUTING (2d ed. 2003)	14, 15
Chan, Jeremiah & Fawcett, Matthew, *Footsteps of the Patent Troll*, 10 INTELL. PROP. L. BULL. 1 (2005)	18
Cohen, Julie E., *Reverse Engineering and the Rise of Electronic Vigilantism: Intellectual Property Implications of "Lock-Out" Programs*, 68 S. CAL. L. REV. 1091 (1995)	15
Cohen, Julie E. & Lemley, Mark A., *Patent Scope and Innovation in the Software Industry*, 89 CAL. L. REV. 1 (2001)	14, 15

TABLE OF AUTHORITIES—Continued

Page

COMMITTEE ON INTELLECTUAL PROPERTY RIGHTS IN THE KNOWLEDGE-BASED ECONOMY, NATIONAL RESEARCH COUNCIL, A PATENT SYSTEM FOR THE 21ST CENTURY (Stephen Merrill *et al.*, eds, 2004) 23

Corporate Brief, NAT'L L.J., NOV. 13, 2000 24

Eisenberg, Rebecca S., *Obvious to Whom? Evaluating Inventions from the Perspective of PHOSITA*, 19 BERKELEY TECH. L.J. 885 (2004) .. 8, 9, 14

Fahey, Jonathan, *Screen Grab*, FORBES, Mar. 5, 2001 24

Federal Circuit Bar Association Model Patent Jury Instructions, No.10.9.2 9

Free Software Foundation, Inc., *GNU Pascal Coding Standards*, http://www.gnu-pascal.de/h-gpcs-en.html#index-trivial-comments-34 16

Hall, Bronwyn H. & Ziedonis, Rosemarie Ham, *The Patent Paradox Revisited: An Empirical Study of Patenting in the U.S. Semiconductor Industry, 1979-1995*, 32 RAND J. ECON. 101 (2001) 17

Harris, Robert W., *Prospects for Supreme Court Review of the Federal Circuit Standards for Obviousness of Inventions Combining Old Elements*, 68 J. PAT. & TRADEMARK OFF. SOC'Y 66 (1986) 19

Internet Archive, Wayback Machine, http://www.archive.org/web/web.php 12, 13

JAFFE, ADAM B. & LERNER, JOSH, INNOVATION AND ITS DISCONTENTS (2004) 22

KERNIGHAN, BRIAN W. & PLAUGER, P.J., THE ELEMENTS OF PROGRAMMING STYLE (2d. ed. 1978) 16

TABLE OF AUTHORITIES—Continued

Page

KERNIGHAN, BRIAN W. & PIKE, ROB, THE PRACTICE OF PROGRAMMING (1999) 16

Long, Clarissa, *Patent Signals*, 69 U. CHI. L. REV. 625 (2002) 18

McGuire, Joshua, *Nonobviousness: Limitations on Evidentiary Support*, 18 Berkeley Tech. L.J. 175 (2003) 9

Mister Peabody, http://en.wikipedia.org/wiki/Mr._Peabody 13

MOODY, GLYN, REBEL CODE: LINUX AND THE OPEN SOURCE REVOLUTION (2001) 15

Moore, Kimberly A., *Worthless Patents*, 20 BERKELEY TECH. L. J. 1521 (2005) 18

NCBI PubMed, http://www.ncbi.nlm.nih.gov/entrez/ query.fcgi?DB=pubmed 11

REID, ROBERT H., ARCHITECTS OF THE WEB (1997) 12, 13

SCHACHT, WENDY H. & THOMAS, JOHN R., CONGRESSIONAL RESEARCH REPORT: PATENT REFORM: INNOVATION ISSUES (2005) 22

Shapiro, Carl, *Navigating the Patent Thicket: Cross Licenses, Patent Pools, and Standard-Setting*, *in* 1 INNOVATION POLICY AND THE ECONOMY 119 (Adam Jaffe *et al.*, eds., 2000) .. 21

Thomas, John R., *Formalism at the Federal Circuit*, 52 AM. U. L. REV. 771 (2003) 19

USPTO, PERFORMANCE AND ACCOUNTABILITY REPORT: FISCAL YEAR 2005 13

Windows History, http://www.microsoft.com/windows/WinHistoryProGraphic.mspx 15

IN THE

Supreme Court of the United States

No. 04-1350

KSR INTERNATIONAL CO.,
Petitioner,

v.

TELEFLEX INC. and TECHNOLOGY HOLDING CO.,
Respondents.

On Writ of Certiorari to the United States Court of Appeals for the Federal Circuit

BRIEF FOR *AMICI CURIAE* TIME WARNER INC., IAC/INTERACTIVE CORP., AND VIACOM, INC. IN SUPPORT OF PETITIONER

INTERESTS OF *AMICI CURIAE*[1]

Amici are leading providers of goods and services in various high technology fields. As owners of thousands of valuable patents, *amici* frequently seek to enforce or to license patents. *Amici* also have licenses to use other patents, and frequently they are the object of infringement claims and litigation. *Amici* therefore have a strong interest in ensuring that patent law and in particular the laws governing the validity of patents are applied in a fair and balanced fashion.

[1] Counsel for both parties have consented to the filing of this brief, and their consents have been filed with the Clerk of this Court. No counsel for either party had any role in authoring this brief, and no person other than the named *Amici* and their counsel has made any monetary contribution to the preparation and submission of this brief. *See* Rule 37 & 37.6.

Amicus Time Warner Inc. is a leading global media and entertainment company with businesses in filmed entertainment, interactive services, television networks, cable systems and publishing media, including America Online, Time Warner Cable, Time Inc., HBO, Turner Broadcasting System and Warner Bros. Entertainment. A frequent innovator in the area of high technology, Time Warner has pioneered such industry-shifting products as the DVD and digital cable, and it holds numerous patents.

Amicus IAC/InterActiveCorp is a diversified e-commerce company whose businesses are leaders in numerous sectors of the Internet economy. IAC's operating businesses include Ask.com, Citysearch, Entertainment Publications, Evite, Gifts.com, HSN, Interval International, LendingTree, Match.com, ServiceMagic, and Ticketmaster. IAC/InterActiveCorp holds many patents in areas such as Internet communications and business solutions.

Amicus Viacom, Inc. is one of the leading global entertainment content companies. Offering programming and content for television, motion pictures and digital platforms, Viacom's world-class brands include MTV Networks (MTV, VH1, Nickelodeon, Nick at Nite, Comedy Central, CMT: Country Music Television, Spike TV, TV Land, Logo, and more than 120 networks around the world), BET Networks, Paramount Pictures, Paramount Home Entertainment, DreamWorks, MTV Films, Nick Movies, and Famous Music. Viacom uses patented technologies in providing its programming services and content.

Amici are concerned by the Federal Circuit's test implementing the "nonobviousness" requirement in Section 103 of the Patent Act, 35 U.S.C. § 103(a), by requiring proof of teaching, suggestion, or motivation in the prior art. Although this test may appear flexible, in practice it is implemented in a rigid fashion that requires obviousness to be proven through evidence of published suggestions. Because there is little publication of innovation in many high tech fields, this test

effectively eliminates the obviousness defense in those fields. *Amici* therefore urge that the Federal Circuit's test be rejected and replaced by the more flexible approach mandated by the plain language of Section 103 and the controlling decisions of this Court.

SUMMARY OF ARGUMENT

The patent system aims to reward genuine innovation. Thus, under this Court's longstanding precedents as codified in the Patent Act of 1952, a patent may not issue if the claimed invention would have been obvious to a person of ordinary skill in the relevant art. By its very terms, this standard is technology-specific. To determine whether an invention is obvious, a patent examiner or a court must step into the shoes of a person skilled in the relevant art. Different arts involve different skills. Proof of obviousness thus may be expected to vary with the different customs and practices of different fields.

Departing sharply from precedent, however, the Federal Circuit has abandoned such a flexible and technology-specific approach in favor of a rigid and uniform evidentiary test. To show obviousness, the Federal Circuit requires "specific findings showing a teaching, suggestion, or motivation to combine prior art teachings in the particular manner claimed by the patent at issue." Pet. App. 16a. Meeting that burden, the Federal Circuit has held, requires detailed objective "evidence of record" rather than reliance on "common sense" or any of the other factors this Court has deemed relevant to obviousness.

This strict evidentiary requirement biases the obviousness inquiry in favor of pre-existing evidence that is documented or otherwise publicly accessible. Some fields customarily generate such evidence, for example through government regulatory submissions, peer-reviewed journals, or published patents. But other fields, with different traditions and market structures, do not record their advances in this manner.

In many high technology fields, technological advances are often not well recorded in academic or industry journals or decades of published patents. In fields such as computer data processing, Internet commerce, software-based business methods and digital media, for example, technology advances through rapid electronic exchanges of information with minimal traditional documentation. Many emerging fields evolve so quickly that patents and printed articles cannot keep up with the latest developments. In such fields, it is difficult to satisfy the Federal Circuit's rigid evidentiary test even when a claimed "invention" would have been perfectly obvious to one skilled in the field.

By making it too difficult to prove obviousness in such fields, the Federal Circuit's approach distorts the patent system. The obviousness requirement provides a crucial check on dubious patents because the other requirements for patentability—utility and novelty—are easily satisfied by patent attorneys acting *ex parte* at the Patent Office. If obviousness is too hard to prove in areas of emerging technology, those areas will quickly become clogged with dubious patents that impede future innovation, devaluing actual advances and defeating the underlying objective of the patent laws. And if it becomes virtually impossible to prevail on obviousness on summary judgment, then expensive trials or excessive settlements will burden both the economy and the judicial system.

For these reasons, this Court should reject the Federal Circuit's rigid requirement and return to a more flexible approach that allows courts to consider different evidence of obviousness as appropriate for different technologies. Documentary evidence of a prior teaching, motivation or suggestion to combine elements should remain relevant to the obviousness inquiry. In fields like medicine and biotechnology where advances are heavily documented, such evidence might well be dispositive in assessing claims of obviousness. But in other

fields where advances are not heavily documented, the obviousness of a patent to a person of ordinary skill in the field should be provable by other means.

ARGUMENT

I. BY REPLACING THE FLEXIBLE, TECHNOLOGY-SPECIFIC ANALYSIS REQUIRED BY THIS COURT'S PRECEDENTS AND THE PATENT ACT WITH A RIGID EVIDENTIARY RULE, THE FEDERAL CIRCUIT HAS MADE IT TOO DIFFICULT TO PROVE MANY HIGH TECH PATENTS OBVIOUS

Because the patent system seeks to reward only genuine innovation, patent-worthy inventions must be not only new and useful, but also not obvious to a person of ordinary skill in the relevant art. As this Court has held for well over a century, a patent applicant must evidence "more ingenuity and skill than were possessed by an ordinary mechanic acquainted with the business . . . ." *Graham v. John Deere Co.*, 383 U.S. 1, 11 (1966) (citing *Hotchkiss v. Greenwood*, 52 U.S. (11 How.) 248, 267 (1851)). The power to reject a patent as obvious helps to protect future innovation. "A patent for a combination that only unites old elements with no change in their respective functions . . . obviously withdraws what already is known into the field of its monopoly and diminishes the resources available to skillful men. . . ." *Sakraida v. AG Pro, Inc.*, 425 U.S. 273, 281 (1976) (quoting *Great Atl. & Pac. Tea Co. v. Supermarket Corp.*, 340 U.S. 147, 152 (1950)).

The Patent Act of 1952 codified the longstanding *Hotchkiss* test, as elaborated in this Court's later decisions, by specifying that a patent must not be obvious to a person of ordinary skill in the relevant art. It provides:

> A patent may not be obtained . . . if the differences between the subject matter sought to be patented and the

> prior art are such that the subject matter as a whole would have been obvious at the time the invention was made to a person having ordinary skill in the art to which said subject matter pertains.

35 U.S.C. § 103(a). *See Graham*, 383 U.S. at 17 (noting that this "section was intended merely as a codification of judicial precedents").

The obviousness inquiry called for by this Court's precedents and the Patent Act is flexible and technology-specific. It requires stepping into the shoes of a person skilled in the relevant art at the time the invention was made. The Federal Circuit, however, has jettisoned such a flexible approach in favor of a rigid, uniform evidentiary test requiring detailed objective evidence of a prior teaching, suggestion or motivation. This newly created requirement not only defies precedent and statutory language, but biases the obviousness inquiry toward documentary evidence of innovation. In high technology fields like digital media, Internet commerce and computer-based data communication, however, rapid advances are not recorded in peer-reviewed journals or government regulatory submissions. The Federal Circuit's rigid evidentiary test thus makes it unnecessarily difficult to prove obviousness in such fields.

A. This Court's Precedents And The Patent Act Call For Flexible And Technology-Specific Proof Of Obviousness

Under this Court's longstanding precedents, determining obviousness calls for a practical, "functional approach" that compares what is known according to the "background skill of the calling" with the patent applicant's claim of a new invention. *Graham*, 383 U.S. at 12. Such an approach is necessarily technology-specific. It requires stepping into the shoes of a person of ordinary skill in the particular field at the time of the invention, and asking whether such a person

would be routinely capable of devising the allegedly inventive method or device.

Since custom, practice, and knowledge base differs in different fields, there is no reason to expect that the sources of such capability will all be similar. As this Court has cautioned, "What is obvious is not a question upon which there is likely to be uniformity of thought in every given factual context." *Graham*, 383 U.S. at 18. To the contrary, "background skill" will vary with the "calling" in question. A person skilled in one field might understand the routine nature of an alleged advance based on quite different sources, practices and techniques than a person skilled in another field.

Accordingly, this Court has applied the obviousness requirement in a flexible fashion. The seminal *Graham* decision identified three primary inquiries in determining obviousness: "the scope and content of the prior art," the "difference between the prior art and the claims at issue," and the "level of ordinary skill in the pertinent art." 383 U.S. at 17-18. Additionally, the Court noted that certain "secondary considerations" that might be "indicia of nonobviousness," such as "commercial success, long felt but unsolved needs, failure of others, etc." might be relevant. *Id.* But in every case, this Court has approached the technology at issue on its own terms.[2]

The text of the Patent Act likewise embodies such a technology-specific approach. Section 103(a), by looking to

---

[2] *See Dann v. Johnston*, 425 U.S. 219, 229-30 (1976); *Anderson's-Black Rock, Inc. v. Pavement Salvage Co.*, 396 U.S. 57, 60-61 (1969); *United States v. Adams*, 383 U.S. 39, 51-52 (1966); *Calmar, Inc. v. Cook Chem. Co.*, 383 U.S. 26, 35 (1966); *Great Atl. & Pac. Tea Co.*, 340 U.S. at 151-52; *Toledo Pressed Steel Co. v. Standard Parts, Inc.*, 307 U.S. 350, 356 (1939); *Lincoln Eng'g Co. v. Stewart-Warner Corp.*, 303 U.S. 545, 549 (1938); *Adams v. Bellaire Stamping Co.*, 141 U.S. 539, 542 (1891); *Reckendorfer v. Faber*, 92 U.S. 347, 357 (1876); *Hailes v. Van Wormer*, 87 U.S. 353, 368 (1874); *Hotchkiss*, 52 U.S. (11 How.) at 265-67.

the perspective of a "person having ordinary skill *in the art*," 35 U.S.C. § 103(a) (emphasis added), suggests by its very terms that evidence of obviousness will vary across the different skills appropriate to different arts. "Read for plain meaning, this language seems to call for evaluations of nonobviousness from the perspective of ordinary practitioners who are contemporaries of the inventor in the relevant technological community." Rebecca S. Eisenberg, *Obvious to Whom? Evaluating Inventions from the Perspective of PHOSITA*, 19 BERKELEY TECH. L.J. 885, 886 (2004).

The statute also calls for flexibility in determining obviousness in different fields. "The practicality of working in different technologies requires a flexible approach to determining . . . obviousness, and the PHOSITA [*i.e.*, "person having ordinary skill in the art"] approach gives a court that flexibility." Dan L. Burk & Mark A. Lemley, *Is Patent Law Technology Specific?*, 17 BERKELEY TECH. L.J. 1155, 1191 (2002).

Between the Patent Act's enactment and the creation of the Federal Circuit in 1982, this flexible, technology-specific approach to proof of obviousness was for the most part followed by the Federal Circuit's predecessor court, the Court of Customs and Patent Appeals (CCPA). Under the CCPA's decisions, "the test for combining references is not what the individual references themselves suggest but rather what the combination of disclosures taken as a whole would suggest to one of ordinary skill in the art." *In re McLaughlin*, 443 F.2d 1392, 1395 (C.C.P.A. 1971). Thus it was "not necessary" that the prior art "actually suggest, expressly or in so many words," the improvements made by the patent applicant. *In re Sheckler*, 438 F.2d 999, 1001 (C.C.P.A. 1971).[3]

---

[3] *See also In re Conrad*, 439 F.2d 201, 205 (C.C.P.A. 1971) (holding that "the test of obviousness is not express suggestion of the claimed invention in any or all of the [prior art] references but rather what the

B. The Federal Circuit Has Required A Rigid Evidentiary Rule In Place Of The Flexible And Technology-Specific Approach

Departing sharply from these precedents, "the Federal Circuit . . . has all but ignored the statutory directive that judgments of nonobviousness be made from the perspective of PHOSITA." Eisenberg, *supra*, at 888. Instead, the Federal Circuit has created a new rule of its own devising, requiring detailed and specific findings of prior teaching, suggestion or motivation to combine elements of prior art to create the invention claimed in the patent in question.[4]

Although on its face the requirement of a teaching, suggestion, or motivation might seem flexible enough, in practice this requirement has been applied in a rigid fashion that has raised the bar for proving obviousness for even the simplest inventions. *See, e.g., In re Sernaker*, 702 F.2d 989, 993-96 (Fed. Cir. 1983) (overturning Patent Office rejection of a patent as obvious, finding no prior suggestion to apply dye transfer techniques known in the textile art to embroidery with different colored threads). And it is being applied in rigid manner in the district courts. *See, e.g.,* Federal Circuit Bar Association Model Patent Jury Instructions, No.10.9.2 ("In deciding whether to combine what is described in the various items of prior art, you should keep in mind that there *must be some motivation or suggestion* for a skilled person

---

references taken collectively would suggest to those of ordinary skill in the art presumed to be familiar with them" (quotation omitted)).

[4] Most patents present combinations of pre-existing elements. "Innovations typically are a unique and creative combination of elements present in separate prior references." Joshua McGuire, *Nonobviousness: Limitations on Evidentiary Support*, 18 Berkeley Tech. L.J. 175, 175 (2003). *See, e.g., Reeves Instrument Corp. v. Beckman Instruments, Inc.*, 444 F.2d 263, 270 (9th Cir. 1971) (noting that "the vast majority [of mechanical or electrical devices], if not all, involve the construction of some new device (or machine or combination) from old elements").

to make the combination covered by the patent claims" (emphasis added)).

Raising the bar for proving obviousness still higher, the Federal Circuit's teaching-suggestion-motivation test has hardened in practice into a rigid requirement of some prior *published* suggestion of the combination in question. For example, in *In re Lee*, 277 F.3d 1338 (Fed. Cir. 2002), the Federal Circuit reversed the Patent Office's rejection of a patent application for adjusting a television screen's picture using an on-screen menu. The Patent Office had found that, to the "common sense of a person of ordinary skill in the art," it was obvious that one could combine a prior patent for an on-screen television menu with an on-screen picture-quality adjustment for a video game played on a television already illustrated in the game's handbook. The Federal Circuit, however, ruled that obviousness must be based on "objective evidence *of record*," and not upon "common sense." *Id.* at 1343 (emphasis added). Finding no specific published suggestion in the record, the Federal Circuit ruled the alleged "invention" patentable. *Id.* at 1341.

By biasing the obviousness inquiry in favor of pre-existing published evidence, the Federal Circuit's test in effect substitutes the perspective of the skilled librarian for that of the skilled practitioner of the technology in question. This turns the Patent Act on its head, destroying the flexibility specified by its terms.

C. Many Technologies Do Not Produce Documentary Evidence Suited To The Federal Circuit's Rigid Evidentiary Rule

The Federal Circuit's rigid test is especially ill-suited to the frenetic pace of development in many high technology fields. The test assumes that research and innovation proceeds principally in documented form. While this might be true of some fields, it is untrue of others. Where it is untrue, the Federal Circuit's test distorts the obviousness inquiry.

Medical fields, for example, are characterized by a culture of peer-reviewed journals, clinical trials, grant applications, and FDA regulatory submissions in which scientists report written research and results. The National Center for Biotechnology Information, for instance, maintains a database that includes over 4,800 journals and 16 million citations dating back to the 1950s.[5] In such a culture, patent obviousness may often be provable by readily available documentary evidence.[6]

Similarly, in other established fields such as construction and transportation, technological advances are typically documented in incremental sequences of published patents. *See, e.g., In re Sheckler*, 438 F.2d 999 (C.C.P.A. 1971) (upholding rejection of 1966 application for patent on masonry blocks as obvious in light of patents published in 1948 and 1960); *In re McLaughlin*, 443 F.2d 1392 (C.C.P.A. 1971) (upholding rejection of 1966 application for patent on arrangement for loading railroad boxcars as obvious in light of prior patents published in 1960, 1963 and 1965).

In many high technology fields, by contrast, the Federal Circuit's paradigm of an inventor drawing upon years of

---

[5] *See* NCBI PubMed, http://www.ncbi.nlm.nih.gov/entrez/ query.fcgi?DB=pubmed (last visited August 16, 2006). A search in the National Center's database for the human immunodeficiency virus (HIV) returns over 200,000 entries.

[6] For example, in *Princeton Biochemicals, Inc. v. Beckman Coulter, Inc.*, 411 F.3d 1332 (Fed. Cir. 2005), the Federal Circuit affirmed a district court's finding that a patent on a biochemical research device was obvious based on an article published in a scientific journal (the INT'L J. ON CHROMATOGRAPHY, ELECTROPHORESIS AND RELATED METHODS) and a published Ph.D. thesis. Similarly, in *Sibia Neurosciences, Inc. v. Cadus Pharmaceutical Corp.*, 225 F.3d 1349 (Fed. Cir. 2000), and *Merck & Co., Inc. v. Teva Pharmaceuticals USA, Inc.*, 395 F.3d 1364 (Fed. Cir. 2005), the Federal Circuit found patents in the biochemistry and pharmaceutical fields, respectively, to be obvious in light of published articles in scientific journals.

printed journal articles and prior patents simply does not exist. "[P]atent law has lost its primarily mechanical character, branching out into biotechnology, semiconductors, computer hardware and software, electronics, and telecommunications." Burk & Lemley, *supra*, at 1159 (citing John R. Allison & Mark A. Lemley, *The Growing Complexity of the United States Patent System*, 82 B.U. L. REV. 77, 87-90 (2002)).

In many of these fields, innovation is ever more rapid, and business cycles are increasingly short. Electronic devices such as personal computers and cellular phones (and the software that makes them function) that were cutting edge are quickly obsolete.[7] New developments are disseminated at speeds that outstrip conventional documentation. There is no need in these fields for developed bodies of published literature that would spell out teachings, motivations or suggestions in the manner required by the Federal Circuit's test. Consider the following examples:

Internet. Although the Internet might now seem essential, it is a very recent development. *See* ROBERT H. REID, ARCHITECTS OF THE WEB xx-xxi (1997). Begun as a military project in 1970, it opened for commercial use only in 1990. The basic building blocks of the World Wide Web were developed between 1991 and 1993, *id.* at xxv, and the Internet went from being an isolated novelty in 1997 to a ubiquitous tool by the end of 1999, *id.* at xxxiv-xxxv. Indeed, the Internet has developed so rapidly that web pages dating from less than a decade ago are considered ancient history.[8]

---

[7] For example, although the Apple iPod was introduced less than five years ago, it has already gone through five generations, four of which are no longer in production. *See* Apple iPod, http://www.apple.com/ipod/ipod.html (last visited Aug. 19, 2006).

[8] The Internet Archive maintains a website that permits users to browse through webpages archived since 1996. *See* Internet Archive, Wayback

These technical developments have not been extensively documented. The Internet is driven by market forces that leave knowledgeable participants little means, time or inclination to publish and share their knowledge. To begin with, the Internet is highly decentralized, connecting computers over networks operated by myriad independent companies.[9] Many of the companies that pioneered the Internet no longer exist or have been purchased by other companies. *See, e.g.*, REID, *supra*, at 1-2 and 357 (describing the influence and success of Netscape, now owned by AOL).

In any event, the Internet's development far outstrips the pace at which patents or academic literature do or could proceed. The Patent Office receives over 400,000 patent applications each year, and on average it takes more than two years for an application to be processed. USPTO, PERFORMANCE AND ACCOUNTABILITY REPORT: FISCAL YEAR 2005, at 18, 22-23. Scholarly publications move at a similar pace. In peer-reviewed journals, it typically takes many

---

Machine, http://www.archive.org/web/web.php (last visited Aug.19, 2006). This archive is called the "Wayback Machine" after a fictional machine that allowed one to travel back in time to witness historical events. *See* Mister Peabody, http://en.wikipedia.org/wiki/Mr._Peabody (last visited Aug. 18, 2006).

[9] Although manufacturers of Internet servers and routers have agreed upon certain protocols or interoperability standards to ensure that their respective machines are compatible, these protocols are too limited and too general to provide evidence of a teaching, suggestion or motivation that could limit obvious extensions of existing technology under the Federal Circuit's approach. These protocols define only threshold functionality, the minimum information and processes that the equipment must be able to recognize in order to communicate with other equipment. Firms implement these standards in different fashions, and they often keep their implementations secret because it might provide competitive advantages such as more efficient processing of information, better power consumption, and more robust operations.

months from the submission of an article until publication. Internet engineers operate on a vastly quicker timetable.

Finally, extensive documentation of Internet innovations can be a market liability. Companies that serve and support the Internet are loath to publish their current software or processes lest they expose their users to spammers or hackers or reveal and devalue their trade secrets. *See* Eisenberg, *supra*, at 897-98 (noting that the written record of prior art is a particularly poor proxy for the skill of the ordinary practitioner in fields with a "prevailing culture of secrecy and few incentives to publish").

For all these reasons, Internet technology lacks documentation of the "state of the art" that might be considered evidence of teachings, suggestions or motivations under the Federal Circuit's rigid test. The state of Internet art, however, is known to engineers in the field at any given time and can be implied from current products. It is this more practical state of knowledge that should be evaluated in properly flexible obviousness analysis.

Software. Computer software is another fast-developing area that is ill-suited to the Federal Circuit's rigid test for proving obviousness. Like the Internet, software-based inventions are a new development with a relatively limited documentary history. Widely distributed computer software for consumer use did not appear until the introduction of the personal computer in the late 1970s. *See* PAUL E. CERUZZI, A HISTORY OF MODERN COMPUTING 263-266 (2d ed. 2003).

Furthermore, the patentability of software was at best spotty in the United States until the late 1990s. *See, e.g., AT&T Corp. v. Excel Communications, Inc.*, 172 F.3d 1352, 1355-61 (Fed. Cir. 1999); *State Street Bank & Trust Co. v. Signature Fin. Group*, 149 F.3d 1368, 1373 (Fed. Cir. 1998). *See generally* Julie E. Cohen & Mark A. Lemley, *Patent Scope and Innovation in the Software Industry*, 89 CAL. L.

REV. 1, 8-11 (2001). The available set of patents in the software field is therefore relatively recent and underdeveloped, providing little history of issued, published patents from which to draw evidence of teachings, motivations or suggestions.

In any event, software evolves rapidly. *See, e.g.*, Cohen & Lemley, *supra*, at 6 (noting the "short effective life of software innovations"). Microsoft introduced its first disk operating system (MS-DOS) only in 1980. *See* CERUZZI, *supra*, at 270. Windows, the graphical interface that operates on top of DOS, was introduced in 1983, and since then it has gone through four major transformations as well as numerous minor revisions. *See, e.g.*, Windows History, http://www.microsoft.com/ windows/ WinHistory ProGraphic.mspx (last visited Aug. 19, 2006). The evolution of the Linux operating system is even more rapid because it is "open source" code that is constantly modified by its users, who share their innovations under a general public license. *See, e.g.*, GLYN MOODY, REBEL CODE: LINUX AND THE OPEN SOURCE REVOLUTION 60, 170 (2001). Here again, the technology moves too quickly for published references to keep up.

Finally, software innovations are typically not well documented. The software industry does not rely upon systems of formal documentation used in other technical fields. Like their colleagues in the Internet field, software engineers have little incentive or ability to publish their knowledge in scholarly journals.[10] What does get published tends to be theoretical rather than practical. Moreover, good computer programmers minimize comments elaborating on the

---

[10] *See* Cohen & Lemley, *supra*, at 6; Julie E. Cohen, *Reverse Engineering and the Rise of Electronic Vigilantism: Intellectual Property Implications of "Lock-Out" Programs*, 68 S. CAL. L. REV. 1091, 1178 (1995) ("Many new developments in computer programming are not documented in scholarly publications at all. Some are simply incorporated into products and placed on the market.")

innovations in their programs.[11] In fact, they believe that it is counterproductive to explain trivial or obvious improvements in their software.[12] And software is ephemeral: Although older iterations of software may be tracked down through the judicial discovery process, evidence can be lost forever when systems are upgraded. This is especially burdensome when software that drives a particular process is disseminated over networks in many locations in servers manufactured and maintained by numerous different companies.

While software innovation, unlike improvements in masonry blocks, railroad cars and medical devices, thus often does not leave much of a paper trail, a software engineer of ordinary skill will still be able to identify what is obvious in the field from knowledge of the custom and practice of the industry. Such practical wisdom should be relevant and probative evidence of obviousness even if the Federal Circuit's rigid evidentiary test is impossible to satisfy in many instances.

Other new technologies. The same features of rapid, market-driven development across decentralized markets characterize other high technology areas, and the problems of evidentiary documentation described above for software and the Internet are similar.

---

[11] *See, e.g.*, BRIAN W. KERNIGHAN & P.J. PLAUGER, THE ELEMENTS OF PROGRAMMING STYLE 151 (2d. ed. 1978) ("Don't over-comment."); Free Software Foundation, Inc., *GNU Pascal Coding Standards* ("You should avoid comments by writing clear code."), *available at* http://www.gnu-pascal.de/h-gpcs-en.html#index-trivial-comments-34 (last visited Aug. 19, 2006).

[12] *See, e.g.*, BRIAN W. KERNIGAN & ROB PIKE, THE PRACTICE OF PROGRAMMING 23 (1999) ("Don't belabor the obvious."); Free Software Foundation, Inc., *GNU Pascal Coding Standards* ("Do not write 'trivial' comments."), *available at* http://www.gnu-pascal.de/h-gpcs-en.html #index-trivial-comments-34 (last visited Aug. 19, 2006).

For example, high-speed data networks are expanding at an exponentially rapid pace. One of *amicus* Time Warner's subsidiaries offers video, Internet and Digital Phone services to consumers, and its Digital Phone Service signed up 1.1 million customers in 2005, five times the total at the end of 2004. Rapid change and short product cycles similarly characterize the semiconductor industry. *See* Bronwyn H. Hall & Rosemarie Ham Ziedonis, *The Patent Paradox Revisited: An Empirical Study of Patenting in the U.S. Semiconductor Industry, 1979-1995*, 32 RAND J. ECON. 101, 102 (2001).

Thus, there are many areas of high technology in which there is no basis for the assumption that obvious combinations of elements in the prior art will be documented in prior patents, scholarly journals, or any other reliably obtainable documentation. Where traditional documentary practices are absent, the Federal Circuit's rigid evidentiary requirement will systematically overprotect obvious inventions.

II. THE FEDERAL CIRCUIT'S INFLEXIBLE TEST FOR EVIDENCE OF OBVIOUSNESS UNDERMINES THE PATENT SYSTEM

Ensuring that patents "promote the Progress of Science and useful Arts," U.S. CONST. art. I, § 8, cl. 8., requires a "careful balance" between rewarding the fruits of successful past research and protecting future innovation. "From their inception, the federal patent laws have embodied a careful balance between the need to promote innovation and the recognition that imitation and refinement through imitation are both necessary to invention itself and the very lifeblood of a competitive economy." *Bonito Boats, Inc. v. Thunder Craft Boats, Inc.*, 489 U.S. 141, 146 (1989). Thus, "concepts within the public grasp, or those so obvious that they readily could be, are the tools of creation available to all." *Id.* at 156. Only when an inventor comes up with a genuine innovation

that "add[s] to the sum of useful knowledge" does patent law grant the inventor the exclusive right to his invention for a limited period of time. *Graham*, 383 U.S. at 6.

This careful balance is upset if too many dubious patents clog the market in a field. While new technologies have created hugely valuable innovation in recent decades, "it is [also] an undeniable fact that . . . worthless patents abound." Clarissa Long, *Patent Signals*, 69 U. CHI. L. REV. 625, 626 (2002); *see* Kimberly A. Moore, *Worthless Patents*, 20 BERKELEY TECH. L. J. 1521, 1524 (2005). The proliferation of questionable patents, accompanied by the rise of professional patent litigants, *see, e.g.*, Jeremiah Chan & Matthew Fawcett, *Footsteps of the Patent Troll*, 10 INTELL. PROP. L. BULL. 1 (2005), raises serious concerns. The balance of the patent system depends upon practical mechanisms for distinguishing valuable innovation from dubious exploitation. Without a flexible way to prove obviousness, it is unnecessarily hard for the system—the Patent Office, litigants and courts—to separate the wheat from the chaff.

The Federal Circuit's rigid evidentiary test contributes to these problems, helping to distort innovation and to burden courts and litigants with unduly expensive patent litigation. Returning to the more flexible approach to obviousness mandated by the plain language of the Patent Act and the decisions of this Court would restore the balance between innovation and competition while allowing district courts to use the ample tools at their disposal to ensure that application of the obviousness requirement does not become distorted by inappropriate hindsight.

A. A Flexible Approach To Obviousness Is An Important Check On Over-Reaching Patents

The requirement of nonobviousness plays a crucial role in the practical operation of the patent system. Under the Patent Act, a patented invention must also be "useful" and "new." 35

U.S.C. §§ 101, 102. But these two hurdles are in practice easy to clear. The bar for usefulness is low—almost any claimed invention has a useful purpose. And creative patent attorneys, operating *ex parte* before the Patent Office, can readily circumvent the novelty requirement. Because the claims of a patent define the invention, each "patent" actually contains many inventions of varying scope. Patent attorneys can freely choose how to claim the invention for which they seek patent protection. By adding small limitations to the claims, any competent patent attorney can ensure that at least some claims are novel when strictly compared to the prior art.

Nonobviousness, therefore, is often the only requirement that stands between issuing a dubious patent and appropriately granting valuable exclusive rights. In the Patent Office, obviousness should be "the most frequently dispositive patentability issue, since most inventions can meet the liberal requirements of utility and novelty." Robert W. Harris, *Prospects for Supreme Court Review of the Federal Circuit Standards for Obviousness of Inventions Combining Old Elements*, 68 J. PAT. & TRADEMARK OFF. SOC'Y 66, 66 (1986). "With the statutory subject matter, novelty, and utility requirements presenting quite lenient patentability standards, nonobviousness remains the patent law's most robust guardian of the public domain." John R. Thomas, *Formalism at the Federal Circuit*, 52 AM. U. L. REV. 771, 801 (2003).

B. An Inflexible Approach To Obviousness Distorts Innovation

The Federal Circuit's rigid test for proof of obviousness makes dubious patents in emerging technologies easier to obtain and harder to invalidate. In so doing, it undermines both the legitimacy of all patents and the patent system's overall goal of stimulating genuine innovation.

To begin with, by making obviousness too difficult to show, especially in high technology industries where docu-

mented teachings, suggestions and motivations are scarce, the Federal Circuit's rigid test devalues genuine inventions. The problem of incremental, non-inventive follow-on developments illustrates this point: After investing considerable time and money in research, an inventor might make genuine innovation in an emerging technology, patent that innovation, and start marketing that innovation under the patent. If others are able to obtain patents for mundane or trivial improvements to this innovation that would be obvious under a flexible test, however, the inventor will not be able to fully realize the value of an invention. The follow-on patents will block the inventor from making workmanlike improvements to the invention. And the inventor will be unable to realize the patent's full value because licenses for the follow-on patents must be obtained in order to practice the original invention fully.

The Federal Circuit's test, moreover, encourages innovators to take wasteful steps to avoid these problems, further undermining innovation. To protect their inventions where it is too difficult to show that follow-on inventions are obvious (and the Patent Office therefore cannot be trusted to reject patents for trivial improvements adjacent to true innovations), inventors have an incentive to seek patents on any incremental improvements that they desire to make and to ensure that every obvious improvement (whether of commercial interest or not) is published. Thus, prudent inventors are forced to divert time and resources away from productive activities into duplicative patent applications or wasteful submissions to the *Journal of Obvious Suggestions* in their area. Patent law should not encourage such deadweight loss, but instead should free inventors to discover new inventions by protecting them against attempts to patent obvious extensions of their inventions.

The Federal Circuit's rigid evidentiary test also undermines the ultimate goal of the patent system, which is to stimulate

innovation. *See, e.g., Aronson v. Quick Point Pencil Co.*, 440 U.S. 257, 262 (1979) (noting that patent law "seeks to foster and reward invention [and] to stimulate further innovation"); *see also Mazer v. Stein*, 347 U.S. 201, 219 (1954). By permitting patents on obvious innovations that are unworthy of protection, the rule blocks the path to new inventions without adding to the sum of useful knowledge.

Indeed, to limit their exposure to suits over obvious inventions, innovative companies actually providing products and services are forced to patent those inventions themselves and attempt to assemble patent portfolios that will either deter suits or permit cross-licenses to avoid suit. *See, e.g.*, Carl Shapiro, *Navigating the Patent Thicket: Cross Licenses, Patent Pools, and Standard-Setting, in* 1 INNOVATION POLICY AND THE ECONOMY 119, 127-128 (Adam Jaffe *et al.*, eds., 2000). Thus, the Federal Circuit's test not only deprives would-be future inventors of free access to ideas and technologies; it also diverts funds that might otherwise be used for such innovation to defend against potential claims based upon unjustly issued patents.

C. An Inflexible Approach To Obviousness Distorts Patent Litigation

In addition to undermining both the legitimacy and the goals of the patent system, the Federal Circuit's rigid obviousness test also increases the burden of patent litigation on courts and litigants. Because obviousness is a question of law, it should be susceptible to resolution on summary judgment in appropriate cases. An obviousness test that is properly tailored to the Patent Act's technology-specific language could decide much litigation at the threshold, avoiding lengthy and expensive trials.[13]

---

[13] Patent trials are expensive. The "industry rule of thumb" is that "any patent infringement lawsuit will easily cost $1.5 million in legal fees

The Federal Circuit's inflexible test, however, makes it nearly impossible for an obviousness defense to prevail at the summary judgment stage.[14] Because of the Federal Circuit's

---

alone to defend." WENDY H. SCHACHT & JOHN R. THOMAS, CONGRESSIONAL RESEARCH REPORT: PATENT REFORM: INNOVATION ISSUES 7 (2005). Moreover, high stakes litigation is even more costly. In patent suits with damage claims of more than $25 million, direct expenses can increase to $4 million per side. *Id.*; *see also* ADAM B. JAFFE & JOSH LERNER, INNOVATION AND ITS DISCONTENTS 14 (2004).

[14] For example, in *McGinley v. Franklin Sports, Inc.*, 75 F. Supp. 2d 1218 (D. Kan. 1999), the plaintiff's patent claimed an "invention" in finger markings on a baseball to teach various pitches. The defendant, who sold baseballs with finger markings, sought summary judgment that the patent was invalid as obvious. Lacking any body of peer-reviewed journals in the baseball pitching field, the defendant offered evidence of obviousness including deposition testimony that a witness's son had "decided to sketch designs on his baseball to show a neighborhood boy where to place his fingers in order to throw certain pitches," *id.* at 1226, and evidence of a prior patent on marked baseballs of less than regulation size, *id.* at 1228. After denying summary judgment based on inability to satisfy the Federal Circuit's rigid obviousness test, the district court submitted the case to the jury, which found the patent valid and infringed. The district court granted judgment as a matter of law that the patent was obvious. 92 F. Supp. 2d 1216 (2000). But the plaintiff appealed, and the Federal Circuit reversed, reinstating the jury's verdict. 262 F.3d 1339 (2001).

For similar examples, see *Neato, LLC v. Rocky Mountain Traders*, 138 F. Supp. 2d 245, 251-56 (D. Conn. 2001) (denying summary judgment of obviousness where the asserted patent claimed an automatic device for applying labels onto compact disks and the prior references included a patent for an automatic device for applying labels onto audiotapes and a patent for a manual device for applying labels onto compact disks); *Remington Arms Co., Inc. v. Modern Muzzleloading, Inc.*, No. 2:97CV00660, 1999 WL 281341, at *8-*10 (M.D.N.C. Feb. 9, 1999) (denying summary judgment on the obviousness of a patent on a firing mechanism for front loading a firearm where prior art existed on rear loading firearms); *Simmons, Inc. v. Bombardier Inc.*, 328 F. Supp. 2d 1188, 1204-06 (D. Utah 2004) (denying summary judgment on obviousness where the patent claimed a snowmobile ski with guide rods and a concave bottom for moving over snow, and prior skis contained all the elements of the

rigid approach requiring evidence of an explicit publication of the suggestion or motivation even when the elements of a patent are admittedly old, their combination does not require any unusual skill, and it achieves no new results, district court judges understandably struggle to apply the obviousness test to weed out even the most dubious patents.[15]

The wasteful consequences to the patent system are twofold. First, litigants do not defend obviousness cases as obviousness cases any more. To defend against a claim of infringement of a classically obvious patent, they are required to shift into far more time-consuming and fact-intensive defenses such as noninfringement or more subjective defenses such as inequitable conduct or best mode.[16] Indeed, it is well understood by in-house patent counsel and patent litigators that obviousness alone is too slender a reed on which to rely in defending their clients against patent assertions.

Second, defendants unwilling or unable to endure expensive trials often capitulate to settlements that would not succeed were the obviousness inquiry not so insurmountable at the summary judgment stage. Unwarranted settlements

---

claimed ski, but there was no evidence of a specific suggestion to combine the elements).

[15] *See, e.g., Aventis Pharma Deutschland GMBH v. Lupin Ltd.*, No. 2:05CV421, 2006 WL 2008962 (E.D.Va. July 17, 2006) (upholding against obviousness challenge one of a series of pharmaceutical patents plaintiff had obtained through what the district court called "clever maneuverings or fortuitous happenstance before the [PTO] or FDA," *id.* at *1, because the court could not identify a clear, published motivation in the references under the Federal Circuit's test, *id.* at *43).

[16] While important under current practice, such defenses have been criticized as inefficient. *See* COMMITTEE ON INTELLECTUAL PROPERTY RIGHTS IN THE KNOWLEDGE-BASED ECONOMY, NATIONAL RESEARCH COUNCIL, A PATENT SYSTEM FOR THE 21ST CENTURY 120-23 (Stephen Merrill *et al.* eds, 2004).

upset the balance of the patent system by providing excessive returns to unjustified monopolies. *See eBay v. MercExchange*, 126 S. Ct. 1837, 1842 (2006) (Kennedy, J., concurring).

These concerns are by no means hypothetical. Consider, for example, the nearly ten years of patent litigation between Gemstar and its subsidiary Starsight and the digital TV equipment industry. Gemstar asserted infringement claims relating to electronic program guides, grids of show selections arranged by channel and time much as newspapers provided for decades. Although this might have been thought an obvious innovation, in over a decade of litigation over multiple patents in multiple forums, no determination on obviousness was ever made, and the case was instead contested on grounds of noninfringement, inequitable conduct, and anticipation, which were ultimately successful. *See, e.g., Gemstar-TV Guide Int'l, Inc. v. Int'l Trade Comm.*, 383 F.3d 1352, 1363 (Fed. Cir. 2004). But several parties paid enormous sums along the way to avoid uncertainty. *See Corporate Brief*, NAT'L L.J., NOV. 13, 2000, at B8 (noting $200 million settlement with Motorola); Jonathan Fahey, *Screen Grab*, FORBES, Mar. 5, 2001, at 52 (noting additional settlements with Microsoft and AOL).

D. A Flexible Approach To Obviousness Will Not Subject Patentees To Improper Hindsight Bias

The Federal Circuit suggests that its rigid evidentiary test for obviousness will "guard[] against entry into the tempting but forbidden zone of hindsight." *In re Dembiczak*, 175 F.3d 994, 998 (Fed.Cir.1999). *Amici* recognize the danger that, many years after an invention has become widely used, its innovation might seem mundane in retrospect—an inevitable progression of the art. *See White v. Samsung Elecs. Am. Inc.*, 989 F.2d 1512, 1513 (9th Cir. 1993) (Kozinski, J., dissenting from denial of rehearing en banc) ("Nothing today . . . is

genuinely new: Culture, like science and technology, grows by accretion, each new creator building on the works of those who came before.").

But reasoned retrospective analysis is not the same as abusive hindsight. Any improper *ex post* reasoning can be avoided so long as one steps back in time into the inventor's shoes at the time of the invention, and considers the evidence available in the technology at that time to a person having ordinary skill in the art, as the Patent Act and this Court's precedents instruct. The requirement of stepping back in time to stand in the shoes of a PHOSITA actually *protects* patents by avoiding analysis of the invention from an unduly contemporary perspective. By requiring that a decision maker step into the shoes of a person of ordinary skill at the time of the invention, the test protects against invalidating worthy patents that were innovative at the time they were made. Thus, the Federal Circuit's rigid test is wholly unnecessary to protect against any improper hindsight bias.

Accordingly, this Court should reject the Federal Circuit's rigid evidentiary test in favor of a return to the more flexible approach reflected in the Patent Act and the Court's own longstanding precedents. This approach need not preclude summary judgment in appropriate cases. Trial courts apply retrospective, fact-specific requirements in many areas, including distinctiveness in trademark law, market power in antitrust law, and negligence in tort law. In these areas, trial courts use summary judgment to weed out insubstantial claims. There is no reason they should not be able to do the same in the patent context. A rigid rule that robs district courts of this ordinary and expected power lacks grounding in law or policy.

Under a flexible, technology-specific approach, prior published teaching, motivation or suggestion of a combination of existing art will still be relevant to and sometimes dispositive of obviousness. But district courts are fully capable of

distinguishing innovative combinations from rote applications of what was already known and expected even if not confined to evidence of prior published suggestions. They may look, for example, to evidence of the nature of the elements being combined, the predictability of the result of the combination, the maturity of the industry, and the speed of innovation in that particular industry.

In some instances, such evidence will be dispositive. For example, where known elements are combined to create an unexpected synergy, the nonobviousness of an invention might be indisputable and summary judgment warranted for the plaintiff. *Cf. United States v. Adams*, 383 U.S. 39, 51-52 (1966) (finding water battery nonobvious in light of its unexpected operating capabilities). In determining whether there is any genuine issue concerning obviousness, the lower courts can develop guideposts for such categories of cases over time. Meanwhile, courts can guard against the submission of unfounded or conclusory evidence about what was obvious at the time of invention. *See* FED. R. EVID. 702; *see also Mid-State Fertilizer v. Exchange Nat'l Bank*, 877 F.2d 1333, 1339 (7th Cir. 1989) ("An expert who supplies nothing but a bottom line supplied nothing of value to the judicial process.").

Thus, the flexible standard mandated by this Court and by the Patent Act provides a practical and useful means of resolving obviousness, and need not prevent the entry of summary judgment in appropriate cases. Such a flexible test served the system well for the century between *Hotchkiss* and the Patent Act, and *amici* respectfully submit that rapid changes in many high technology industries only emphasize how vital such a flexible approach remains today.

CONCLUSION

For the reasons stated above, the decision below should be vacated.

Respectfully submitted,

KATHLEEN M. SULLIVAN
Counsel of Record
DANIEL H. BROMBERG
BRIAN C. CANNON
QUINN EMANUEL URQUHART
OLIVER & HEDGES, LLP
555 Twin Dolphin Drive,
Suite 560
Redwood Shores, CA 94065
(650) 801-5000

Counsel for Amici Curiae

August 22, 2006

140F(43)

No. 04-1350

FILED
OCT 16 2006
OFFICE OF THE CLERK
SUPREME COURT, U.S.

IN THE

Supreme Court of the United States

KSR INTERNATIONAL CO.,

Petitioner,

v.

TELEFLEX INC. and
TECHNOLOGY HOLDING CO.,

Respondents.

ON WRIT OF CERTIORARI TO THE
UNITED STATES COURT OF APPEALS
FOR THE FEDERAL CIRCUIT

BRIEF FOR TECHNOLOGY PROPERTIES LIMITED AS *AMICUS CURIAE* SUPPORTING RESPONDENTS

ROGER L. COOK
KEVIN L. BASTIAN
NANCY L. TOMPKINS
TOWNSEND AND TOWNSEND
AND CREW LLP
Two Embarcadero Center
Eighth Floor
San Francisco, CA 94111
(415) 576-0200

Attorneys for Amicus Curiae

204110

COUNSEL PRESS
(800) 274-3321 • (800) 359-6859

TABLE OF CONTENTS

Page

TABLE OF CITED AUTHORITIES iv

I. STATEMENT OF INTEREST OF *AMICUS CURIAE* 1

II. SUMMARY OF ARGUMENT 2

III. ARGUMENT 4

A. The Decision Requested By Petitioner And Some *Amici* Would Destroy The Presumption Of Validity As To Most If Not All Issued Patents. 4

B. The Decision Requested by Petitioner and Some *Amici* Would Disadvantage Small Entrepreneurial Companies like TPL *Vis-À-Vis* Large, Well-Established Companies That Dominate their Industries. 5

C. The Notion That Patent Protection Should Be Weakened In Aid of Competition Is False. ... 10

D. The Sky Is Not Falling. 13

1. There Is No Evidence Of An Inundation Of Trivial Patents 13

2. There Is No Evidence Of An Explosion Of Unnecessary Litigation 14

Contents

Page

3. The Motivation-To-Combine Test Has Not Foreclosed Summary Judicial Determinations of Obviousness 15

a) The Federal Circuit *Should* Issue Fewer Summary Determinations Than The Regional Courts Of Appeals 15

b) When Judicial Determination Is Appropriate, The Federal Circuit Has Not Hesitated To Issue Or Affirm Such A Determination 16

4. There Is No Evidence That The Patent System Is Thwarting Invention Or Commerce. To The Contrary, The Health Of Commerce And The Rapid Pace Of Innovation Over The Decades Since The Federal Circuit Was Created Can Fairly Be Attributed To A Patent System That Is, Finally, Working 17

E. The Federal Circuit's Motivation-To-Combine Test Is Of A Piece With This Court's Decisions in *Graham*, *Sakraida*, *Anderson's-Black Rock*, and *United States v. Adams*. 19

1. The Federal Circuit has Implemented the *Graham* Standards and Advanced This Court's Directive To Guard Against Hindsight By Insisting That Determinations of Obviousness Be Supported by Explicit Findings 22

Contents

Page

2. The FTC Report's Discussion of the "Suggestion" Test Addresses a Nonexistent Problem 25

3. The Motivation-To-Combine Test Fairly Requires Concrete Suggestions Beyond Those Actually Needed by a Person with Ordinary Skill in the Art 27

F. This Court Should Not Lightly Jettison The Court of Appeals' Reasoned and Exacting Requirements For Proving Obviousness. ... 28

1. An Uncertain Patent Privilege Is Little Better Than No Patent Privilege at All 28

2. The Motivation-To-Combine Test Lends Structure And Integrity To The Examination Of Patents Both In Prosecution And In Litigation 29

IV. CONCLUSION 30

TABLE OF CITED AUTHORITIES

Page

Cases

Abbott Labs. v. Andrx Pharms., Inc.,
452 F.3d 1331 (Fed. Cir. 2006) 17

Alza Corp. v. Mylan Labs., Inc.,
No. 06-1019, __ F.3d __,
2006 WL 2556356 (Fed. Cir. Sept. 6, 2006) 16

Anderson's-Black Rock, Inc. v. Pavement Salvage Co.,
396 U.S. 57 (1969) 19

Bonito Boats, Inc. v. Thunder Craft Boats, Inc.,
489 U.S. 141 (1989) 10

Compco Corp. v. Day-Brite Lighting, Inc.,
376 U.S. 234, 84 S. Ct. 779,
11 L. Ed. 2d 669 (1964) 11

Dystar Textilfarben GmbH & Co. Deuetschland KG v. C.H. Patrick Co.,
No. 06-1088, — F.3d. —, 2006 WL 2806466
(Fed. Cir. October 3, 2006) 16, 20, 22, 27

eBay v. MercExchange, L.L.C.,
126 S. Ct. 1837 (2006) 2

Environmental Designs, Ltd. v. Union Oil Co.,
713 F.2d 693 (Fed. Cir.1983) 5

Graham v. John Deere Co.,
383 U.S. 1 (1966) ..... *passim*

Cited Authorities

Page

In re Dembiczak,
175 F.3d 994 (Fed. Cir. 1999) 13-14

In re Kahn,
441 F.3d 977 (Fed. Cir. 2006) 17

In re Rouffet,
149 F. 3d 1350 (Fed. Cir. 1998) 24-25

Kewanee Oil Co. v. Bicron Corp.,
416 U.S. 470, 94 S. Ct. 1879,
40 L. Ed. 2d 315 (1974) 11, 12

Lear, Inc. v. Adkins,
395 U.S. 653, 89 S. Ct. 1902,
23 L. Ed. 2d 610 (1969) 11, 12

New York Trust Co. v. Eisner,
256 U.S. 345, 41 S. Ct. 506,
65 L.Ed. 963 (1921) 2

NPF Ltd. v. Smart Parts, Inc.,
No. 05-1273, 2006 WL 1876659
(Fed. Cir. June 27, 2006) (unpub'd) 17

Ormco Corp. v. Align Technology, Inc.,
No. 05-126, __ F.3d __, 2006 WL 2493245
(Fed. Cir. Aug. 3, 2006) 16

Richdel, Inc. v. Sunspool Corp.,
714 F.2d 1573 (Fed. Cir.1983) 5

Cited Authorities

Page

Rogers v. Desa Int'l, Inc.,
No. 02-1247, 2006 WL 1965660
(Fed. Cir. Jul. 13, 2006) (unpub'd) 17

Sakraida v. Ag Pro, Inc.,
425 U.S. 273 (1976) 19

Sears, Roebuck & Co. v. Stiffel Co.,
376 U.S. 225, 84 S. Ct. 784,
11 L. Ed. 2d 661 (1964) 11, 30

United States v. Adams,
383 U.S. 39 (1966) 19

Constitutional Provisions

U.S. Constitution, Article I, § 8, cl. 8 13

Statutes

35 U.S.C. § 282 4

Other Authorities

Judicial Conference, 84 F.R.D. at 474 21

Judicial Conference, *A Talk Show — A Federal Appellate Court With Exclusiv Patent Jurisdiction: An Idea Whose Time Has Come?* 84 F.R.D. 429,
471 (1979) (Statement of B. Robert Benson. 19

I. STATEMENT OF INTEREST OF *AMICUS CURIAE*[1]

Founded in 1989, Technology Properties Limited (TPL) is a small Silicon Valley company that acquires and develops proprietary microprocessor (the "Moore Microprocessor Patents" or "MMP" portfolio) technology. TPL is co-owner of a portfolio of eight patents based upon an original patent application filed in 1989 by Charles Moore and Russell Fish. Although the original inventors were successful in building a working microprocessor, they lacked the funds to commercialize this technology.

TPL assumed exclusive responsibility for licensing and enforcing the MMP portfolio, which was being widely infringed, on behalf of its co-owners. TPL's licensing efforts have been remarkably successful. Some of the world's pre-eminent developers of microprocessors and microprocessor-based products — Intel, Advanced Micro Devices, Hewlett Packard, Fujitsu, Sony, Seiko Epson, Olympus, Casio and Kenwood — have purchased licenses to the MMP portfolio.

TPL is using the proceeds of these licensing efforts to fund resumed development and advancement of Mr. Moore's microprocessor technology and microprocessor-based products utilizing that technology, and to fund further licensing and enforcement of the patent portfolio.

TPL is a small player in an industry dominated by large, well-established companies. As such, TPL depends upon its patent rights, and upon predictable and efficiently-enforceable patent laws, not only to fund its inventive endeavors, but also to protect its new product developments from those who, absent effective protection could, and probably would, copy without

1. Counsel for both parties have consented to the filing of this brief, and their consents have been filed with the Clerk of this Court. No counsel for either party had any role in authoring this brief, and no person other than the named *Amicus* and its counsel has made any monetary contribution to the preparation and submission of this brief. *See* Supreme Court Rules 37 and 37.6.

compensating TPL. In the absence of dependable patent rights and patent laws, TPL would not have the incentive to risk investing in further product development, or in further efforts to license and enforce its patents.

II. SUMMARY OF ARGUMENT

> When it comes to discerning and applying [legal and equitable] standards, . . . "a page of history is worth a volume of logic." *New York Trust Co. v. Eisner*, 256 U.S. 345, 349, 41 S. Ct. 506, 65 L.Ed. 963 (1921) (opinion for the Court by Holmes, J.).

eBay v. MercExchange, L.L.C., 126 S. Ct. 1837, 1842 (2006) (Roberts, C.J., concurring).

This Court should not dismantle the Federal Circuit's standards for patent obviousness absent some evidence that those standards have compromised the patent system, retarded commerce, or thwarted invention. Petitioner and its supporting *amici* have shown nothing of the kind, either statistically or anecdotally.

It is understandable that petitioner and its *amici*, large well-established companies that dominate their industries, should lobby for weaker patent protection. Their success hinges, not on vigorous enforcement of their intellectual-property rights, but on their freedom to use whatever technology they wish, free of restrictions. What they propose would undermine the presumption of validity as to most if not all issued patents. While this would secure the entrenched Goliaths' freedom to operate, it would alter the risk/return calculus upon which many small, innovative Davids, have staked their fortunes.

Petitioner's "evidence" that the "teaching, suggestion, motivation" test (also referred to as the "suggestion" test or the "motivation-to-combine" test) is too exacting, leading to the issuance of trivial patents, boils down to little more than its *ipse dixit* that the patent asserted in this case is *obviously*

obvious. This argument in itself highlights the need for objective standards. (How is a court otherwise to adjudicate this claim?)

Petitioner's further support for an ailing system is that the obviousness test precludes the judicial determination that a patent is obvious as a matter of law. But the Federal Circuit has upheld (or reversed for entry of) some half-dozen judicial determinations of obviousness in the past six months alone. In sum, by petitioner's standards, the patent system is functioning very well.

Neither is there anything to suggest that the obviousness test is either retarding commerce or thwarting invention. Indeed, petitioner and its *amici* who radically advocate destruction of the motivation-to-combine test in an attempt to weaken the patent system in the name of competition have either short memories or ulterior motives. Congress created the Federal Circuit specifically to treat the depressed climate for innovation pervading the late 1970's, when the patent system had become ineffective, and the subjective ease with which a patent could be invalidated strongly favored companies that copied over those willing to invest the time, talent, energy and money to innovate. American companies that had innovated had fallen prey to lower-priced foreign competition, and were faced with the prospect of going out of business.[2]

The Federal Circuit's strengthening the patent system "added the fuel of interest to the fire of genius," inspiring companies such as Texas Instruments in the 1980's for the first time to unleash the offensive potential of their patent portfolios against their foreign competitors. *Id.* Others followed suit. *Id.* The result has been an unprecedented two decades of prosperity marked by dramatic increases in productivity, with companies such as TPL conceived around the expectation of patent protection. Petitioner's conclusion that progress will advance

---

2. Shell, G. Richard, *Make The Rules Or Your Rivals Will*, Crown Business, 2004, pp. 119-124.

unabated only if this Court intercedes to alter settled patent law is both far-fetched and self-serving. In fact, the health of commerce and the rapid pace of innovation over the decades since the Federal Circuit was created can fairly be attributed to a patent system that is, finally, working.

Far from running amok as petitioner and its *amici* claim, the Federal Circuit is doing exactly what it was created to do. Applying this Court's broad directives in *Graham v. John Deere Co.*, 383 U.S. 1 (1966) and other cases, it has articulated a unified and comprehensible body of patent law that provides specific guidance to the district courts and fairness to litigants, while yielding a record that enables appellate review. The Court of Appeals' reasoned and exacting requirements for proving obviousness lend structure and integrity to the examination of patents both in prosecution and in litigation, holding examiners and judges to objective and articulable standards in making what could otherwise be highly subjective judgments. As history has shown, these standards bring to patent law the predictability that fuels the engines of commerce and invention. The Court of Appeals' judgment should be upheld.

III. ARGUMENT

A. The Decision Requested By Petitioner And Some *Amici* Would Destroy The Presumption Of Validity As To Most If Not All Issued Patents.

In backing various inventive activity, TPL's basic assumption is that once patents have been issued by the PTO — as have the MMP portfolio patents — they will be given deference appropriate to the statutory provisions of 35 U.S.C. § 282, which provides:

> A patent shall be presumed valid. . . . The burden of establishing invalidity of a patent or any claim thereof shall rest on the party asserting such invalidity.

The presumption of patent validity is based upon the assumption of administrative correctness, *i.e.*, that once a patent has been examined by the PTO, which has appropriate expertise in the patent law and relevant technology, it should not be casually overturned.

Petitioner and some of its *amici*, however, are seeking a judicial determination that would say, in effect, that the patentability standard that has been used to issue, and to review the issuance of, more than two decades of patents is wrong. Such a determination would be tantamount to a proclamation of administrative ***incorrectness***.

That such a determination would apply "only" to so-called "combination patents" is cold comfort in view of longstanding Federal Circuit law to the effect that "virtually all [inventions] are combinations of old elements." *Environmental Designs, Ltd. v. Union Oil Co.*, 713 F.2d 693, 698 (Fed. Cir.1983); *see also Richdel, Inc. v. Sunspool Corp.*, 714 F.2d 1573, 1579-80 (Fed. Cir.1983) ("Most, if not all, inventions are combinations and mostly of old elements.").

If a so-sweeping change in decades-old law of patentability is necessary, it should be the province of Congress to create an appropriate statute, setting an effective date, and applying that statute only to patent applications filed after the effective date, and patents issuing from those applications. This approach would preserve the presumption of validity as to issued patents.

B. The Decision Requested by Petitioner and Some *Amici* Would Disadvantage Small Entrepreneurial Companies like TPL *Vis-À-Vis* Large, Well-Established Companies That Dominate their Industries.

The decision requested by petitioner and some *amici* would disadvantage small entrepreneurial companies like TPL *vis-à-vis* large, well-established companies that dominate their

industries. Companies such as TPL depend heavily upon patents for their survival.

Over the past few years, a national debate has emerged with regard to the patent system. On one side of this debate are entities, primarily the largest, most established companies in their respective industries, and those whose interests are aligned with them, who argue that there are too many patents (*e.g.*, that the PTO issues patents that, under the current standard of patentability, should never issue or that the current standard of patentability is too low) or that patents are too easily enforced (*e.g.*, that injunctions against patent infringement should not routinely issue).

The 2003 Federal Trade Commission Report[3] has provided fodder for this debate, offering criticism of the PTO and Federal Circuit. And more recent high-profile patent infringement cases like the "Blackberry" and eBay cases have brought some of these issues to the attention of a relatively wide audience.

However, the FTC Report gives short shrift to the views of companies such as TPL.

What permeates the report, and what TPL believes has unduly influenced the national debate, is a bias in favor of the large, well-established companies that occupy relatively dominant positions in their industries. This is only natural, since those companies are easy to identify and their advocates are eager to participate in proceedings such as those that led to

---

3. FTC, *To Promote Innovation: The Proper Balance of Competition and Patent Law and Policy* (2003) *www.ftc.gov/os/2003/10/innovationrpt.pdf*, ("FTC Report").

the FTC Report. Not so easy to find, or — because they are often counting pennies and/or operating with few employees under excruciating time deadlines — eager to participate, are the TPL's of the world.

Consider for example the FTC statement of Cisco Systems (by Robert Barr, World Patent Counsel and Vice President of Cisco Systems) [2/28 02, at http://www.ftc.gov/opp/intellect/barrobert.doc ("Cisco Stmt.")]. At the time the FTC Report was in preparation, Cisco Systems was the crown prince of high-tech companies in the United States. As a result, as might be expected, the Cisco statement was given considerable credibility, and was cited 54 times in the Report.

Cisco's statement played down the importance of patents in Cisco's success, and played up the importance of "competition" and "open non-proprietary interfaces," and stated that the company had been accumulating patents, not to protect innovation, but to use as defensive trading chips.[4] This statement,

---

4. "Cisco Systems designs and sells network equipment. Cisco was founded in 1984 and went public in 1989. Between 1984 and 1993, the first ten years, the company filed only one patent. *In 1994 the company had grown to over $1B in annual revenue. This growth was obviously not fueled by patents, it was fueled by competition and by open non-proprietary interfaces.* But in 1994, the company started a program to obtain more patents. We did this for defensive purposes, to have something to offer in cross-licenses with older companies who had large patent portfolios and used them to obtain revenue and design freedom through licensing. We filed 6 patents in 1994, and increased that each year; we are now filing over 700 patents/year. We have entered into several cross-licenses and we have been involved in several costly patent lawsuits. I would like to discuss the relationship between patents and innovation at Cisco.

   Cisco is an innovative company. Our Chief Development Officer, Mario Mazzola, defines

(Cont'd)

however, exemplifies an important, and highly relevant, blind spot of the FTC Report.

Cisco Systems is a large, well-established company, which dominates its industry.[5] As a result, it is fair to assume that it has important marketplace advantages that smaller companies do not, *e.g.*, market power, economies of scale, customer contacts, reputation, *etc.* Accordingly, it can utilize these marketplace advantages to easily win sales from smaller competitors — *so long as it has the freedom to utilize whatever technology it wishes*. For this reason, *freedom to operate* tends

(Cont'd)

> innovation as "a more efficient and creative way of providing customers with products and technology that deliver new levels of functionality and services that were previously unattainable. Innovation is more than just a new idea — it is about taking a new idea and developing it into customer value and positive business impact". We have done this, we have brought products to market that have helped create the Internet as it exists today and that have helped change the way people communicate.
>
> *My observation is that patents have not been a positive force in stimulating innovation at Cisco. Competition has been the motivator; bringing new products to market in a timely manner is critical. Everything we have done to create new products would have been done even if we could not obtain patents on the innovations and inventions contained in these products. I know this because no one has ever asked me 'can we patent this?' before deciding whether to invest time and resources into product development."*

Id.

5. US News & World Report, *Cisco's Connections*, June 18, 2006, at http://www.usnews.com/usnews/biztech/articles/060626/26best.htm ("The company's routers and switches — the two networking devices that keep the Internet humming by allowing computers to talk to one another — have captured more than 70% of the expanding 23 billion-dollar markets, according to Dell'Oro Group.")

to be the primary concern of companies like Cisco Systems. Conversely, *effective patent protection* is the primary concern of small companies wishing to compete with Cisco Systems. These two objectives are in conflict.

As a result, one might expect Cisco Systems to downplay the importance that patent protection played during the time that it was growing to become dominant in its industry. Sure enough, the Cisco statement omits a highly relevant fact — which is that Cisco's greatest growth was built not upon its own innovation, but upon *acquisition of numerous small innovative companies*.[6] It is inconceivable that Cisco would have acquired these companies if it could have merely copied their products. In other words, presumably, these small companies had intellectual property protection for their technology. In fact, a study of public records conducted by the undersigned shows that, at the time of their acquisition, these 110 companies owned 88 patents or pending patent applications which eventually issued as patents. Moreover, many of the products acquired were almost certainly software-based, protectable by copyright and not necessarily by patents. Further, many of the acquired companies were acquired within about one year after they were founded — not necessarily the time within which they would have filed patent applications.

The difference in patent-perspective, between large, well-established companies dominant in their industry, and their small, innovative (actual/potential) competitors has been documented.[7]

---

6. US News & World Report, *Cisco's Connections*, June 18, 2006, at http://www.usnews.com/usnews/biztech/articles/060626/26best.htm ("Since it made its first acquisition in 1993, [Cisco] has gobbled up *a total of 110 companies* — an average of about one every six weeks for 13 years. . . . Cisco's business, *built largely through acquisition*, is booming.") (Emphasis added).

7. Hall, Branwyn H., *Exploring the Patent Explosion* (July 2004), NBER Working Paper No. W10605, available at SSRN:http://ssrn.com/

(Cont'd)

This Court should not promote "freedom to operate," *i.e.* freedom to copy, at the expense of effective patent protection. Because it is always cheaper to copy a product once it is developed than to develop that product in the first place, if copying is allowed, it inevitably drives out innovation.

C. The Notion That Patent Protection Should Be Weakened In Aid of Competition Is False.

Petitioner and some of its *amici* argue that the patent system over-protects, and ask this Court to raise the bar of patentability so as to make it harder to obtain patents and easier to invalidate them. According to these entities, the Federal Circuit's allegedly-low standard for patentability and tough standard for patent invalidation is imposing a burden on commerce and hindering competition.

Petitioner and its *amici* support this argument by asserting that the patent system "represents a carefully crafted bargain that encourages both the creation and public disclosure of new and useful advances in technology, in return for an exclusive monopoly for a limited period of time.[8] According to these advocates, "that bargain's effectiveness in inducing creative effort and disclosure depends on 'a backdrop of free competition in the exploitation of unpatented designs and innovations.'" *Bonito Boats, Inc. v. Thunder Craft Boats, Inc.*, 489 U.S. 141, 151 (1989).[9]

Yet, the quote taken from *Bonito Boats* is not only *dictum*, it has nothing to do with standards for patentability, and reprises

---

(Cont'd)

abstract=563049 ("Their evidence agrees with the Zeidonis and Hall finding that patents are now primarily used for defensive purposes in semiconductors, to protect against litigation and for crosslicensing. *But we also found that patents were considered important for securing financing for startups in this industry.*") (Emphasis added.)

8. Brief for the United States As Amicus Curiae Supporting Petitioner, p. 11.

9. *Id.*

a philosophy that this Court rejected more than 30 years ago in *Kewanee Oil Co. v. Bicron Corp.*, 416 U.S. 470, 94 S. Ct. 1879, 40 L. Ed. 2d 315 (1974). In *Kewanee*, the Sixth Circuit Court of Appeals had decided that the Ohio trade secret law was preempted by the federal patent laws. The Sixth Circuit's decision was based upon the notion that, by offering patent-like protection for both patentable and unpatentable ideas under the Ohio trade secret law, the state law was in conflict with the "strong federal policy favoring free competition in ideas which do not merit patent protection," expressed in *Lear, Inc. v. Adkins*, 395 U.S. 653, 656, 89 S. Ct. 1902, 1903, 23 L. Ed. 2d 610 (1969) (referring to "recent decisions emphasizing the strong federal policy favoring free competition in ideas which do not merit patent protection. *Sears, Roebuck & Co. v. Stiffel Co.*, 376 U.S. 225, 84 S. Ct. 784, 11 L. Ed. 2d 661 (1964); *Compco Corp. v. Day-Brite Lighting, Inc.*, 376 U.S. 234, 84 S. Ct. 779, 11 L. Ed. 2d 669 (1964).") In *Kewanee*, this Court reversed the Sixth Circuit, emphasizing that the paramount policy was the Constitutional policy underlying the *patent laws*, which were to "promote the progress of science and useful arts," giving priority to that policy over the allegedly corollary policy favoring free competition in ideas which do not merit patent protection. In a strongly worded dissent,[10] recognizing that the majority had elevated the Constitutional policy underguiding the patent laws over the policy favoring free competition in unpatented products, Mr. Justice Douglas, joined by Mr. Justice Brennan, acknowledged that the decision in *Kewanee* is "at war with the philosophy [free competition in unpatented products] of *Sears*":

> Today's decision is at war with the philosophy of *Sears, Roebuck & Co. v. Stiffel Co.*, 376 U.S. 225, 84 S. Ct. 784, 11 L. Ed. 2d 661 and *Compco Corp. v. Day-Brite Lighting, Inc.*, 376 U.S. 234, 84 S. Ct. 779, 11 L. Ed. 2d 669. Those cases involved patents-one of a pole lamp and one of fluorescent lighting fixtures each of which was declared invalid. The

10. 416 U.S. at 495.

> lower courts held, however, that though the patents were invalid the sale of identical or confusingly similar products to the products of the patentees violated state unfair competition laws. We held that when an article is unprotected by a patent, state law may not forbid others to copy it, because every article not covered by a valid patent is in the public domain. Congress in the patent laws decided that where no patent existed, free competition should prevail; that where a patent is rightfully issued, the right to exclude others should obtain for no longer than 17 years, and that the States may not 'under some other law, such as that forbidding unfair competition, give protection of a kind that clashes with the objectives of the federal patent laws,'[FN1] 376 U.S., at 231, 84 S.Ct. at 789.
>
> FN1. Here as in *Lear, Inc. v. Adkins*, 395 U.S. 653, 674, 89 S.Ct. 1902, 1913, 23 L.Ed.2d 610, which held that a licensee of a patent is not precluded by a contract from challenging the patent, for if he were, that would defeat the policy of the patent laws: 'enforcing this contractual provision would undermine the strong federal policy favoring the full and free use of ideas in the public domain.'

Here, petitioner and its *amici* propose to go much farther than merely (as in *Kewanee*) deciding whether a state law is in conflict with the policies and objectives of the federal patent law — instead arguing that the alleged federal policy favoring free competition among unpatented ideas *circumscribes the scope of protection that may be afforded to inventions under the federal patent law.* This makes no sense, especially in view of *Kewanee.* The scope of patent protection afforded by the United States patent laws should be determined solely by reference to the Constitutional objective of promoting the

progress of science and useful arts, and not by reference to a supposed "free competition" policy.[11]

D. The Sky Is Not Falling.

Petitioner and its *amici* state variously that the Federal Circuit's suggestion test has led to a "thicket" of trivial patents and an explosion of costly litigation. Further, they claim the multitude of patents resulting from the supposedly-degraded standard of patentability that court has established now threatens to clog the very engines of commerce and innovation. But in fact there is no evidence to support these claims, and no basis in any case for attributing such dramatic recent effects to the motivation-to-combine test, which the patent courts have applied, as far back as 1938, and which the Federal Circuit has applied since 1982.

1. There Is No Evidence Of An Inundation Of Trivial Patents

Petitioner and its *amici* claim the Federal Circuit's motivation-to-combine test, which the patent courts have applied for more than sixty years to distinguish obvious from non-obvious inventions, threatens now to bring commerce — and invention itself — to a grinding halt. The hard evidence they present of this looming disaster consists of two famously "light" patents and a remand in this case for further proceedings. These, they suggest, prove that the motivation-to-combine test has led to the issuance or validation of trivial patents. But these cases prove nothing. The pumpkin trash bag patent, in fact, *never issued.* Instead, the Examiner rejected and the Board of Patent Appeals sustained the Examiner's rejection of the application *three times.* On appeal, the Federal Circuit did not direct the patent to issue. It merely held the record was devoid of the findings necessary to sustain the PTO's obviousness rejection. *In re Dembiczak*,

---

11. Article I, § 8, cl. 8, of the Constitution grants to the Congress the power '(t)o promote the Progress of Science and useful Arts, by securing for limited Times to Authors and Inventors the exclusive Right to their respective Writings and Discoveries . . .'

175 F.3d 994, 996 (Fed. Cir. 1999). On remand, the Examiner made the required findings and the patent never issued.

The "Method of Swinging on a Swing" patent of which various *amici* complain issued but was never asserted in litigation (because it was never the patent holder's intention to enforce the patent), and was efficiently invalidated on reexamination. Neither of these examples illustrates a system on the verge of collapse. However this Court or Congress alters the legal standards for patentability, nothing will prevent applicants willing to pay the filing fee from claiming frivolous inventions and applying for trivial patents.

2. There Is No Evidence Of An Explosion Of Unnecessary Litigation

Petitioner and its *amici*, who among them hold tens if not hundreds of thousands of their own patents, also decry the supposed explosion of "unnecessary" patent litigation. (The unnecessary suits, we can suppose, are those they must defend.) But, again, they present scant evidence that any explosion of patent litigation has anything to do with the motivation-to-combine test. While petitioner and its *amici* all share the view that the patent challenged in this litigation is trivial, their sweeping criticism of the law as we know it is blunted by the fact that no court has yet disagreed with them. Their complaint seems to be that it is taking too long for the courts to decide that they are right.[12] But judicial proceedings are always costly and one party can invariably be expected to consider them unnecessary. We are heirs to a grand system of jurisprudence requiring that t's be crossed and i's be dotted to ensure fairness to litigants and ease of appellate review. If remands are more common in patent cases, although petitioner and its *amici* have presented nothing to suggest that they are, it is likely because a court of experts, the Federal Circuit, is reviewing the decisions

12. The United States argues, for example, that "those costly proceedings [arising from the remand in this case] are unnecessary." Br. at 22.

of lay judges and juries who generally have no special knowledge of either patent law or the complex subject matter—science, technology, mechanics, engineering—to which that law is typically applied.[13] If anything, the motivation-to-combine test encourages settlement, not litigation, because it yields results that can be predicted in any given case.

3. The Motivation-To-Combine Test Has Not Foreclosed Summary Judicial Determinations of Obviousness

Petitioner claims the motivation-to-combine test all but precludes summary judicial determinations of obviousness, Pet. Br. 16, 32, but that is simply wrong. While there are sound institutional reasons why the Federal Circuit could be expected to issue or affirm fewer summary decisions than do the regional circuit courts of appeals, there is not a shred of evidence to suggest that it has foreclosed judges from determining obviousness as a matter of law. Indeed, since March of this year, the Federal Circuit has affirmed (or reversed for entry of) judicial determination of obviousness in no fewer than seven cases.

a) The Federal Circuit *Should* Issue Fewer Summary Determinations Than The Regional Courts Of Appeals

If, as petitioner argues, the Federal Circuit issues or affirms few summary decisions, there are good reasons why it should. The Senate Report accompanying the legislation giving rise to the court actually predicted this would be the case:

> Although the workload per judgeship will be lighter here than in the other circuits, a reduced number of

---

13. Indeed, the Federal Circuit was created expressly to bring expertise to this area of the law because, as this Court has acknowledged, most of the judiciary "is most ill-fitted to discharge the technological duties cast upon it by patent legislation." *Graham v. John Deere Co.*, 383 U.S. 1, 36 (1966).

> appeals is desirable for this court. The Court of Appeals for the Federal Circuit will be considering cases that are unusually complex and technical. Consequently, its cases will be extraordinarily time-consuming, and fewer of them will be appropriate for summary disposition than is true of the cases that make up the dockets of the regional courts of appeals.

S. Rep. 97-275 [1981], *reprinted in* 1982 U.S.C.C.A.N. No. 11, *7, **17.

Moreover, it stands to reason that a court of experts such as the Federal Circuit reviewing the work of lay judges and juries would reverse and remand with instructions more frequently than would other courts of appeals of general jurisdiction reviewing the work of district courts with similar experience and expertise.

b) When Judicial Determination Is Appropriate, The Federal Circuit Has Not Hesitated To Issue Or Affirm Such A Determination

Petitioner concludes, apparently from its own theorizing, that the motivation-to-combine test precludes judicial determinations of obviousness. But this theory does not hold up to fact. In recent months, the Federal Circuit has issued no fewer than seven decisions upholding (and even reversing for entry of) judicial determinations of obviousness. *See Dystar Textilfarben GmbH & Co. Deuetschland KG v. C.H. Patrick Co.*, No. 06-1088, __ F.3d __, 2006 WL 2806461 (Fed. Cir. October 3, 2006) (reversing trial court's denial of JMOL of obviousness); *Alza Corp. v. Mylan Labs., Inc.*, No. 06-1019, __ F.3d __, 2006 WL 2556356 (Fed. Cir. Sept. 6, 2006) (affirming district court's judgment after bench trial that invention was obvious); *Ormco Corp. v. Align Technology, Inc.*, No. 05-126, __ F.3d __, 2006 WL 2493245 (Fed. Cir. Aug. 3, 2006)

(reversing and ordering entry of summary judgment of obviousness); *Rogers v. Desa Int'l, Inc.*, No. 02-1247, 2006 WL 1965660 (Fed. Cir. Jul. 13, 2006) (unpub'd) (affirming summary judgment of obviousness); *NPF Ltd. v. Smart Parts, Inc.*, No. 05-1273, 2006 WL 1876659 (Fed. Cir. June 27, 2006) (unpub'd) (affirming JMOL that prior art rendered patent obvious); *Abbott Labs. v. Andrx Pharms., Inc.*, 452 F.3d 1331 (Fed. Cir. 2006) (holding district court abused discretion in issuing preliminary injunction because substantial questions on obviousness precluded finding of likelihood of success on merits); *In re Kahn*, 441 F.3d 977 (Fed. Cir. 2006) (affirming Board of Patent Appeals and Interferences' conclusion that invention was unpatentable as obvious).

4. There Is No Evidence That The Patent System Is Thwarting Invention Or Commerce. To The Contrary, The Health Of Commerce And The Rapid Pace Of Innovation Over The Decades Since The Federal Circuit Was Created Can Fairly Be Attributed To A Patent System That Is, Finally, Working

Petitioner and its *amici* further agree that the patent system, and the Federal Circuit's motivation-to-combine test in particular, is now thwarting innovation and commerce. But again, they pull this claim out of thin air. In fact, innovation and commerce in inventions appear to be booming. According to government figures, intellectual property accounts for over half of all U.S. exports.[14] Forty percent of the United States' economic growth comes from intellectual properties. A recent study valued the total of U.S. intellectual property at approximately $5 trillion, or about one-half of the GDP.[15] Indeed, other than petitioner's plaint in the matter at hand, neither petitioner nor any *amicus*

14. See reports and statistics cited in Kevin Hassett and Robert Shapiro, The Economic Value of Intellectual Property, www.usaforinnovation.org/news/ip-master.pdf, pp. 16-24.

15. Hassett and Shapiro at pp. 18-19.

asserts, even anecdotally, that its own or another's inventive enterprise has, in fact, been somehow thwarted or even discouraged by a trivial patent issued to another party. In the absence of any actual evidence of hindrance, the experience of the past two decades suggests that the Federal Circuit policy has been "not too hot" and "not too cold," but "just right."

What petitioner and its *amici* propose would definitely make it cheaper to infringe. (They forget that benefit would inure not only to them but to their foreign competitors as well.) But it has already been shown that patent underprotection, which they are inviting, actually *chills* innovation and commerce. At the 1979 Judicial Conference of the United States Court of Customs and Patent Appeals, held while the legislation creating the Federal Circuit was pending, Robert Benson[16] shared his observations as Chair of the Patent Subcommittee of President Carter's Advisory Committee on the Domestic Policy Review for Industrial Innovation:

> [T]he problem that we were addressing was not the patent system *per se* but the problem of innovation in the U.S. and its apparent decline. And what are the reasons for the decline? So, we were looking at this problem from the point of view of creating an atmosphere which leads to greater innovation — the invention, the R&D work which is necessary to bring it along, the engineering, the marketing — with the concept that if products never got to the marketplace, the innovation process basically failed. In this perspective, the unanimous concern of the people on this committee, and I might say that it was an opinion shared by the other committees in the domestic policy review, was the fact that there is a lack of reliability in the patent grant. Patents just

16. Chairman of the Patent Section of the ABA in 1979 and Chair of the Patent Subcommittee of President Carter's Advisory Committee on the Domestic Policy Review for Industrial Innovation.

> aren't what they used to be. The people who used to invest in a patent on the idea that the protection of the patent would justify the investment are just not doing it anymore. . . .
>
> The overall, overriding concern of our group was the reliability of the patent grant.

Judicial Conference, *A Talk Show — A Federal Appellate Court With Exclusive Patent Jurisdiction: An Idea Whose Time Has Come?* 84 F.R.D. 429, 471 (1979) (Statement of B. Robert Benson.

As the years since the inception of the Federal Circuit have shown, robust and predictable patent protection does not thwart but rather encourages innovation. The economic experiment petitioner and its supporters ask this Court to launch is one that has already failed. This Court should not experiment with a legal framework for non-obviousness that appears to be operating with great success lest, through unintended consequences of well-meaning adjustments in the law, innovation and investment be chilled. Rather, the Federal Circuit — which deals with these issues on a day-to-day basis, and is certainly well aware of the effect its decisions have upon the progress of science and useful arts, should be permitted to continue its development and application of the law of non-obviousness within the overall structure afforded by this Court's decision in *Graham*, without further strictures.

E. The Federal Circuit's Motivation-To-Combine Test Is Of A Piece With This Court's Decisions in *Graham*, *Sakraida*, *Anderson's-Black Rock*, and *United States v. Adams*.

Petitioner suggests that the Federal Circuit has quietly overruled *Graham v. John Deere*, *Sakraida v. Ag Pro, Inc.*, 425 U.S. 273 (1976), *Anderson's-Black Rock, Inc. v. Pavement Salvage Co.*, 396 U.S. 57 (1969), and *United States v. Adams*, 383 U.S. 39 (1966) — the principal decisions of this Court

amplifying the Patent Statute's requirement of non-obviousness — by insisting that a patent examiner or a defendant in litigation cannot prove patent obviousness except by showing that there existed at the time of the invention a suggestion to combine distinct prior-art references. Petitioner further claims this showing is made practically impossible by the Court of Appeals' additional requirement that the suggestion be both written and explicit.

But petitioner's account of the motivation-to-combine test simply "highlight[s] the danger inherent in focusing on isolated *dicta* rather than gleaning the law of a particular area from careful reading of the full text of a group of related precedents for all they say that is dispositive and for what they hold." *Dystar Textilfarben GmbH v. C.H. Patrick Co.*, 2006 WL 2806466 at *11. For one thing, the motivation-to-combine test is just a functional refinement of *Graham* itself, which not only admonishes courts to "resist the temptation to read into the prior art the teachings of the invention in issue," *Graham*, 383 U.S. at 36, but also invites revision of its own application "based on the insights gained through experience," *id.* at 18. For another, the Federal Circuit has *never* required that the necessary suggestion to combine be either written *or* explicit.

Petitioner urges the Court to reject the motivation-to-combine test in favor of a rule that courts simply apply *Graham* as this Court has done in the half-dozen patent obviousness cases it has heard in the last forty years. But that would invite the same haphazard application of the obviousness law that reigned in the lower courts for decades before the advent of the Federal Circuit. Inferior courts must devise standards for putting this Court's broad directives into practice. It is one thing for this Court to guard against hindsight by its own standards in a handful of cases plainly not subject to further review; it is quite another thing for patent examiners and district courts to guard against hindsight unaided by objective standards in the thousands of obviousness decisions it is their business to make

in the first instance, and for the Federal Circuit to review those decision unaided by a record of objective findings.[17]

---

17. Congress acknowledged this Court's inability to hear every patent case in reporting on the legislation that gave rise to the Federal Circuit:

> "The Supreme Court now appears to be operating at — or close to — full capacity; therefore, in the future the court cannot be expected to provide much more guidance in legal issues than it now does. Yet the number and complexity of unsettled controversies in the law continues to grow. . . . Since the Supreme Court's capacity to review cases cannot be enlarged significantly, the remedy lies in some reorganization at the intermediate appellate level. . . . The creation of the Court of Appeals for the Federal Circuit provides such a forum for appeals from throughout the country in areas of the law where Congress determines that there is special need for national uniformity." S. Rep. No. 97-275 [1981], *reprinted in* 1982 U.S.C.C.A.N. 11, *3, **13.
>
> A panelist at the 1979 Judicial Conference of the United States Court of Customs and Patent Appeals observed: "There is another profound, institutional, philosophical reason why we should have the federal appellate court for the federal jurisdiction. It has to do with the easily demonstrable and demonstrated fact that the Supreme Court of the United States has rendered hopelessly inconsistent, mutually, internally contradictory decisions in *Graham v. John Deere*, *Anderson's-Black Rock* and the *"Cow Dung"* case [*Sakraida*] in the field of nonobviousness under 35 U.S.C. § 103. . . . The Supreme Court of the United States is in total legal disrepute because of these cases."

Judicial Conference, 84 F.R.D. at 474 (statement by Professor Irving Kayton)

1. The Federal Circuit has Implemented the *Graham* Standards and Advanced This Court's Directive To Guard Against Hindsight By Insisting That Determinations of Obviousness Be Supported by Explicit Findings

Petitioner and its supporting *amici* take the Federal Circuit to task for having allegedly refused to invalidate patents for plainly obvious inventions. However, when the offending decisions are read carefully, it is apparent that the Federal Circuit is not approving patents on obvious inventions, but merely requiring specific findings of fact so that a reviewing court can determine whether the obviousness decision was appropriately based upon evidence, or inappropriately based upon hindsight or vague, conclusory invocations of "common sense" or "common knowledge," without actual evidence.

Canvassing its own case law, the Federal Circuit recently made this exact point in *DyStar Textilfarben*, __ F.3d __, 2006 WL 2806466 at *9-*10, reversing the trial court's denial of the defendant's motion for JMOL of invalidity of the patent claims for obviousness:

> Our analysis in *Dembiczak* focused on an explicit teaching in the prior art not because our case law requires it, but because the Board had stated that "the [two cited] *references would have suggested* the application of . . . facial indicia to the prior art plastic trash bags." *Id.* at 1000 (emphasis added). We held the Board's obviousness determination legally insufficient because, in addition to failing to make *Graham* findings, the Board's analysis was "limited to a discussion of the ways that the multiple prior art references can be combined to read on the claimed invention", "rather than pointing to specific information in [the two references] that suggest the combination". *Id.* On appeal to this court, the Commissioner of Patents and Trademarks attempted

to defend the Board decision by laying out, using the *Graham* factors, a clear-and likely affirmable-rationale establishing the level of ordinary skill and explaining the motivation to combine. *Id.* at 1001. We declined to consider these arguments, newly raised on appeal, stating that they did "little more than highlight the shortcomings of the decision below." *Id.*

In *Ruiz,* as in *Dembiczak,* we vacated a conclusion of obviousness because the factfinder failed to make *Graham* factor findings. 234 F.3d at 660. Far from requiring evidence of an explicit motivation to combine, we suggested in *Ruiz* that there may have existed an *implicit* motivation to combine, based on testimony that the invention was an improvement over the prior art because it is "easy to install" and "low cost". *Id.* at 666. We explained that such "[e]vidence which suggests that the combination of two references would suggest the resulting improvement is one way in which to determine a reason, suggestion, or motivation to combine" and instructed the district court to consider the evidence on remand. *Id.*

Likewise, a close reading of *In re Lee* reveals that our objection was not to the Board's statement that "[t]he conclusion of obviousness may be made from common knowledge and common sense of a person of ordinary skill in the art without any specific hint or suggestion in a particular reference", but its utter failure to explain the "common knowledge and common sense" on which it relied. *See* 277 F.3d at 1341, 1344. *Lee* involved a patent combining a prior art video game instruction handbook describing a "demonstration mode" with a prior art television set having a menu display allowing video and audio adjustments. The Board, without comment, adopted

the Examiner's Answer, which merely stated that the combination of the two cited references "'would have been obvious to one of ordinary skill in the art since the demonstration mode is just a programmable feature which can be used in many different devices for providing automatic introduction by adding the proper programming software' and that 'another motivation would be that the automatic demonstration mode is user friendly and it functions as a tutorial.'" *Id.* at 1341. We explained that "[c]onclusory statements such as those here provided do not fulfill the agency's obligation" to explain all material facts relating to a motivation to combine. *Id.* at 1344. In other words, we instructed the Board to explain *why* "common sense" of an ordinary artisan seeking to solve the problem at hand would have led him to combine the references. We noted that our predecessor court held more than thirty years earlier that "common knowledge and common sense" were sufficient to establish a motivation to combine, *In re Bozek*, 416 F.2d 1385 (C.C.P.A.1969), and distinguished that case because, in Bozek, the examiner first "established that this knowledge was in the art". *Id.* at 1390. We instructed that assumptions about common sense cannot *substitute* for evidence thereof, as the Board attempted to do in *Lee*. 277 F.3d at 1345; *see also In re Zurko*, 258 F.3d 1379, 1383, 1385 (Fed.Cir.2001) (reversing as unsupported by substantial evidence a finding of motivation to combine cited references, where the Board adopted Examiner's unsupported assertion that claim limitation missing from cited references was "basic knowledge" and it "would have been nothing more than good common sense" to combine the references, and explaining that "[t]his assessment of basic knowledge and common sense was not based on any evidence in the record"); *In re Rouffet*,

> 149 F.3d 1350, 1357 (Fed.Cir.1998) (affirming finding of high level of ordinary skill and the Board's explanation as to why cited reference implicitly would suggest missing claim limitation to ordinary artisan, but reversing its reliance on high level of ordinary skill as basis of motivation to combine, and stating, "The Board did not, however, explain what specific understanding or technological principle within the knowledge of one of ordinary skill in the art would have suggested the combination. Instead, the Board merely invoked the high level of skill in the field of art. If such a rote invocation could suffice to supply a motivation to combine, the more sophisticated scientific fields would rarely, if ever, experience a patentable technical advance.")

Even the FTC Report cited by petitioner and almost every one of its supporting *amici* acknowledges that "The Federal Circuit . . . has [in its implementation of the suggestion test] sought to ensure that the PTO provides an administrative record susceptible to judicial review." FTC Report, p. 12.

Rather than being criticized for these decisions, the Federal Circuit should be applauded. Only by insisting upon a record that is susceptible to judicial review can the Federal Circuit assure that the policy and standards inherent in *Graham* and § 103 are being practiced in the trial courts and PTO.

2. The FTC Report's Discussion of the "Suggestion" Test Addresses a Nonexistent Problem

The FTC Report properly compliments the Federal Circuit for having adopted the suggestion test, FTC Report, pp. 11-12, acknowledging that the test "justifiably seeks to protect inventors from findings of obviousness based purely on hindsight" because "[g]ood ideas may well appear obvious after they had been disclosed, despite having been previously unrecognized." *Id.*

In contrast to the extreme characterizations of the Federal Circuit and its suggestion test by the petitioner and some *amici*, the only fault the Report attributes to the Federal Circuit and its suggestion test is that, in the hearings that led to the FTC Report, some participants "expressed concern . . . with some recent applications of this suggestion test," even though the "Federal Circuit's most recent articulations of the suggestion test seem to signal" a more acceptable implementation of the test. *Id.* According to the Report:

> To show that a claimed invention is obvious, some cases seem to require the PTO to point to particular items of prior art that concretely suggest how to *combine* all of the features of a claimed invention. Such an application of the suggestion test may have found that the claimed invention of the Selden patent — that is, putting a gasoline engine on a carriage — was not obvious, because there was no document that suggested that combination.
>
> Requiring concrete suggestions beyond those actually needed by a person with ordinary skill in the art, and failing to give weight to suggestions implicit from the art as a whole and from the nature of the problem to be solved, is likely to result in patents on obvious inventions and is likely to be unnecessarily detrimental to competition. The Federal Circuit's most recent articulations of the suggestion test seem to signal greater appreciation of these issues and would better facilitate implementation of the test in ways sensitive to competitive concerns.

FTC Report, p. 12

In other words, according to the Report, at the time it was written (October 2003), the Federal Circuit had already begun publishing decisions addressing the issues that concerned the

participants who had been critical of the court's earlier implementation of the suggestion test.

3. The Motivation-To-Combine Test Fairly Requires Concrete Suggestions Beyond Those Actually Needed by a Person with Ordinary Skill in the Art

Petitioner and its *amici* argue that the motivation-to-combine test, as applied, unfairly requires concrete suggestions beyond those actually needed by a person with ordinary skill in the art. This argument is wrong for two reasons. First, it incorrectly assumes that explicit suggestions are necessary under Federal Circuit authority, whereas implicit suggestions are sufficient. *Dystar Textilfarben*, 2006 WL 2806466 at *9. ("Each of the [Federal Circuit cases relied upon by petitioner and its *amici* to argue that explicit suggestions are necessary] correctly applies the suggestion test and by no means requires an explicit teaching to combine to be found in a particular prior art reference.")

Second, to the extent the motivation-to-combine test does not perfectly map the degree of suggestion actually needed by a person of ordinary skill in the art, it does not necessarily do so unfairly. The person of ordinary skill is not intended to be a real-world person in a real-world setting. Instead, the person of ordinary skill is a hypothetical person assumed to have omniscient knowledge of the relevant prior art[16] — a decidedly non-real-world setting, which gives the hypothetical person of ordinary skill a considerable advantage over a real-world person of ordinary skill. The reason that this evidence is required is to assure that obviousness has been determined on the basis of evidence, rather than by application of hindsight or vague, unsupported conclusory notions of "common sense" or "common knowledge."

Thus, to the extent the motivation-to-combine test requires a greater level of suggestion than might be necessary for a real-world person of ordinary skill — a dubious proposition in the

first place — there is good reason for it; and this arguably lesser than real-world standard is offset by the assumption that the all-knowing person of ordinary skill possesses greater than real-world knowledge of the prior art.

F. This Court Should Not Lightly Jettison The Court of Appeals' Reasoned and Exacting Requirements For Proving Obviousness.

1. An Uncertain Patent Privilege Is Little Better Than No Patent Privilege at All

"[Patent] clarity is essential to promote progress because it enables efficient investment in innovation." *Festo Corp. v. Shoketsu Kinzoku Kogyo Kabushiki Co.*, 535 U.S. 722, 730-731 (2002). If we intend to promote the progress of science and useful arts via awarding exclusive rights to inventors, with inventors and the persons who invest in them free from the apprehension that their achievements will be copied, then courts must work to apply the patent laws in ways that are predictable and certain. An uncertain patent right — or one that purports to be certain, but rests in widely varying applications by the courts — is little better than no patent right at all. Courts have expressed an oft-cited corollary principle with regard to the attorney-client privilege.

> If we intend to serve the interests of justice by encouraging consultation with counsel free from the apprehension of disclosure, then courts must work to apply the privilege in ways that are predictable and certain. "An uncertain privilege-or one which purports to be certain, but rests in widely varying applications by the courts-is little better than no privilege."

Rhone-Poulenc Rorer Inc. v. Home Indem. Co., 32 F.3d 851, 863 (3rd Cir. 1994) (quoting *In re von Bulow*, 828 F.2d 94, 100 (2d Cir. 1987)).

Indeed, Congress expressly predicted that "[b]usiness planning will become easier as more stable and predictable [patent] law is

introduced, observing that "[t]his can have important ramifications upon our economy as a whole." The Senate Report quoted the following testimony of Harry F. Manbeck, Jr., General Patent Counsel of the General Electric Company:

> Patents, in my judgment, are a stimulus to the innovative process, which includes not only investment in research and development but also a far greater investment in facilities for producing and distributing the goods. Certainly, it is important to those who must make these investment decisions that we decrease unnecessary uncertainties in the patent system.

(96th Cong. Hearings (Statements of Harry F. Manbeck and Donald R. Dunner, May 7, 1979.)) S. Rep. 97-275 [1981], 1982 U.S.C.C.A.N. 11, *8, **16. These statements have proved prescient. The Federal Circuit's introduction of clarity and stability to patent law has been followed by an unprecedented two decades of prosperity marked by dramatic increases in productivity and profit.

2. The Motivation-To-Combine Test Lends Structure And Integrity To The Examination Of Patents Both In Prosecution And In Litigation

As the Seventh Circuit observed in 1979, "the imprecision of the 'invention' standard resulted in an inconsistent and unpredictable body of law because it required that the decision of patentability be based ultimately upon the subjective whims of the reviewing court." *Republic Indus., Inc. v. Schlage Lock Co.*, 592 F.2d 963, 967 (7th Cir. 1979). The Federal Circuit has banished subjectivity from the law of obviousness by requiring that examiners and courts explain exactly what was in the prior art (or "in the air") at the time of the invention that would have taught, suggested or motivated a person skilled in the art to combine prior references to invent a given invention. Since humans are helpless before their own subjectivity, this requirement lends structure and integrity to the examination of patents both in prosecution and in litigation by framing the exchanges that occur in those contexts. How otherwise could a patent applicant, for example, respond to an examiner's

challenge that his invention seems obvious? By saying, "well it doesn't seem obvious to me"? This approach has already failed.

IV. CONCLUSION

"[T]he patent system is one in which uniform federal standards are carefully used to promote invention." *Sears, Roebuck & Co. v. Stiffel Co.*, 376 U.S. 225, 230 (1964). This Court must no less carefully consider petitioner's radical proposal to discard the Federal Circuit's decades-old standards for obviousness. On the one hand, petitioner and its supporting *amici* have made no showing that these standards have compromised the patent system, commerce or innovation itself. On the other hand, these standards — reflecting "insights gained through experience," as *Graham* contemplated — not only lend structure and integrity to the examination of patents, they also undergird the predictability upon which invention and commerce absolutely depend. The judgment of the Court of Appeals should be affirmed.

Respectfully submitted,

ROGER L. COOK
KEVIN L. BASTIAN
NANCY L. TOMPKINS
TOWNSEND AND TOWNSEND
AND CREW LLP
Two Embarcadero Center
Eighth Floor
San Francisco, CA 94111
(415) 576-0200

Attorneys for Amicus Curiae

141G 414

No. 04-1350

Supreme Court, U.S.
FILED
OCT 16 2006
OFFICE OF THE CLERK

IN THE

Supreme Court of the United States

KSR INTERNATIONAL CO.,

Petitioner,

v.

TELEFLEX, INC., *et al.*,

Respondents.

On Writ of Certiorari to the United States Court of Appeals for the Federal Circuit

BRIEF OF TESSERA, INC., QUALCOMM INC., AND AMBERWAVE SYSTEMS CORPORATION AS *AMICI CURIAE* IN SUPPORT OF RESPONDENTS

ADAM H. CHARNES
Counsel of Record
STEVEN GARDNER
FRANK W. LEAK, JR.
JON R. PIERCE
BRADLEY A. ROEHRENBECK
KILPATRICK STOCKTON LLP
1001 West Fourth Street
Winston-Salem, NC 27101
(336) 607-7300

Counsel for Amici Curiae

TABLE OF CONTENTS

Page

TABLE OF AUTHORITIES iii

INTEREST OF *AMICI CURIAE* 1

SUMMARY OF THE ARGUMENT 3

ARGUMENT 4

I. THE FEDERAL CIRCUIT'S TEACHING-SUGGESTION-MOTIVATION STANDARD IS CONSISTENT WITH BOTH THE PATENT ACT AND SUPREME COURT PRECEDENT. 4

A. The Teaching-Suggestion-Motivation Standard Has Long Been Applied By The Federal Circuit And Its Predecessor. 4

B. The Teaching-Suggestion-Motivation Standard Is Consistent With This Court's Decisions. 6

C. The Criticisms Of The Teaching-Suggestion-Motivation Test Offered By Petitioner And The United States Are Based On Assumptions, Not Empirical Evidence, And Are Disproved By The Data. 9

D. The Teaching-Suggestion-Motivation Standard Has Brought Stability and Predictability To The Law Of Obviousness. 11

E. The Court Should Reject The Alternative Standards Proposed By Petitioner And The United States. 12

Table of Contents—continued

Page

F. The Longevity And Consistent Application Of The Teaching-Suggestion-Motivation Standard Has Resulted In Substantial And Reasonable Reliance. 16

II. ABANDONMENT OF THE TEACHING-SUGGESTION-MOTIVATION TEST WOULD UNDERMINE INNOVATION IN THE U.S. ECONOMY AND HARM INNOVATIVE COMPANIES LIKE *AMICI*. 21

CONCLUSION 29

TABLE OF AUTHORITIES

CASES Page

ACS Hosp. Sys., Inc. v. Montefiore Hosp., 732 F.2d 1572 (Fed. Cir. 1984) 5-6

Advanced Tech. Materials, Inc. v. Praxair, Inc., No. 03 CV 5161(RO), 2006 WL 1006341 (S.D.N.Y. Apr. 18, 2006) 11

Allied Signal, Inc. v. Dir., Div. of Taxation, 504 U.S. 768 (1992) 20

Alza Corp. v. Mylan Labs., Inc., No. 06-1019, 2006 WL 2556356 (Fed. Cir. Sept. 6, 2006) 6

Anderson's-Black Rock, Inc. v. Pavement Salvage Co., 396 U.S. 57 (1969) 8

Aronson v. Quick Point Pencil Co., 440 U.S. 257 (1979) 21

Auto. Techs. Int'l, Inc. v. TRW Vehicle Safety Sys., Inc., No. 02-73572, 2006 WL 2794338 (E.D. Mich. Sept. 27, 2006) 11

B.G. Corp. v. Walker Kidde & Co., 79 F.2d 20 (2d Cir. 1935) 14

Bonito Boats, Inc. v. Thunder Craft Boats, Inc., 489 U.S. 141 (1989) 21

Dann v. Johnston, 425 U.S. 219 (1976) 8, 9

Dystar Textilfarben GmbH v. C.H. Patrick Co., No. 06-1088, 2006 WL 2806466 (Fed. Cir. Oct. 3, 2006) 8, 9

Table of Authorities—continued

Page

Ecolochem, Inc. v. S. Cal. Edison Co., 227 F.3d 1361 (Fed. Cir. 2000), *cert. denied*, 532 U.S. 974 (2001) 20

Festo Corp. v. Shoketsu Kinzoku Kogyo Kabushiki Co., 535 U.S. 722 (2002) 17

For Your Ease Only, Inc. v. Natural Sci. Indus., Ltd., No. 02 C 1584, 2003 WL 22112997 (N.D. Ill. Sept. 10, 2003), *aff'd*, 101 F. App'x 356 (Fed. Cir. 2004) 11

In re Fridolph, 134 F.2d 414 (C.C.P.A. 1943) 5

Graham v. John Deere Co., 383 U.S. 1 (1966) ..... *passim*

Greason v. Kemp, 891 F.2d 829 (11th Cir. 1990) 15

IXYS Corp. v. Advanced Power Tech., Inc., 321 F. Supp. 2d 1133 (N.D. Cal. 2004) 11

In re Johnston, 502 F.2d 765 (C.C.P.A. 1974) 8

Kahn v. Gen. Motors Corp., 135 F.3d 1472 (Fed. Cir. 1998) 13-14

Kewanee Oil Co. v. Bicron Corp., 416 U.S. 470 (1974) 22

In re Khan, 441 F.3d 977 (Fed. Cir. 2006) 7

Langston v. Sw. Bell Tel. Co., 945 F.2d 416 (Fed. Cir. 1991), *cert. denied*, 503 U.S. 914 (1992) 20

Table of Authorities—continued

Page

Markman v. Westview Instruments, Inc., 517 U.S. 370 (1996) 19

Medtronic, Inc. v. Daig Corp., 789 F.2d 903 (Fed. Cir.), *cert. denied*, 479 U.S. 931 (1986) 20

Modine Mfg. Co. v. Allen Group, Inc., 917 F.2d 538 (Fed. Cir. 1990), *cert. denied*, 500 U.S. 918 (1991) 20

Nickson Indus., Inc. v. Rol Mfg. Co., 765 F.2d 160 (Fed. Cir.), *cert. denied*, 474 U.S. 843 (1985) 20

Payne v. Tennessee, 501 U.S. 808 (1991) 20

Polaroid Corp. v. Eastman Kodak Co., 789 F.2d 1556 (Fed. Cir.), *cert. denied*, 479 U.S. 850 (1986) 20

Powdermagic, Ltd. v. Rossignol Ski Co., No. 1:04CV00133, 2005 WL 3981617 (D. Utah Aug. 4, 2005) 11

Quill Corp. v. North Dakota, 504 U.S. 298 (1992) 20

Randall v. Sorrell, 126 S. Ct. 2479 (2006) 20

Rhone Poulenc Agro, S.A. v. DeKalb Genetics Corp., 272 F.3d 1335 (Fed. Cir. 2001), *vacated on other grounds*, 538 U.S. 974 (2003) 7

Table of Authorities—continued

Page

Robinson Labs, Inc. v. Walls Indus., Inc., No. Civ. 01-1604 JNEJGL, 2003 WL 22272122 (D. Minn. Sept. 30, 2003) 11

Sakraida v. Ag Pro, Inc., 425 U.S. 273 (1976) 8

In re Sernaker, 702 F.2d 989 (Fed. Cir. 1983) 5, 6

In re Shaffer, 229 F.2d 476 (C.C.P.A. 1956) 5

Sipp v. Unumprovident Corp., 107 F. App'x 867 (10th Cir. 2004) 15

Sprint Airlines, Inc. v. Northwest Airlines, Inc., 431 F.3d 917 (6th Cir. 2005) 15

Teleflex, Inc. v. KSR Int'l Co., 119 F. App'x 282 (Fed. Cir. 2005) 7

United States v. Int'l Bus. Machs. Corp., 517 U.S. 843 (1996) 20

Upsher-Smith Labs., Inc. v. Pan Am. Labs., Inc., No. Civ. 01-352ADMAJB, 2003 WL 22999551 (D. Minn. Dec. 19, 2003), *aff'd*, 412 F.3d 1319 (Fed. Cir. 2005) 11

Warner-Jenkinson Co. v. Hilton Davis Chem. Co., 520 U.S. 17 (1997) 19

CONSTITUTION, STATUTES, AND LEGISLATIVE HISTORY

H.R. REP. NO. 82-1923 (1952) 17

H.R. REP. NO. 97-312 (1981) 18

Table of Authorities—continued

Page

Hearings on the Fed. Courts Improvement Act of 1979 Before the S. Judiciary Subcomm. on Improvements in Judicial Machinery, 96th Cong. (1979) 18-19

S. REP. NO. 97-275 (1981), *reprinted in* 1982 U.S.C.C.A.N. 18

35 U.S.C. § 103(a) ..... *passim*

35 U.S.C. § 282 13

U.S. CONST. art. I, § 8, cl. 8 ..... 4, 21

OTHER AUTHORITIES

Daron Acemoglu, *et al.*, *Vertical Integration and Distance to Frontier*, 1 J. EUR. ECON. ASS'N 630 (2003) 22

Andrew Beckerman-Rodau, *Patent Law—Balancing Profit Maximization and Public Access to Technology*, 4 COLUM. SCI. & TECH. L. REV. 1 (2002) 22, 27, 28

Dan L. Burk & Mark A. Lemley, *Policy Levers in Patent Law*, 89 VA. L. REV. 1575 (2003) 22

CHI Research, Inc., *Small Firms and Technology: Acquisitions, Inventor Movement, and Technology Transfer* (2004) (available at http://www.sba.gov/advo/research/rs233tot.pdf) 24

Table of Authorities—continued

Page

CHI Research, Inc., *Small Serial Innovators: The Small Firm Contribution to Technical Change* (2003) (available at http://www.sba.gov/advo/research/rs225tot.pdf) 23-24, 27

2 Donald S. Chisum, *Chisum on Patents* (2006) 13

Commission on Revision of the Fed. Court Appellate Sys., *Recommendations for Change*, 67 F.R.D. 195 (1975) 17, 18

Christopher A. Cotropia, *Nonobviousness and the Federal Circuit: An Empirical Analysis of Recent Case Law*, NOTRE DAME L. REV. (forthcoming) (available at http://papers.ssrn.com/abstract_id=933192)..... 10, 11

Council on Competitiveness, *Innovate America: National Innovation Initiative Final Report* (2004) (available at http://www.publicforuminstitute.org/nde/sources/NII_Final_Report.pdf) 23, 27

FED. TRADE COMM'N, TO PROMOTE INNOVATION: THE PROPER BALANCE OF COMPETITION AND PATENT LAW AND POLICY (2003)..... 16

Gary Hamel, *Bringing Silicon Valley Inside*, HARV. BUS. REV., Sept.-Oct. 1999 22

Table of Authorities—continued

Page

Richard N. Langlois, *The Vanishing Hand: The Changing Dynamics of Industrial Capitalism*, 12 INDUS. & CORP. CHANGE 351 (2003) 22

Mark A. Lemley, *Reconceiving Patents in the Age of Venture Capital*, 4 J. SMALL EMERGING BUS. L. 137 (2000) 27

Gregory Mandel, *Patently Non-Obvious II: Experimental Study on the Hindsight Issue Before the Supreme Court in KSR v. Teleflex* (Aug. 15, 2006) (available at http://papers.ssrn.com/abstract_id=928662) 10

Sean M. McEldowney, *New Insights on the "Death" of Obviousness: An Empirical Study of District Court Obviousness Opinions*, 2006 STAN. TECH. L. REV. 4 12

Lee Petherbridge & R. Polk Wagner, *The Federal Circuit and Patentability: An Empirical Assessment of the Law of Obviousness* (Loyola-LA Legal Studies, Research Paper No. 2006-21, Aug. 18, 2006) (available at http://papers.ssrn.com/ abstract_id=923309) 6, 10, 12, 13

REPORT OF THE DEFENSE SCIENCE BOARD TASK FORCE ON HIGH PERFORMANCE MICROCHIP SUPPLY (Feb. 2005) (available at http://www.acq.osd.mil/dsb/reports/2005-02-HPMS_Report_Final.pdf) 25

Table of Authorities—continued

Page

Karen D. Schwartz, *Can You Spell Disaggregation?* (Feb. 1, 2003) (available http://www.edn.com/article/CA271755.html?ref=nbsa) 25

STAFF OF JOINT ECONOMIC COMM., ENTREPRENEURS CREATING THE NEW ECONOMY (2000) (available at http://www.cato.org/research/articles/edwards11-00.pdf) 22, 23, 24

Robert Greene Sterne, *et al.*, *The 2005 U.S. Patent Landscape for Electronic Companies*, 823 *PLI/Pat* 293 (2005) 27

Timothy J. Sturgeon, *Modular Production Networks: A New American Model of Industrial Organization*, 11 INDUS. & CORP. CHANGE 451 (2002) 22

12 THE WORKS OF THOMAS JEFFERSON (Paul Leicester Ford, ed., 1905) 14

INTEREST OF *AMICI CURIAE*[1]

Tessera, Inc. ("Tessera"), is a leading provider of miniaturization technologies enabling the semiconductor industry to build smaller, faster, and more reliable electronic products. Tessera presently has over 360 issued United States patents and over 60 licensees in the area of computer chip packaging technology, including the world's top semiconductor companies such as Intel, Samsung, Renesas, Toshiba and Texas Instruments, as well as a number of universities. More than eight billion semiconductors worldwide incorporate Tessera's technology. Tessera's technologies are widely adopted in high-growth markets, including consumer, computing, communications, medical, and defense electronics. Tessera's ability to continue to innovate depends upon its ability to license its technology and enforce its patents.

QUALCOMM Inc. ("Qualcomm") is a leading developer and innovator of Code Division Multiple Access ("CDMA") and other advanced wireless technologies. Qualcomm presently has more than 4,000 United States patents and patent applications. Qualcomm designs, manufactures, has manufactured on its behalf, and markets digital wireless telecommunications products and services based on its CDMA and other technologies. Qualcomm's technology and semiconductor products are widely used in the manufacture of cellular telephones and other wireless devices. Qualcomm has licensed its technology to more than 125 leading telecommunications and consumer electronics equipment manufacturers around the world. Qualcomm derives revenue

---

[1] Pursuant to Supreme Court Rule 37.6, *amici curiae* state that counsel for *amici* authored this brief in its entirety. No person or entity other than *amici* and their counsel made a monetary contribution to the preparation of this brief. The parties have filed blanket letters of consent with the Clerk of the Court.

principally from sales of integrated circuit products, license fees and royalties for use of its intellectual property, services and related hardware sales, and software development and licensing.

AmberWave Systems Corporation ("AmberWave") is a leading developer of strained silicon technology and other advanced semiconductor materials and devices. The company's strained silicon technology is a result of more than fifteen years of research at MIT, AT&T Bell Labs, and its own research facility. AmberWave continues to develop the next generation of semiconductor material and device technologies by partnering its research capabilities with world-class institutions. AmberWave has assembled a portfolio of over 150 issued and pending patents, has raised over $90 million in venture capital funding, and licenses its technology to semiconductor equipment, wafer, and chip manufacturers. AmberWave complements its intellectual property licenses with a range of manufacturing and technical support services enabling its licensees to integrate the licensed technology into advanced manufacturing processes.

Each of the *amici* invests millions of dollars annually in research and development in their respective fields. Each also actively licenses the fruits of its development to other advanced technology companies. This business model brings a level of specialization and efficiency to the nation's high-technology industries and depends, in significant part, on the maintenance of strong patent laws. The teaching-suggestion-motivation test, which has a long pedigree in patent law and a history of consistent application by the Federal Circuit, is essential to the proper application of section 103 of the Patent Act. The alternative standards for non-obviousness advocated by petitioner and the United States would, if adopted, discourage innovation and investment in research and development in high-technology industries, harm the viability of research-and-development-driven business models such as those of *amici*, and thereby undermine the ability of the

United States to maintain technological leadership in the 21st century. Since the United States' economy rests on our technological strength, the radical departure in the law of non-obviousness sought by petitioner and the United States is not in the public interest.

SUMMARY OF THE ARGUMENT

This Court should reject the attempt by petitioner and its *amici* to overturn the United States Court of Appeals for the Federal Circuit's "teaching-suggestion-motivation" standard. That standard properly implements the non-obviousness requirement of 35 U.S.C. § 103(a) as interpreted by this Court's decision in *Graham v. John Deere Co.*, 383 U.S. 1 (1966). It has been consistently applied by the Federal Circuit and its predecessor for more than sixty years. It is a barrier to the ever-present risk of reliance on hindsight in determining obviousness. Because the teaching-suggestion-motivation standard requires objective evidence of obviousness, it also provides an essential measure of stability and predictability to inventors, the innovative companies that employ them, and the investors that make research possible. And its consistent application by the Federal Circuit, and this Court's regular practice over the course of twenty-five years declining to review any of those decisions, has induced substantial and reasonable reliance.

The criticisms of the teaching-suggestion-motivation standard offered by petitioner and its *amici* are without merit. The empirical evidence establishes that the teaching-suggestion-motivation standard has not lowered the standard for patentability, nor has it made summary judgment on obviousness difficult or impossible to obtain. On the other hand, petitioner and the United States propose alternative standards that are inconsistent with the Patent Act and that are wholly subjective and would thus destroy the predictability required for adequate investment in innovation.

Finally, abandoning the teaching-suggestion-motivation standard would strike a significant blow to the innovation required for the United States to maintain a vibrant, growing economy in the 21st century. While innovation traditionally has been the domain of large, vertically integrated companies, today it is increasingly occurring at specialized technology companies—such as *amici* Tessera, Qualcomm, and AmberWave—that are focused on developing new technologies through research and then licensing those technologies to other businesses. Such companies are dependent on the availability of financing from venture capital and the public markets. A strong, predictable, and reliable patent system is a necessary prerequisite for the technological and economic success of such companies because management and investors must rely on patents to protect the economic viability of their inventions. The weakening of the patent system—whether by making patentability more unpredictable or more difficult to achieve—would severely undermine this innovative component of the nation's research and development community, and it thereby would retard, not promote, "the progress of science." U.S. CONST. art. I, § 8, cl. 8.

ARGUMENT

I. THE FEDERAL CIRCUIT'S TEACHING-SUGGESTION-MOTIVATION STANDARD IS CONSISTENT WITH BOTH THE PATENT ACT AND SUPREME COURT PRECEDENT.

A. The Teaching-Suggestion-Motivation Standard Has Long Been Applied By The Federal Circuit And Its Predecessor.

Petitioner claims that, in adopting the teaching-suggestion-motivation test, the Federal Circuit adopted a "radical reinterpretation of § 103(a)." Pet. Br. 28. This assertion simply is untrue. In fact, the teaching-suggestion-motivation standard has a pedigree dating back more than sixty years.

During the 1940s, the Court of Customs and Patent Appeals ("CCPA"), the predecessor of the Federal Circuit, regularly applied a variation of that standard to determine whether references were properly combined. *See, e.g., In re Fridolph*, 134 F.2d 414, 416 (C.C.P.A. 1943) ("[I]n considering more than one reference, or a reference alleged not to be in the art involved, the question always is: does such art suggest doing the thing which the appellant has done? We think the art of record clearly suggests doing what appellant has done."). Within the CCPA, the suggestion test eventually became the settled, objective tool for determining when a rejection of an invention based on combination of known elements was appropriate. *See, e.g., In re Shaffer*, 229 F.2d 476, 479 (C.C.P.A. 1956) ("to determine whether the combination of references is proper, the following criterion is often used: namely, whether the prior art suggests doing what the applicant has done").

In 1982, the Federal Circuit inherited the exclusive jurisdiction of the CCPA to review Patent Office decisions, and it adopted the CCPA's decisions as its own binding precedent. *See In re Sernaker*, 702 F.2d 989, 994 (Fed. Cir. 1983). The Federal Circuit continued to apply and refine the teaching-suggestion-motivation standard. In *Sernaker*, one of the earliest Federal Circuit decisions addressing obviousness based on prior art combination, the court inquired "whether a combination of the teachings of all or any of the references would have suggested (expressly or by implication) the possibility of achieving further improvement by combining such teachings along the line of the invention in suit . . . ." *Id.* at 994. One year later, the Federal Circuit noted that "obviousness cannot be established by combining the teachings of the prior art to produce the claimed invention, absent some teaching or suggestion supporting the combination. Under § 103, teachings of references can be combined *only* if there is some suggestion or incentive to do so." *ACS Hosp. Sys., Inc. v. Montefiore Hosp.*, 732 F.2d

1572, 1577 (Fed. Cir. 1984) (footnote omitted) (emphasis in the original). The teaching-suggestion-motivation test, as it has now become known, consistently has been applied by the Federal Circuit since *Sernaker* and *ACS Hospital*.

B. The Teaching-Suggestion-Motivation Standard Is Consistent With This Court's Decisions.

Both petitioner and the United States argue that the teaching-suggestion-motivation test flouts this Court's precedent, particularly *Graham*. Pet. Br. 20-27; U.S. Br. 10. This argument is unfounded. As one study recently concluded: "Over the years the Federal Circuit has paid great homage to the decision in *Graham*. Not only has it consistently relied on the Supreme Court's factor-based approach to determining the question of obviousness, it has also accepted the Supreme Court's invitation for appellate court involvement." Lee Petherbridge & R. Polk Wagner, *The Federal Circuit and Patentability: An Empirical Assessment of the Law of Obviousness* 13 (Loyola-LA Legal Studies, Research Paper No. 2006-21, Aug. 18, 2006) (hereinafter "Petherbridge & Wagner") (available at http://papers.ssrn.com/abstract_id=923309).

The Federal Circuit has employed the teaching-suggestion-motivation test to "inform[] the *Graham* analysis" and to "prevent[] statutorily proscribed hindsight reasoning when determining the obviousness of an invention." *Alza Corp. v. Mylan Labs., Inc.*, No. 06-1019, 2006 WL 2556356, at *3 (Fed. Cir. Sept. 6, 2006). As the Federal Circuit has explained:

> To reach a non-hindsight driven conclusion as to whether a person having ordinary skill in the art at the time of the invention would have viewed the subject matter as a whole to have been obvious in view of multiple references, the Board must provide some rationale, articulation, or reasoned basis to explain why the conclusion of obviousness is correct.

In re Khan, 441 F.3d 977, 987 (Fed. Cir. 2006). In short, under the teaching-suggestion-motivation standard, a court cannot simply presume that a person of ordinary skill would have combined the references, nor can it rely on mere expert testimony not itself supported by objective evidence. *See Rhone Poulenc Agro, S.A. v. DeKalb Genetics Corp.*, 272 F.3d 1335, 1358 (Fed. Cir. 2001), *vacated on other grounds*, 538 U.S. 974 (2003). To guard against hindsight reconstruction, the Federal Circuit merely requires that the lower courts make findings and supply their reasoning for why there is a teaching, suggestion, or motivation to combine sources of prior art, whether it be implicit (in cases of well-known principles) or explicit (when there is a clear statement in the reference).[2] This requirement is consistent with the language of 35 U.S.C. § 103(a) ("if the differences between the subject matter sought to be patented and the prior art are such that the subject matter as a whole would have been obvious . . . to a person of ordinary skill") and with *Graham*'s four-factor non-obviousness inquiry ("the scope and content of the prior art" must be determined, 383 U.S. at 17).[3]

---

[2] For example, the Federal Circuit in remanding this case stated that "[u]nder our case law, whether based on the nature of the problem to be solved, the express teachings of the prior art, or the knowledge of one of ordinary skill in the art, the district court was required to make specific findings as to whether there was a suggestion or motivation to combine . . . ." *Teleflex, Inc. v. KSR Int'l Co.*, 119 F. App'x 282, 288 (Fed. Cir. 2005) (unpublished).

[3] Petitioner suggests that the teaching-suggestion-motivation standard permits patents based on "trivial" patents that represent insignificant changes to the prior art. Pet. Br. 46. Petitioner, however, misreads the Federal Circuit's precedent. In situations involving matters of common knowledge, there is no need for there to be an explicit suggestion in the prior art to make the combination. According to the Federal Circuit, in these situations involving challenges to non-obviousness based on elements and principles that were well-known in the prior art, "[n]o explicit suggestion to combine the prior art references would have been

Petitioner argues that the Federal Circuit deviated from this Court's precedent because the Court "never held that a proven 'teaching, suggestion, or motivation to combine prior art teachings in the particular manner claimed in a patent,' is a *prerequisite* to declaring claimed subject matter unpatentable." Pet. Br. 19 (emphasis in original). But the fact that the Federal Circuit has further developed and elaborated on the *Graham* approach does not represent lack of fealty to that holding. Indeed, it is the business of the courts of appeals to develop and elaborate on this Court's decisions.

Petitioner relies most heavily on *Anderson's-Black Rock, Inc. v. Pavement Salvage Co.*, 396 U.S. 57 (1969), and *Sakraida v. Ag Pro, Inc.*, 425 U.S. 273 (1976). Those decisions are consistent with the teaching-suggestion-motivation standard. That standard required no detailed discussion in either case because the obviousness inquiry was straightforward. In *Anderson's-Black Rock*, persons of ordinary skill would have been motivated by an interest in improving efficiency in an already-known process. *See Dystar*, 2006 WL 2806466, at *12. In *Sakraida*, the Court noted that "[e]xploitation of the principle of gravity adds nothing to the sum of useful knowledge . . . ." 425 U.S. at 282. Thus, in *Sakraida* there was no need for this Court to inquire into the existence of evidence of a motivation to combine prior art references with a universally known law of nature.

Petitioner also relies on *Dann v. Johnston*, 425 U.S. 219 (1976), in which the Court held that the claimed subject matter was unpatentable, even though the CCPA stated that the prior art reference was "not suggestive of the subject matter of the appealed [patent] claims." *In re Johnston*, 502 F.2d 765, 772 (C.C.P.A. 1974). In *Dann*, however, the Court

---

necessary." *See Dystar Textilfarben GmbH v. C.H. Patrick Co.*, No. 06-1088, 2006 WL 2806466, at *24 (Fed. Cir. Oct. 3, 2006).

gave considerable weight to the "extensive" "use of data processing equipment and computer programs in the banking industry." 425 U.S. at 227. According to the Court, the combination of this known technology, the similarity of the systems and fields in which they are used, and the prior art patent disclosing automated data processing was enough to render the claimed invention obvious. *Id.* at 229. Thus, the Court's recognition of an *implicit* suggestion in the prior art is consistent with Federal Circuit precedent. *See Dystar*, 2006 WL 2806466, at *17 ("When not from the prior art references, the 'evidence' of motive will likely consist of an *explanation* of the well-known principle or problem-solving strategy to be applied.").

C. The Criticisms Of The Teaching-Suggestion-Motivation Test Offered By Petitioner And The United States Are Based On Assumptions, Not Empirical Evidence, And Are Disproved By The Data.

Underlying the criticisms of the teaching-suggestion-motivation test by petitioner and the United States are assumptions lacking empirical support. They assert that by adopting the teaching-suggestion-motivation test, the Federal Circuit has improperly relaxed the non-obviousness requirement imposed in 35 U.S.C § 103(a) and applied in *Graham*. Pet. Br. 6, 16, 33; U.S. Br. 23. They also assert that the teaching-suggestion-motivation standard makes it difficult for parties—presumably defendants—to obtain summary judgment. Pet. Br. 34; U.S. Br. 20.

Notably absent from their briefs or the sources on which they rely, however, is any *evidence* supporting such claims. To the contrary, recent research refutes these assertions.

First, the evidence contradicts the assertion that the Federal Circuit has weakened the non-obviousness requirement. According to one recent study, "the Federal Circuit reaches an obvious outcome nearly sixty-percent of the time it addresses

the issue . . . ." Petherbridge & Wagner, *supra*, at 42. Moreover, directly contrary to petitioner's and the United States' claims, "[a]s the [teaching-suggestion-motivation] analysis has become more prominent in Federal Circuit opinions, the rate at which the Federal Circuit reached a nonobvious outcome *decreased*." *Id.* at 52 (emphasis added). The authors of the study conclude that the teaching-suggestion-motivation standard "might be bringing a clarity to the law of obviousness that is helping rather than hindering the demonstration of obviousness." *Id.* at 49.

Another study "did not show a significant difference between the Federal Circuit's handling of a lower court's finding of nonobvious as compared to a finding of obvious." Christopher A. Cotropia, *Nonobviousness and the Federal Circuit: An Empirical Analysis of Recent Case Law* 23, NOTRE DAME L. REV. (forthcoming) (available at http://papers.ssrn.com/abstract_id=933192). A different study found that "[m]ock jurors who received a jury instruction to apply the suggestion requirement were no more likely to conclude that an invention was non-obvious than mock jurors who received no suggestion instruction." Gregory Mandel, *Patently Non-Obvious II: Experimental Study on the Hindsight Issue Before the Supreme Court in KSR v. Teleflex* 2 (Aug. 15, 2006) (available at http://papers.ssrn.com/abstract_id=928662).

Second, the assertion that the teaching-suggestion-motivation standard prevents the granting of summary judgment also is disproved by the evidence. Despite petitioner's claim that the teaching-suggestion-motivation standard "renders summary judgment all but unattainable on § 103 issues" (Pet. Br. 33), a quick search reveals numerous recent district court decisions granting summary judgment on

grounds of obviousness.[4] Summary judgment on obviousness, therefore, is far from "unattainable." Moreover, over the four-year period from 2002 through 2005, the Federal Circuit heard 41 appeals of summary judgments involving obviousness, and affirmed almost 40% of them. *See* Cotropia, *supra*, at 38. One study analyzed all Federal Circuit summary judgment appeals involving the issue of obviousness over that period and concluded that the teaching-suggestion-motivation standard was a "barrier to summary judgment" in fewer than 20% of those appeals, and thus "play[ed] a very small role in preventing summary judgment." *Id.* at 42.

In short, the empirical evidence refutes the factual underpinnings of the challenge to the teaching-suggestion-motivation standard offered by petitioner and the United States. Theirs is a solution in search of a problem.

D. The Teaching-Suggestion-Motivation Standard Has Brought Stability and Predictability To The Law Of Obviousness.

The Federal Circuit's teaching-suggestion-motivation standard has succeeded in bringing needed clarity and

---

[4] *See, e.g., Auto. Techs. Int'l, Inc. v. TRW Vehicle Safety Sys., Inc.*, No. 02-73572, 2006 WL 2794338, at *7 (E.D. Mich. Sept. 27, 2006); *Advanced Tech. Materials, Inc. v. Praxair, Inc.*, No. 03 CV 5161(RO), 2006 WL 1006341, at *8 (S.D.N.Y. Apr. 18, 2006); *Powdermagic, Ltd. v. Rossignol Ski Co.*, No. 1:04CV00133, 2005 WL 3981617, at *6 (D. Utah Aug. 4, 2005); *IXYS Corp. v. Advanced Power Tech., Inc.*, 321 F. Supp. 2d 1133, 1156 (N.D. Cal. 2004); *Upsher-Smith Labs., Inc. v. Pan Am. Labs., Inc.*, No. Civ. 01-352ADMAJB, 2003 WL 22999551, at *7 (D. Minn. Dec. 19, 2003), *aff'd*, 412 F.3d 1319 (Fed. Cir. 2005); *Robinson Labs, Inc. v. Walls Indus., Inc.*, No. Civ. 01-1604 JNEJGL, 2003 WL 22272122, at *7 (D. Minn. Sept. 30, 2003); *For Your Ease Only, Inc. v. Natural Sci. Indus., Ltd.*, No. 02 C 1584, 2003 WL 22112997, at *9 (N.D. Ill. Sept. 10, 2003), *aff'd*, 101 F. App'x 356 (Fed. Cir. 2004) (unpublished).

predictability to the law of obviousness. The non-obviousness doctrine as applied by the Federal Circuit is "fairly stable and predictable," *see* Petherbridge & Wagner, *supra*, at 31, and has not engendered confusion among the district courts or caused practical problems in application. For example, one study found that, from 1990 to 2005, the Federal Circuit affirmed judgments rendered on obviousness grounds 65.0% of the time while reversing only 22.9%. *Id.* This reversal rate is significantly *lower* than the reported reversal rate by the Federal Circuit of lower court decisions on claim construction issues, which studies suggest ranges from 33% to 50%. *See id.* at 33. This reversal rate also compares favorably to the likelihood that the Federal Circuit will reverse written opinions across all issues in patent cases, which is 47.3%. *See id.* at 32.

The stability and predictability of the non-obviousness jurisprudence since the inception of the Federal Court stands in marked contrast to the jurisprudence before that court was created. "In the legislative history leading up to the court's creation, the most often-cited example of instability and regional variation was the obviousness doctrine." Sean M. McEldowney, *New Insights on the "Death" of Obviousness: An Empirical Study of District Court Obviousness Opinions*, 2006 STAN. TECH. L. REV. 4, ¶ 10. This "instability and regional variation" existed *despite* this Court's active docket of obviousness cases. This Court should hesitate before overturning this well-settled doctrine that has achieved stability and predictability.

E. The Court Should Reject The Alternative Standards Proposed By Petitioner And The United States.

The subjective alternatives to the teaching-suggestion-motivation standard proposed by petitioner and the United States should be rejected. They are little more than invitations to return to the days of vague and ambiguous obviousness standards that provided little guidance and still

less predictability to inventors, investors, and the lower courts.[5]

Although petitioner devotes the vast bulk of its brief to criticizing the teaching-suggestion-motivation standard, it spends precious little time articulating (let alone defending) the alternative standard it asks this Court to adopt. To the extent that an intelligible principle can be gleaned from the brief, petitioner appears to suggest that a combination of pre-existing elements is obvious where it "perform[s] or produce[s] no new or different function or operation."[6] Pet. Br. 23; *see also id.* at 43.

Petitioner's standard is inadequate for several reasons.[7] First, it impermissibly reverses the statutory presumption of validity applicable to all patents. *See* 35 U.S.C. § 282 ("A patent shall be presumed valid."); *see also Kahn v. Gen.*

---

[5] Prior to introduction of the *Graham* standard, early decisions developed a number of so-called "negative rules of invention" that were simply statements that certain alterations of known elements did not constitute an invention. The so-called "synergistic result" or "new or different function" are examples of these negative rules. *See* 2 Donald S. Chisum, *Chisum on Patents* § 5.04[5][b] (2006). Commentators have suggested that the enactment of 35 U.S.C. § 103(a) and the *Graham* decision substituted a more objective analysis for these negative rules. *See id.* Injecting negative rules into non-obviousness analysis of combination claims is unnecessary and would generate confusion and unpredictability.

[6] Notably absent from petitioner's explanation of its proposed standard is reference to the four *Graham* factors. Most of the Supreme Court precedent relied on by petitioner (Pet Br. 22 n.17), to which they request that the Supreme Court adhere, was decided before the 1952 Patent Act and *Graham*.

[7] In addition to discussing the proper standard for determining obviousness, both petitioner and the United States argue that the patent at issue in this case is invalid under § 103(a). Pet. Br. 43; U.S. Br. 27-30. *Amici* take no position as to the obviousness *vel non* of the patent under the teaching-suggestion-motivation standard.

Motors Corp., 135 F.3d 1472, 1480 (Fed. Cir. 1998) ("An issued patent is presumed to be valid and, hence, nonobvious."). While a presumption is "just" a presumption (Pet. Br. 41 n.34) and a court certainly can disagree with the Patent and Trademark Office based on appropriate considerations, the Court cannot exempt wholesale a category of patents from the presumption established by Congress.

Second, petitioner's denigration of inventions that consist of combinations of existing elements is non-sensical. Thomas Jefferson noted almost two centuries ago that "one new idea leads to another, that to a thi d, and so on through a course of time until some one, with whom no one of these ideas was original, combines all together, and produces what is justly called a new invention." 12 THE WORKS OF THOMAS JEFFERSON 88 (Paul Leicester Ford, ed., 1905). Learned Hand observed more recently that *every* invention may be characterized as a combination of old elements: "the defendant argues that the supposed invention is no more than a substitution of materials familiar to the art in the same uses; an aggregation of which each part performs what it did before. We may conclude as much, arguendo, for the same may be said of every invention." *B.G. Corp. v. Walker Kidde & Co.*, 79 F.2d 20, 21-22 (2d Cir. 1935).

Third, the "new or different function" standard imposes absolutely no objective criteria to be applied to the obviousness inquiry. As a result, that standard is an invitation for the fact-finder to rely, consciously or not, on hindsight. The lack of predictability resulting from this standard would, in many cases, render investment in research and development impractical as businesses and their investors would be left wholly at sea in evaluating whether contemplated research would result in a patentable invention. Thus, research and development may be practical only for vertically integrated manufacturing companies, since they rely less on patents and more on manufacturing capacity and trade secrets to protect their technology. As a result, potential

technological advances may be hidden away from the public as trade secrets or—as these vertically integrated manufacturing companies reduce their research and development funding—not pursued altogether. Moreover, the "new or different function" standard would leave the lay fact-finder at the mercy of deciding between each side's bought-and-paid-for experts, who—not bound to rely solely on objective evidence—would in each and every case arrive at diametrically opposed views as to whether a combination was "new and different." Finally, that standard would undermine, if not destroy, the availability of summary judgment, as courts rarely can decide between competing experts as a matter of law when both opinions are admissible. *See, e.g. Sprint Airlines, Inc. v. Northwest Airlines, Inc.*, 431 F.3d 917, 945 (6th Cir. 2005); *Sipp v. Unumprovident Corp.*, 107 F. App'x 867, 873 (10th Cir. 2004); *Greason v. Kemp*, 891 F.2d 829, 835 (11th Cir. 1990).

In its brief, the United States proposes that the Court abandon the teaching-suggestion-motivation test and apply what it claims is the four-factor non-obviousness analysis articulated in *Graham*. According to the United States, under this standard an invention is patentable only if it "manifests" an "extraordinary level of innovation." U.S. Br. 10. Its brief is devoid of any support for this novel standard, from *Graham* or elsewhere. The United States also suggests that combinations of previously known elements would be non-obvious only when they serve a "new or different function" (as petitioner advocates) or when they present a "synergistic result." U.S. Br. 28. But the "synergistic result" standard suffers the same flaws of vagueness and indeterminacy as the "new or different function" test. Indeed, in a moment of candor the United States admits as much, urging the Court to substitute the Federal Circuit's predictable and objective standard with one relying on a district court's "discerning judgment" in undertaking what it sees as a "highly variable inquiry." U.S. Br. 17.

Moreover, upon close inspection, the United States' position appears inconsistent with 35 U.S.C. § 103(a) and this Court's analysis in *Graham*. For instance, the government argues that:

> The Court should reiterate that the role of the hypothetical person of ordinary skill is critical in the nonobviousness inquiry and that the person is understood to have "an ability to combine and modify prior art references that is consistent with the creativity and problem-solving skills that in fact are characteristic of those having ordinary skill in the art."

U.S. Br. 25 (quoting FED. TRADE COMM'N, TO PROMOTE INNOVATION: THE PROPER BALANCE OF COMPETITION AND PATENT LAW AND POLICY ch. 4, at 15 (2003)). This analysis improperly incorporates a presumption into the statute that does not exist. While it may be "understood" that one of ordinary skill has the "*ability* to combine and modify prior art references," it cannot be presumed that one *would* do so. There must be some evidentiary support in the prior art itself that would motivate one of ordinary skill in the art to make the combination. According to 35 U.S.C. § 103(a), a non-obviousness inquiry requires a careful examination of the prior art to ascertain why "the subject matter as a whole" would have been obvious to one of ordinary skill. This determination should include factual findings and an explanation regarding why one of ordinary skill would have been motivated to combine prior art references in view of their disclosures.

F. The Longevity And Consistent Application Of The Teaching-Suggestion-Motivation Standard Has Resulted In Substantial And Reasonable Reliance.

The patent laws grant temporary monopoly rights to patent holders as a reward for innovation and to encourage the public to invest in ideas that strengthen industry, drive

technological progress, and sustain the overall economy. Consequently, it is crucial for patent-holders and investors to have a clear understanding as to the scope of patent protection. It is therefore essential that all patents be given clear and consistent treatment by the courts. As the Court explained in *Festo Corp. v. Shoketsu Kinzoku Kogyo Kabushiki Co.*, 535 U.S. 722 (2002):

> The monopoly [granted to the patent holder] is a property right; and like any property right, its boundaries should be clear. This clarity is essential to promote progress, because it enables efficient investment in innovation. A patent holder should know what he owns, and the public should know what he does not.

Id. at 730-31. This is particularly true with the non-obviousness requirement. In adopting § 103, Congress sought to achieve "'uniformity and definiteness,'" which would "'have a stabilizing effect and minimize great departures which have appeared in some cases.'" *Graham*, 383 U.S. at 15 (quoting H.R. REP. NO. 82-1923, at 7 (1952)).

Before the Court of Appeals for the Federal Circuit was established, there existed a glaring absence of uniformity and consistency in the adjudication of patent law. The decisions of the various courts of appeals were often conflicting, even as to substantially similar patents, leading patent holders to experience prolonged uncertainty and insecurity with regard to the scope of protection. *See* Commission on Revision of the Fed. Court Appellate Sys., *Recommendations for Change*, 67 F.R.D. 195, 361 (1975) ("Hruska Report").

In 1972, Congress established the Commission on Revision of the Federal Court Appellate System ("Hruska Commission") to study the structure and internal procedures of the federal courts of appeals and recommend changes to Congress. One of the Hruska Commission's findings was that there was a clear need in the area of patent law "for a new

court which could not only deal with the actual conflicts which develop between circuits and within circuits but more importantly . . . could provide a monitoring function to eliminate or at least minimize the attitudinal aberrations with which we are too often now confronted." Hruska Report, *supra*, at 361 (internal quotation marks omitted).

In 1981, Congress established the Federal Circuit. One stated purpose in doing so was "to fill a void in the judicial system by creating an appellate forum capable of exercising nationwide jurisdiction over appeals in areas of the law where Congress determines there is a special need for nationwide uniformity." S. REP. NO. 97-275, at 2 (1981), *reprinted in* 1982 U.S.C.C.A.N. 11, 12. Ultimately, in the patent law context, the goal was to increase doctrinal stability and predictability in order to make planning easier for businesses and industries that rely on the system, to strengthen the national economy, and to advance technological innovation. *See* H.R. REP. NO. 97-312 at 20-23 (1981); S. REP. NO. 97-275, at 6 ("Uniformity in the law will be a significant improvement from the standpoint of the businesses that rely on the patent system. Business planning becomes easier as more stable and predictable patent law is introduced. This can have important positive ramifications upon our economy as a whole."). Congress found that "stability in the patent law [context] has an effect on technological innovation":

> Patents . . . are a stimulus to the innovative process, which includes not only investment in research and development but also a far greater investment in facilities for producing and distributing the goods. Certainly, it is important to those who must make these investment decisions that we decrease unnecessary uncertainties in the patent system.

S. REP. NO. 97-275, at 6 (quoting *Hearings on the Fed. Courts Improvement Act of 1979 Before the Senate Judiciary Subcomm. on Improvements in Judicial Machinery*, 96th

Cong. 67-68 (1979) (statement of Harry F. Manbeck, May 7, 1979)).

Since the Federal Circuit was formed, this Court repeatedly has recognized the importance of the uniformity, certainty, and consistency that the Federal Circuit has brought to the area of patent law. It is for this reason that the Court has determined that the Federal Circuit should exercise *de novo* review in claim construction cases.

> "[T]he limits of a patent must be known for the protection of the patentee, the encouragement of the inventive genius of others and the assurance that the subject of the patent will be dedicated ultimately to the public." Otherwise, a "zone of uncertainty which enterprise and experimentation may enter only at the risk of infringement claims would discourage invention only a little less than unequivocal foreclosure of the field," and "[t]he public [would] be deprived of rights supposed to belong to it, without being clearly told what it is that limits these rights."

Markman v. Westview Instruments, Inc., 517 U.S. 370, 390 (1996) (citations omitted) (brackets in the original).

This concern for those who have acted in reliance on the judiciary's construction of the patent laws has compelled this Court to hesitate to change course in other contexts. For instance, this Court declined to find the doctrine of equivalents in conflict with the Patent Act because of its "lengthy history." *Warner-Jenkinson Co. v. Hilton Davis Chem. Co.*, 520 U.S. 17, 28 (1997). Similarly, the Court declined to alter the doctrine of prosecution history estoppel, explaining that "[t]o change so substantially the rules of the game now could very well subvert the various balances the PTO sought to strike when issuing the numerous patents which have not yet expired and which would be affected by our decision." *Id.* at 32 n.6.

In the unique context of the Federal Circuit, where Congress created a specialized court to develop subject matter expertise and to ensure consistency in a particularly complex area of law, the principles underlying the doctrine of *stare decisis* should apply analogously to this Court's review of the Federal Circuit's teaching-suggestion-motivation standard. Respecting the Federal Circuit's precedent in this circumstance would "promote[] the evenhanded, predictable, and consistent development of legal principles, foster[] reliance on judicial decisions, and contribute[] to the actual and perceived integrity of the judicial process." *United States v. Int'l Bus. Machs. Corp.*, 517 U.S. 843, 856 (1996) (quoting *Payne v. Tennessee*, 501 U.S. 808, 827 (1991)). It would bring fairness and stability to case law through the affirmation of settled legal expectations. *Randall v. Sorrell*, 126 S. Ct. 2479, 2489 (2006). This Court, moreover, consistently has been reticent to disrupt settled expectations. *See id.* at 2490; *Allied Signal, Inc. v. Dir., Div. of Taxation*, 504 U.S. 768, 783 (1992); *Quill Corp. v. North Dakota*, 504 U.S. 298, 311 (1992).

The teaching-suggestion-motivation standard has been applied since the 1940s. *See supra*, at 4-6. Despite many opportunities over the past twenty-five years, this Court has declined to review *any* of the Federal Circuit's obviousness decisions.[8] Patent holders, investors, and businesses all have relied on that standard. And, in the process, the nation's high

---

[8] *See, e.g., Ecolochem, Inc. v. So. Cal. Edison Co.*, 227 F.3d 1361 (Fed. Cir. 2000), *cert. denied*, 532 U.S. 974 (2001); *Langston v. Sw. Bell Tel. Co.*, 945 F.2d 416 (Fed. Cir. 1991) (unpublished), *cert. denied*, 503 U.S. 914 (1992); *Modine Mfg. Co. v. Alien Group, Inc.*, 917 F.2d 538 (Fed. Cir. 1990), *cert. denied*, 500 U.S. 918 (1991); *Polaroid Corp. v. Eastman Kodak Co.*, 789 F.2d 1556 (Fed. Cir.), *cert. denied*, 479 U.S. 850 (1986); *Medtronic, Inc. v. Daig Corp.*, 789 F.2d 903 (Fed. Cir.), *cert. denied*, 479 U.S. 931 (1986); *Nickson Indus., Inc. v. Rol Mfg. Co.*, 765 F.2d 160 (Fed. Cir.) (table disposition), *cert. denied*, 474 U.S. 843 (1985).

technology economy has flourished. To depart from that standard now would undermine expectations and undercut the fairness and stability that its consistent application has brought to the patent laws. The development of stable, predictable law, the encouragement of reliance on judicial decisions, and the contribution to the perceived integrity of the judicial process all require that the Court not disturb the settled teaching-suggesting-motivation test.

II. ABANDONMENT OF THE TEACHING-SUGGESTION-MOTIVATION TEST WOULD UNDERMINE INNOVATION IN THE U.S. ECONOMY AND HARM INNOVATIVE COMPANIES LIKE *AMICI*.

The Constitution establishes that the goal of the patent system is "[t]o promote the progress of science." U.S. CONST. art. I, § 8, cl. 8. The patent system accomplishes this goal by granting inventors a limited period in which they may exclude others from practicing their invention, but the grant is conditioned on the inventors fully disclosing their inventions to the public. *See Bonito Boats, Inc. v. Thunder Craft Boats, Inc.*, 489 U.S. 141, 150-51 (1989) (describing the "federal patent system" as embodying "a carefully crafted bargain"). The patent system thereby "promote[s] the progress of science" via two different, but related, mechanisms. First, inventors are given an incentive to invent via the promise of exclusivity. Second, the accretional nature of scientific progress is furthered via the public disclosure of the inventor's application. *See Aronson v. Quick Point Pencil Co.*, 440 U.S. 257, 262 (1979) (stating that the "purposes of the federal patent system" are that it "seeks to foster and reward invention" and that "it promotes disclosure of inventions, to stimulate further innovation and to permit the public to practice the invention once the patent expires").

The ultimate goal of the system is that it "will have a positive effect on society through the introduction of new products and processes of manufacture into the economy, and

the emanations by way of increased employment and better lives for our citizens." *Kewanee Oil Co. v. Bicron Corp.*, 416 U.S. 470, 480 (1974). Put more simply, the purpose of the patent system is to stimulate innovation. *See* Dan L. Burk & Mark A. Lemley, *Policy Levers in Patent Law*, 89 VA. L. REV. 1575, 1597 (2003) ("To a greater extent than any other area of intellectual property, courts and commentators widely agree that the basic purpose of patent law is utilitarian: We grant patents in order to encourage invention."); Andrew Beckerman-Rodau, *Patent Law—Balancing Profit Maximization and Public Access to Technology*, 4 COLUM. SCI. & TECH. L. REV. 1, 14 (2002) ("The most obvious benefit of patent law is that it promotes investment in research and development to create innovative products.").

Innovation has always been an important aspect of the United States economy, and in today's modern and rapidly evolving economy it is more important than ever. The archetypal modern corporation through much of the 20th century was a large, vertically integrated enterprise with an "extensive managerial hierarchy."[9] Large, vertically integrated corporations, however, often find it difficult to innovate.[10]

---

[9] Timothy J. Sturgeon, *Modular Production Networks: A New American Model of Industrial Organization*, 11 INDUS. & CORP. CHANGE 451, 451 (2002); *see also* Richard N. Langlois, *The Vanishing Hand: The Changing Dynamics of Industrial Capitalism*, 12 INDUS. & CORP. CHANGE 351, 352 (2003) (describing this model of corporate structure as "multi-unit firms in which managerial control spans a large number of vertical stages").

[10] *See* Gary Hamel, *Bringing Silicon Valley Inside*, HARV. BUS. REV., Sept.-Oct. 1999, at 71, 76-78; Daron Acemoglu, *et al.*, *Vertical Integration and Distance to Frontier*, 1 J. EUR. ECON. ASS'N 630, 630 (2003) ("In vertically integrated firms, owners (managers) have to spend time both on production and innovation activities, and this creates managerial overload, and discourages innovation."); STAFF OF JOINT ECONOMIC COMM., ENTREPRENEURS CREATING THE NEW ECONOMY 15,

Recent decades have witnessed the rise of smaller, specialized companies with business models focused more on developing and pursuing specific core areas of competence while outsourcing non-core areas like manufacturing.[11] Such small, specialized companies offer numerous advantages over the traditional vertically integrated firms. They more easily adapt to increasing competition and market volatility. They attract venture capital funding to support a wider variety of higher risk/higher return undertakings. They are more innovative than their larger, vertically integrated counterparts. They bring tremendous benefits to the national economy. And, importantly, they rely disproportionately on a strong, predictable intellectual property system.

Recent research has confirmed the importance of such smaller, specialized companies. A 2003 study comprehensively evaluated over 1,000 U.S. companies that owned at least 15 patents. *See* CHI Research, Inc., *Small Serial Innovators: The Small Firm Contribution to Technical*

19-20 (2000) (prepared by Chris Edwards) (hereinafter "ENTREPRENEURS") (available at http://www.cato.org/research/articles/edwards11-00.pdf).

[11] *See* Council on Competitiveness, *Innovate America: National Innovation Initiative Final Report 18* (2004) (hereinafter "*Innovate America*") ("In this increasingly fluid environment, no one company can hope to achieve and maintain control of an industry or market through vertical integration. Even the largest businesses, governments and academic institutions are more and more interdependent with a large number of smaller enterprises.") (available at http://www.publicforuminstitute.org/nde/sources/NII_Final_Report.pdf); Sturgeon, *supra*, at 456 (noting that in the "product-level electronics manufacturing" market, "the organizational shift, from in-house to outsourced manufacturing, has been dramatic in recent years" and that "comparable changes are underway in many other sectors . . . such as apparel and footwear, toys, data processing, offshore oil drilling, home furnishings and lighting, semiconductor fabrication, food processing, automotive parts, brewing, enterprise networking, and pharmaceutical production").

Change 3 (2003) (hereinafter "*Small Serial Innovators*") (available at http://www.sba.gov/advo/research/rs225tot.pdf). The study concluded that:

- "one-third of America's most prolific patenting companies are small firms."[12] *Id.* at 6.
- "a patent from a small firm is more than twice as likely to be found among the top 1% highest impact patents than is a patent from a large firm." *Id.* at 12.
- "small firms are much more innovative per employee than are the large patenting firms." *Id.*
- "Innovation in small firms is . . . more closely linked to the scientific frontier." *Id.* at 20.

A subsequent study found that the "technologic influence" of such firms is increasing, *see Small Firms and Technology*, *supra*, at ii, with some even focusing *exclusively* on research and development. *See Small Serial Innovators*, *supra*, at 6 (noting that there were "a fair number of research companies with 0 sales" since such "firms exist to develop technology"). This new breed of business has established a new set of working relationships with other organizations. It is less integrated with established enterprises; it is increasingly virtual; and it relies upon networks to collaborate.[13] For technology networks, patents are the medium for exchange.

---

[12] Industries "highly dependent" on such firms include biotechnology, medical electronics, medical equipment, pharmaceuticals, and telecommunications. *See* CHI Research, Inc., *Small Firms and Technology: Acquisitions, Inventor Movement, and Technology Transfer* 14-15 (2004) (hereinafter "*Small Firms and Technology*") (available at http://www.sba.gov/advo/research/rs233tot.pdf).

[13] *See* Susan Hockfield, President, Mass. Inst. of Tech., The University in the U.S. Innovation System, Address to the Bernard L. Schwartz Forum on U.S. Competitiveness in the 21st Century, Brookings Institution (Apr. 28, 2006) (available at http://web.mit.edu/hockfield/speeches/2006-innovation.html); ENTREPRENEURS, *supra*, at 4-5.

A prime example is the semiconductor industry, one of the nation's most strategically important technology sectors. That industry is witnessing a "disaggregation" of its previous vertical integration and an emergence of smaller, networked technology firms.[14] "Many experts say that, over time, nearly all electronics companies . . . will rely upon other[] [specialty companies] for product, design, testing, packaging and other functions," and they will "own only two things, their own IP around their core competency and a channel for selling to their customer."[15]

The three *amici* are representative of these trends. Each was founded as a small, specialty technology company. Each attracted risk capital, with investors banking on management's ability to develop, protect, and market a compelling technology. Each critically relied on the protections afforded by the Patent Act. And each is a participant in the disaggregation of the semiconductor and communications industries—*i.e.*, each *amicus* licenses the technology produced by its research efforts to other companies, which in turn use that technology to manufacture products.

For example, Tessera specializes in miniaturization technologies which enable the semiconductor industry to build smaller, faster, and more reliable electronic products. Tessera's miniaturization technology, which improves a wide range of wireless, computing, gaming, entertainment, medical, and defense-related electronic products, is licensed to over sixty companies—such as Intel, Samsung, Renesas, Toshiba, and Texas Instruments—and a number of

---

[14] *See* REPORT OF THE DEFENSE SCIENCE BOARD TASK FORCE ON HIGH PERFORMANCE MICROCHIP SUPPLY 18-19 (Feb. 2005) (available at http://www.acq.osd.mil/dsb/reports/2005-02-HPMS_Report_Final.pdf).

[15] Karen D. Schwartz, *Can You Spell Disaggregation?* (Feb. 1, 2003) (available http://www.edn.com/article/CA271755.html?ref=nbsa).

universities. In 2006, it will spend millions of dollars on research and development. Based on the technological advances deriving from these efforts, it expects to file numerous new patent applications to add to its over 360 issued United States patents in its portfolio.

Qualcomm is a leading developer and innovator of numerous advanced semiconductor and wireless communications technologies. In 2005, Qualcomm spent over $1 billion on research and development, and is on pace to spend more in 2006. It presently has more than 4,000 United States patents and patent applications. Qualcomm's products are widely used in the manufacture of cellular telephones and other wireless devices, and it has licensed its technology to more than 125 leading telecommunications and consumer electronics equipment manufacturers around the world. Licensing its intellectual property enables its customers to design, manufacture, and sell products based on Qualcomm's industry-leading wireless technology. Qualcomm helped the wireless industry generate more than $150 billion in revenue in 2004 alone.

Finally, AmberWave is a semiconductor technology company focusing on an advanced form of silicon and other specialty materials that enhance the speed and reduces the energy consumption of semiconductor chips. Its technology is the result of more than fifteen years of research at MIT, AT&T Bell Labs, and its self-funded $25 million research facility. AmberWave has raised over $90 million in venture capital investment, spends over $8 million annually in research and development, and has a portfolio of over 150 issued and pending patents. AmberWave focuses its research and development specifically on bridging the gap between world-class research universities and commercial institutions by using intellectual property as a mechanism to do cooperative research, to aggregate technology from a variety of sources, and to transfer technology to its customers.

Amici depend upon strong and predictable intellectual property rights for numerous reasons. In a rapidly changing and disaggregating industry, they depend upon their ability to transfer rights to their technology to the network of other companies. In many cases, the transfer is an essential revenue generator.[16] In other instances, they may cross-license intellectual property with other companies. This cross-licensing of intellectual property rights is sometimes considered an independent form of capital itself. And each is naturally very dependent on investors who, in turn, must determine whether these companies have obtained, or are likely to obtain, intellectual property protection to protect their investment.[17] These companies realize, of course, that not all of their research and development efforts will result in economically valuable technology,[18] but the risk is tolerable because of the ability to profit from the exclusive rights to successful inventions granted by the patent system.[19]

---

[16] *See* Robert Greene Sterne, *et al.*, *The 2005 U.S. Patent Landscape for Electronic Companies*, 823 *PLI/Pat* 293, 320-21 (2005) (the business model of companies like the *amici* is often wholly dependent on those companies being able to monetize their research and development efforts).

[17] *See Small Serial Innovators*, *supra*, at 8 ("venture capitalists need to see patents . . . to confirm the substance of the technology developed by the firm"); Beckerman-Rodau, *supra*, at 22 ("The economic potential provided by patents encourages capital investment both in research and development activities and in the manufacture and marketing of new technology."); Mark A. Lemley, *Reconceiving Patents in the Age of Venture Capital*, 4 J. SMALL EMERGING BUS. L. 137, 143-44 (2000) (noting a study showing "a strong positive relationship between venture capital financing and patenting").

[18] *See Innovate America*, *supra*, at 33 ("On average, only one in ten patents is ever commercialized."); *Small Serial Innovators*, *supra*, at 11 ("A patent represents a contribution to technical advance of unknown magnitude" and "a vast number [of patents] are almost worthless").

[19] *See* Beckerman-Rodau, *supra*, at 21 ("Many of the patents that result from research and development activities have little economic value.

Of course, whether or not *amici* and companies like them return a profit for their investors, their focus on research and development as a core competency furthers the constitutional objective of advancing the progress of science, serves the ultimate end of the patent system through the public disclosures of their inventions,[20] and is vital to the United States' economy in the 21st century.

For *amici*, rejecting the predictability of the current teaching-suggestion-motivation test in favor of the non-obviousness tests proposed by petitioner and the United States would undermine the very assumptions upon which these companies operate. Those subjective standards would invite the Patent and Trademark Office and the lower courts to engage in hindsight reconstruction. All technology companies would suffer as a result of the re-introduction of hindsight into the obviousness inquiry and the application of a subjective obviousness standard because of the increased risk that they would invest significant amounts in research that would be unprotected by any intellectual property rights.

The bottom line is that the standards proposed by petitioner and the United States would make patentability more unpredictable than under the current standard. The issuance of patents under the teaching-suggestion-motivation test is

---

Nevertheless, it is the potential for economic gain that drives development of innovation that is subsequently protected by patent law.").

[20] "The fact that much patented technology lacks economic viability at the time of patenting does not diminish the substantial public benefit of such technology. Such information is widely available to the public via the public disclosure aspect of patent law. This increases the public storehouse of information which is beneficial to society. Knowledge and information of all types are the raw materials of research and innovation. Therefore, the more information that is available the more likely it will be used by others to develop additional innovations; and, the more innovations that are developed the more likely at least some of these will be highly useful to society." Beckerman-Rodau, *supra*, at 21.

predictable; that standard protects against hindsight reconstruction; and it results in stronger patents that are more difficult to invalidate. Investors who rely on both the predictability of the current patent system and the strength of the issued patents may well be discouraged from financing research if this standard were disturbed. Innovative companies would pay the price since investing in those companies would become more speculative. Such companies would be forced to curtail their innovative research due to financial constraints. The net result would be a reduction in research and development efforts, a reduction in patent applications flowing from such efforts, a reduction in patents granted, a reduction in the dissemination of information, and a reduction in overall innovation—all occurring to the detriment of the public and the nation's economy and all contrary to the promotion of scientific progress.

CONCLUSION

The judgment of the United States Court of Appeals for the Federal Circuit should be affirmed.

Respectfully submitted,

ADAM H. CHARNES
Counsel of Record
STEVEN GARDNER
FRANK W. LEAK, JR.
JON R. PIERCE
BRADLEY A. ROEHRENBECK
KILPATRICK STOCKTON LLP
1001 West Fourth Street
Winston-Salem, NC 27101
(336) 607-7300

Counsel for Amici Curiae

847 C

(34)

No. 04-1350

FILED
OCT 16 2006
OFFICE OF THE CLERK
SUPREME COURT, U.S.

IN THE

Supreme Court of the United States

KSR International Co.,

Petitioner,

v.

Teleflex, Inc. et al.,

Respondents.

On Writ of Certiorari
to the United States Court of Appeals
for the Federal Circuit

BRIEF OF THE UNITED INVENTORS ASSOCIATION AS AMICUS CURIAE IN SUPPORT OF THE RESPONDENTS

Robert F. Redmond, Jr.
Counsel of Record
William R. Poynter
Williams Mullen
1021 East Cary Street
Richmond, Virginia 23219
(804) 783-6439

October 16, 2006

Table of Contents

Page

Table of Contents i
Table of Authorities ii
Interest of Amicus Curiae 1
Introduction 3
Summary of the Argument 6
Argument 9
A. The District Court Did Not Provide Adequate Procedural Protection to the Patent, Holder, Teleflex 9
B. The Federal Circuit Has Refined the *Graham* Test Through "Case-By-Case Development 12
C. *Daubert* And Its Progeny Illustrate How District Courts Can Resolve the Predicate Factual Issues Identified in *Graham* 17
Conclusion 20

TABLE OF AUTHORITIES

Cases

United States Supreme Court

Daubert v. Merrell Dow Pharmaceuticals, Inc.,
590 U.S. 579 (1993) 9, 17, 18, 19, 20, 21

Dickinson v. Zurko,
527 U.S. 150 (2000) 15

Graham v. John Deere Co.,
383 U.S. 1 (1966) ..... passim

Kumho Tire Co. v. Carmichael,
526 U.S. 137 (1999) 18

Radio Corp. of Am. v. Radio Eng'g Labs., Inc.,
293 U.S. 1 (1934) 9, 14

United States Courts of Appeals

Goebel v. Denver & Rio Grande W. R.R. Co.,
215 F.3d 1083 (10th Cir. 2000) 18, 19, 20

Hynes v. Energy West, Inc.,
211 F.3d 1193 (10th Cir. 2000) 18

In re Fulton,
391 F.3d 1195 (Fed. Cir. 2004) 13

In re Jones,
958 F.2d 347 (Fed. Cir. 1992) 13

In re Kahn,
441 F.3d 977 (Fed. Cir. 2006)..... 13, 14

In re Rouffet,
149 F.3d 1350 (Fed.Cir.1998)..... 15

Maryland Cas. Co. v. Therm-O-Disc, Inc.,
137 F.3d 780 (4th Cir. 1998)..... 19

McClain v. Metabolife Int'l, Inc.,
401 F.3d 1233 (11th Cir. 2005)..... 19

Merck & Co., Inc. v. Biocraft Labs., Inc.,
874 F.2d 804 (Fed. Cir. 1989)..... 13

Moba, B. V. v. Diamond Automation, Inc.,
325 F.3d 1306 (Fed. Cir. 2003)..... 9, 14

Motorola, Inc. v. Interdigital Tech. Corp.,
121 F.3d 1461 (Fed. Cir. 1997)..... 13

United States v. Decoud,
456 F.3d 996 (9th Cir. 2006)..... 18

United States v. Lee,
25 F.3d 997 (11th Cir. 1994)..... 19

W.L. Gore & Assocs., Inc. v. Garlock, Inc.,
721 F.2d 1540 (Fed. Cir. 1983)..... 16

United States District Courts

Teleflex, Inc. v. KSR Int'l Co.,
298 F. Supp. 2d 581 (E.D. Mich. 2003)..... passim

Statutes and Rules

Federal Rules of Evidence 104(a) 17, 18

Federal Rules of Evidence 702 ..... 18, 19

26 U.S.C. § 501(c)(3) 1

35 U.S.C. § 103(a) ..... passim

35 U.S.C. § 282 ..... 9, 14

Treatises and Publications

Advisory Committee Notes to FED. R. EVID. 104(a) (1972) 17

NATIONAL SCIENCE FOUNDATION, SCIENCE AND ENGINEERING INDICATORS 2006 6-8 (Feb. 2006) 3, 15

PAT CHOATE, HOT PROPERTY: THE STEALING OF IDEAS IN AN AGE OF GLOBALIZATION 12 (Alfred A. Knopf 2005) 6

Report of Defendant's Expert Witness Richard D. Grauer ("Grauer Report") 2003 WL 24219933 ..... 11, 16

ROBERT J. SHAPIRO & KEVIN A. HASSETT, THE ECONOMIC VALUE OF INTELLECTUAL PROPERTY 27 (Oct. 2005) 3

STEPHEN E. SIWEK, ENGINES OF GROWTH: ECONOMIC CONTRIBUTIONS OF THE US INTELLECTUAL PROPERTY INDUSTRIES, ECONOMISTS INC. (2005) ... 4

THOMAS L. FRIEDMAN, THE WORLD IS FLAT: A BRIEF HISTORY OF THE TWENTY-FIRST CENTURY 246 (Farrar, Straus & Giroux 2005) 3

UNITED STATES PATENT & TRADEMARK OFFICE, DRAFT STRATEGIC PLAN 2007-2012 *Available at* http://www.uspto.gov/web/offices/com/strat2007 .. 5

Interest of the *Amicus Curiae*[1]

This brief is filed on behalf of the United Inventors Association ("UIA"), in support of Respondents Teleflex Inc. and Technology Holding Company ("Teleflex"). The UIA is a non-profit educational institution, as defined by the Code of the Internal Revenue Service, 26 U.S.C. § 501(c)(3). As the world's leading inventor organization, the UIA reaches more than 10,000 individual inventors and entrepreneurs, small business enterprise and service providers, and a massive network of regional organizations unified with a single goal: inventor and entrepreneur education. The UIA is thus well positioned to demonstrate the flaws in the Petitioner's approach and to explain why the Federal Circuit's approach is necessary to the proper functioning of the patent system.

The UIA urges this Court to apply the obviousness test developed by the Federal Circuit to prevent the statutorily proscribed, dangerous effects of hindsight in evaluating patent validity. It would be difficult, if not impossible, to name a single corporation that could not be traced back to only a single inventor or entrepreneur, or perhaps a handful of inspired innovators gathered in a garage or basement. Apart from perseverance, the best hope for typical inventors and entrepreneurs is sound and reliable patent protection.

---

[1] This brief of amicus curiae is presented by the United Inventors Association pursuant to Rule 37.3(b) of the Rules of the Supreme Court of the United States. Pursuant to Rule 37.6 of the Rules of the Supreme Court of the United States, the UIA states that no counsel for a party authored this brief, in whole or in part, and that no person or entity other than UIA has made a monetary contribution to the preparation or submission of this brief. Counsel for the UIA prepared this brief on a *pro bono* basis. This brief is filed with the consent of both parties, and their consent letters are on file with the Clerk's Office.

The UIA's primary concern is that the position of Petitioner could result in existing patents readily being challenged by adversaries armed with hindsight. Existing patents that have been hard earned could well be subject to *post-facto* judgment on a basis that ignores the very qualities of vision and thoughtful inquiry which are always at the heart of any genuine innovation. While large business may be only slightly impacted; small business concerns and struggling innovators are certain to face an instant and devastating diminishment of corporate value. It is this grave danger to this country's inventor and entrepreneur community that the UIA wishes to address.

Introduction

The implications of this case reach far beyond the parties currently before the Court. This case, indeed any intellectual property case before the Court, implicates the United States' status in this increasingly globalized world. In today's "flat world" economy, as coined by Thomas Friedman in his book, the only area in which the United States is competitive is in technology, knowledge, and intellectual property. In a "flat world," there is a great incentive to develop a new product or process because it can achieve world-wide scale virtually instantly. THOMAS L. FRIEDMAN, THE WORLD IS FLAT: A BRIEF HISTORY OF THE TWENTY-FIRST CENTURY 246 (Farrar, Straus & Giroux 2005).

It is common knowledge that no country respects and protects intellectual property better than the United States; as a result, the United States attracts inventors and innovators from around the world to come here to work and lodge their intellectual property. The quality of American intellectual property protection enhances and encourages people and firms to develop technological innovations. The new ideas that emerge from research and development enable affluent nations like the United State to successfully compete in the global marketplace. NATIONAL SCIENCE FOUNDATION, SCIENCE AND ENGINEERING INDICATORS 2006 6-8 (Feb. 2006). Shapiro and Hassett's economic research concluded that economically-powerful forms of intellectual property, embodied in innovations, are the largest single factor driving economic growth and development, and that intellectual property protections are critical for the development and diffusion of those innovations. ROBERT J. SHAPIRO & KEVIN A. HASSETT, THE ECONOMIC VALUE OF INTELLECTUAL PROPERTY 27 (Oct. 2005).

The importance of intellectual property protection to the American economy simply cannot be overstated. U.S. intellectual property today is worth between $5 trillion and $5.5 trillion; equivalent to about forty-five percent of U.S. Gross Domestic Product ("GDP") and greater than the GDP of any other nation in the world. *Id.* at 18. United States intellectual property industries ("IP Industries") contribute "nearly 40% of the growth achieved by all U.S. private industry and nearly 60% of the growth of U.S. exportable products and services." STEPHEN E. SIWEK, ENGINES OF GROWTH: ECONOMIC CONTRIBUTIONS OF THE US INTELLECTUAL PROPERTY INDUSTRIES, ECONOMISTS INC. (2005) (commissioned by NBC Universal). In addition, "GDP 10-year growth estimates would be approximately 30% lower than current predictions without the contributions of these [IP] industries." *Id.* US IP industries employ eighteen million workers who earn on average forty percent more than all American workers. *Id.*

The United States has traditionally maintained a large surplus when trading intellectual property, and it continues to be a net exporter of manufacturing technological know-how sold as intellectual property. Royalties and fees from foreign firms were, on average, three times greater than those paid out to foreigners by United States firms for access to their technology. In 2003, United States receipts from the licensing of technological know-how to foreigners totaled $4.9 billion, 24.4% higher than in 1999. The most recent data show a trade surplus of $2.6 billion in 2003, 28% higher than the prior year but still lower than the $3.0 billion surplus recorded in 2000. In 2003, US trade in intellectual property produced a surplus of $28.2 billion, up about 5% from the $25.0 billion surplus recorded in 2002, and about 75% of transactions involved exchanges of intellectual property between United States firms and their foreign affiliates. NATIONAL SCIENCE FOUNDATION, *supra*, at 6-23.

These trends suggest both a growing internationalization of US business and a growing reliance on intellectual property developed overseas. In order to maintain this surplus, and to continue to promote the export of American technology, it is essential that American innovations receive strong intellectual property protection.

The USPTO itself supports efforts and initiatives to strengthening intellectual property protection and curb theft of intellectual property. One of its stated strategies is to "[i]ncrease our presence and activities domestically and internationally to advocate U.S. Government IP policy so that U.S. businesses and innovators can better secure and enforce their IP rights." UNITED STATES PATENT & TRADEMARK OFFICE, DRAFT STRATEGIC PLAN 2007-2012, *available at* http://www.uspto.gov/web/offices/com/strat2007.

The major barrier to increasing exportation of American innovation through licensing is the theft of American intellectual property. Shapiro and Hassett rightly recognize the grave danger posed by rampant piracy of intellectual property worldwide, including counterfeiting and other violations of intellectual property rights. The Organization for Economic Development conservatively estimates that the total costs of counterfeiting are equivalent to 5 percent to 7 percent of world trade. The United States, as the world's largest economy with the greatest levels of patenting and copyright activity, is especially harmed by counterfeiting: based on United States good exports of more than $807 billion in 2004, and the OECD's 7 percent estimate of direct costs, counterfeiting alone cost the American economy more than $56 billion in 2004. SHAPIRO & HASSETT, *supra*, at 19-20.

The Federal Bureau of Investigation reports that US companies lose $200 billion to $250 billion annually due to worldwide copyright, trademark, and trade secret infringement. The European Commission concludes that five to seven percent of world trade is composed of counterfeit goods, and reports that the value of counterfeiting as a percentage of world trade is growing: between 1990 and 1999 it doubled from 3.5 percent to seven percent. This growth rate reflects the rapid globalization of the world's economy and a corresponding lack of anti-counterfeiting protections. PAT CHOATE, HOT PROPERTY: THE STEALING OF IDEAS IN AN AGE OF GLOBALIZATION 12 (Alfred A. Knopf 2005).

Accordingly, any review of the United States' patent laws must occur against the backdrop of the increasing importance of the United States' intellectual property laws to American businesses. Strong intellectual property protection is essential for American firms to continue to thrive in today's "flat world."

Summary of the Argument

If Petitioner had moved for summary judgment that Teleflex's pedal assembly was defectively designed and unreasonably dangerous and if Petitioner had supported its motion with two conclusory expert affidavits and if the district court had granted summary judgment without a hearing and without, even, oral argument, then an appellate court would not hesitate to reverse the district court and remand the case for further proceedings.

Here, however, Teleflex has sustained a greater defeat. Its product has not been found defectively designed and unreasonably dangerous, but rather, its intellectual property rights to a commercially successful product have

been stripped without a hearing. Instead of having to pay a personal injury judgment to an injured plaintiff, Telelex must cede its property rights to its Canadian competitor.

The district court's invalidation of Teleflex's patent without a hearing or oral argument is even more troubling in light of the district court's recognition that Teleflex's patent is presumed valid and that Petitioner "bears the burden of proving facts that establish invalidity by clear and convincing evidence." *Teleflex, Inc. v. KSR Int'l Co.*, 298 F. Supp. 2d 581, 587 (E.D. Mich. 2003).

One of the prerequisites for patentability is that the claimed invention is nonobvious within the framework of 35 U.S.C. section 103(a). The Court established a test for "nonobviousness" under section 103(a) in *Graham v. John Deere Co.* 383 U.S. 1 (1966).

The test involves "several basic factual inquiries" that establish (or refute) nonobviousness. This Court recognized forty years ago that there may "be difficulties in applying the nonobviousness test" but also recognized that the test would refine and mature over the years through "case-by-case development." *Id.* at 18.

The Court of Appeals for the Federal Circuit has refined the *Graham* test over the years through "case-by-case development." To avoid statutorily-proscribed "hindsight bias" the Federal Circuit has held that a party challenging a patent under section 103(a) cannot simply cobble together prior art from previous years or decades and claim that the patented invention was an obvious extension of prior art. The Federal Circuit requires the party challenging the patent to demonstrate a motivation to combine the various prior art into the new invention.

The Federal Circuit's "motivation-to-combine" test balances the concern that obvious extensions of prior art are not subject to a patent monopoly against the concern of patent holders that their intellectual property rights will not be invalidated by a cobbling together of prior art references. This careful balancing of interests is particularly important in today's "flat world" economy where intellectual property is precious and easily pirated.

Like many judicial tests, the Federal Circuit's "motivation-to-combine" test demands some intellectual rigor in its application. However, the "motivation-to-combine" test is not inflexible and it definitely does not mandate, as some have claimed, that the "motivation-to-combine" be found, expressly, in the prior art references.

The Federal Circuit's requirement that a party articulate--in the prior art, in the general industry knowledge or through evidence of the knowledge of a person having ordinary skill in the art--the "motivation-to-combine" is a reasonable protection for patent holders. This is particularly so because patents are presumed valid and because "obviousness" must be proven by clear and convincing evidence.

This case illustrates why this Court should require some level of intellectual rigor on the part of a party challenging a patent under section 103(a).

This Court should extend at least as much protection to a patent holder as it does to a product liability defendant. The concerns articulated by the United States and the *amici* are, at bottom, procedural concerns. Those concerns are best addressed by the existing procedures this Court has in place. A helpful analogy to the judicial determination of obviousness is the judicial determination of expert witness

reliability found in *Daubert v. Merrell Dow Pharmaceuticals, Inc.*, 590 U.S. 579 (1993).

If this Court extends the procedural protections found in *Daubert* and its prodigy to the obviousness test under *Graham v. John Deere Co.*, then the Court will have struck a fair balance between the concerns about lax patentability standards and the concerns of valid patent holders.

Argument

A. The District Court Did Not Provide Adequate Procedural Protection to the Patent Holder, Teleflex.

Teleflex's patent is presumed valid. 35 U.S.C. § 282. A party challenging Teleflex's patent must establish invalidity by clear and convincing evidence. *See Radio Corp. of Am. v. Radio Eng'g Labs., Inc.*, 293 U.S. 1 (1934); *Moba, B. V. v. Diamond Automation, Inc.*, 325 F3d 1306, 1319 (Fed. Cir. 2003).

The ultimate question of patent validity is a question of law. *Graham*, 383 U.S. at 17. Of the three prerequisites for patentability,[2] however, nonobviousness lends itself to a predicate factual inquiry before the Court determines nonobviousness as a matter of law. *Id.*

This Court identified the elements of the predicate factual inquiry to be undertaken by a district court:

1. the scope and content of the prior art are to be determined;
2. differences between the prior art and the claims at issue are to be ascertained; and

---

[2] Novelty, 35 U.S.C. section 101; utility, 35 U.S.C. section 102, and nonobviousness, 35 U.S.C. section 103.

3. the level of ordinary skill in the pertinent art must be resolved.

Id.

The Court also identified a non-exhaustive list of "secondary considerations" that are relevant indicia of obviousness or nonobviousness:

(a) commercial success,
(b) long felt but unsolved needs,
(c) failure of others, etc.

Id. at 18-19.

This Court expressly recognized that its predicate factual inquiries "focus attention on economic and motivational rather than technical issues" but held that these economic and motivational inquiries were a necessary safeguard for patent holders: "They may also serve to guard against *slipping into use of hindsight* and to resist the *temptation to read into the prior art the teachings of the invention in issue*." Id. at 36 (emphasis added) (internal citations omitted).

Finally, this Court cautioned that "*strict observance* of the requirements laid down here will result in that uniformity and definiteness which Congress called for." *Id.* at 18. (emphasis added).

In contrast to the "strict observance of the requirements laid down" in *Graham*, the district court here invalidated Teleflex's patent under section 103(a) without a hearing and without oral argument. *See Teleflex*, 298 F. Supp. 2d at 583, 591, 596.

The district court invalidated Teleflex's patent based on a three-link chain of reasoning:

(a) the Patent Examiner originally rejected Teleflex's patent application based on a

finding of obviousness in the combination of the Redding (U. S. Patent No. 5,460,061) and Smith (U. S. Patent No. 5,063,811) patents;

Id. at 594-95;

(b) the Asano patent (U. S. Patent No. 5,010,782) was never cited to the Examiner as prior art; and

Id. at 589;

(c) "If the Asano patent had been cited to the Examiner, he would have found the combination of Asano and Smith to be obvious just as he found the combination of Redding and Smith to be obvious."

Id. at 595.

What is troubling is that the sole evidentiary basis for the first and third links in this chain is one conclusory affidavit from Petitioner's expert – a patent lawyer named Grauer. *See* Report of Defendant's Expert Witness Richard D. Grauer ("Grauer Report"), 2003 WL 24219933. In fact, the district court's opinion is a near verbatim recitation of Attorney Grauer's affidavit: *Compare Teleflex*, 298 F. Supp. at 595: "If the Asano patent had been cited to the Examiner, he would have found the combination of Asano and Smith to be obvious just as he found the combination of Redding and Smith to be obvious," *with* 2003 WL 24219933, § E: "It would have been obvious to combine the previously applied electronic throttle control of Smith with the adjustable-position pedal system of Asano."

Even more troubling, Grauer supports his opinion (and by extension, the district court's ruling) based on *his personal translation* of the admittedly "garbled" office action rejecting the application based obviousness: "the

Examiner's first sentence was somewhat garbled. Based upon my experience as an examiner and practitioner, it is my opinion that the Examiner's intended meaning was . . . " *See id.* at n.3.

Naturally, as the district court held neither a hearing nor oral argument, Teleflex could not test the bases for Petitioner's expert's opinion in the crucible of cross examination; the district court had no opportunity to assess the credibility or demeanor of the expert and the appellate courts have been denied the opportunity to review a thorough record.

Instead, Teleflex was stripped of its patent based on a paper record and this Court is now asked to resolve a matter of global import based on cross-moving affidavits. This Court can and should demand more of a record. Further, this Court should sustain the Federal Circuit's insistence on a more adequate record by affirming.

B. The Federal Circuit Has Refined the *Graham* Test Through "Case-By-Case Development."

In creating the fact-based *Graham* test, this Court expressly recognized that there may "be difficulties in applying the nonobviousness test." *Graham*, 383 U.S. at 18. This Court foresaw a multitude of varying factual scenarios: "What is obvious is not a question upon which there is likely to be uniformity of thought in every given factual context." *Id.* The Court was confident, however, that its fact-based obviousness test "should be amenable to a case-by-case development." *Id.*

The Court of Appeals for Federal Circuit has developed the *Graham* test through "case-by-case development" over the past decades.

To avoid statutorily proscribed "hindsight bias", the Federal Circuit has held that a party challenging a patent under section 103(a) cannot simply cobble together prior art from previous years or decades and claim that the patented invention was an obvious extension of prior art: "Mere identification in the prior art of each element is insufficient to defeat the patentability of the combined subject matter as a whole." *In re Kahn*, 441 F.3d 977, 986 (Fed. Cir. 2006).

To prevent hindsight bias and protect the rights of patent holders, the Federal Circuit requires a party challenging a patent to demonstrate a motivation to combine the various prior art into the new invention. *See in re Fulton*, 391 F.3d 1195, 1199-1200 (Fed. Cir. 2004). The "motivation to combine" can come from many sources including

- knowledge generally available to one of ordinary skill in the art;

In re Jones, 958 F.2d 347, 351 (Fed. Cir. 1992);

- the prior art;

Merck & Co., Inc. v. Biocraft Labs., Inc., 874 F.2d 804, 807 (Fed. Cir. 1989);

- the prior art as filtered through the knowledge of one skilled in the art.

Motorola, Inc. v. Interdigital Tech. Corp., 121 F.3d 1461, 1472 (Fed. Cir. 1997).

The Federal Circuit has long held that "There is no requirement that the prior art contain an express suggestion to combine known elements to achieve the claimed invention." *Id.*

The Federal Circuit does insist, however, that a finding of obviousness under section 103(a) be supported by articulable evidence that is either explicit or implicit. See *id.*. ("The record evidence supports the jury's implicit

finding of a suggestion to combine the various references.); *see also Kahn*, 441 F.3d at 988 ("There must be some articulated reasoning with some rational underpinning to support the legal conclusion of obviousness.").

The Federal Circuit's requirement that a party articulate--in prior art; in the general industry knowledge or through evidence of the knowledge of a person having ordinary skill in the art – a "motivation to combine" is a reasonable protection for patent holders that is based as much on due process as it is on section 103. *Id.* This is particularly so because patents are presumed valid and because "obviousness" must be proven by clear and convincing evidence. 35 U.S.C. § 282; *Moba*, 325 F.3d at 1319; *see also Radio Corp.*, 293 U.S. at 7 ("A patent regularly issued...is presumed to be valid until the presumption be overcome by convincing evidence of error.").

In sum, the Federal Circuit heeded this Court's advice to refine the *Graham* test through "case-by-case development". *Graham*, 383 U.S. at 18. The Federal Circuit also heeded this Court's admonition concerning the need for intellectual rigor in applying the test:

> We believe that *strict observance of the requirements laid down here will result in that uniformity and definiteness which Congress called for in the 1952 Act.*

Id. (emphasis added).

Current criticisms of the suggestion test are unfounded. Indeed, the Petitioner's "syngergistic" approach to the obviousness inquiry is wholly subjective and would invite hindsight to rule the day, in violation of both the statute and the Court's jurisprudence. Similarly, the United

States' "extraordinary level of innovation" test is wholly subjective and would permit patent challengers to defeat valid patents by cobbling together old prior art to show that a claimed invention may be novel and useful but not "extraordinarily" so. Both alternate tests seek something other than "nonobviousnesss" as required under section 103(a). That being the case, the Petitioner and the supporting amici should take their case to Congress and not this Court.

This Court is bound to apply section 103(a) as drafted by the United States Congress and it has done so in *Graham*. The *Graham* test works. It has been refined by the Federal Circuit, as this Court has instructed, through "case by case development".[3]

The number of US patents granted has grown steadily since the late 1980s, from approximately 90,000 patents granted in 1990 to approximately 170,000 patents granted in 2003. *Science and Engineering Indicators 2006* at 6-28, Fig. 6-22. In fact, US patents have enjoyed a period of nearly uninterrupted growth since the late 1980s. Most if not all inventions arise from a combination of old elements, and it is more and more common for every element of a claimed invention to be found in the prior art. *Kotzab*, 217 F.3d at 1369-70 (citing *In re Rouffet*, 149 F.3d 1350, 1357 (Fed.Cir.1998)).

---

[3] To the extent that the United States Patent and Trademark Office deems the Federal Circuit's precedent too lax, this Court can clarify that the Patent and Trademark's findings of fact constitute "substantial evidence" of obviousness or nonobviousness. *See Dickinson v. Zurko*, 527 U.S. 150, 164 (2000). As noted above, the Federal Circuit does not require that the "motivation-to-combine" be found expressly in prior art. As such, the Patent and Trademark Office's expertise, noted in the file, can provide substantial evidence of obviousness or nonobviousness.

In such cases, the dangers of hindsight are virtually unavoidable, without an additional consideration to inform the obviousness analysis, especially in cases "where the very ease with which the invention can be understood may prompt one 'to fall victim to the insidious effect of a hindsight syndrome wherein that which only the invention taught is used against its teacher.'" *Dembiczak*, 175 F.3d at 999 (quoting *W.L. Gore & Assocs., Inc. v. Garlock, Inc.*, 721 F.2d 1540, 1553 (Fed. Cir. 1983)).

This case demonstrates why the Federal Circuit's "motivation-to-combine" test is an important procedural safeguard. Here, the district court invalidated Teleflex's commercially successful patent at the behest of Teleflex's Canadian competitor. It did so without a hearing and without oral argument. The district court invalidated Teleflex's "patent regularly issued" based on one affidavit of a patent lawyer retained by Petitioner. Moreover, Petitioner's patent law expert purported to interpret the admittedly "garbled" initial rejection by the Patent Examiner. *See* Grauer Report, 2003 WL 24219933, at n.3. Finally the district court relied upon Grauer's interpretation of the "garbled" initial rejection when it invalidated Teleflex's patent. *See Teleflex*, 298 F. Supp. at 595.

As a holder of valid patent, Teleflex deserved a more thorough hearing before the district court invalidated its patent. Fortunately, as this Court predicted long ago[4], the field of tort law provides a helpful illustration of what process is due under section 103(a).

---

[4] This Court marked other fields of the law as guideposts for the then-nascent obviousness inquiry in *Graham*: "The difficulties [in applying the fact-based *Graham* test] however, are comparable to those encountered daily by courts in such frames of reference as negligence and scienter." *Graham*, 383 U.S. at 18.

C. *Daubert* and Its Progeny Illustrate How District Courts Can Resolve The Predicate Factual Issues Identified in *Graham*.

The question of patent validity is a question of law but patent invalidity based on obviousness requires a predicate factual analysis. *See Graham* 383 U.S. at 17-18. Similarly, admissibility is a question of law for the court but requires a predicate factual analysis before a court can rule on an objection to admissibility. *See* FED. RULE OF EVIDENCE 104(a). The Federal Rule of Evidence Advisory Committee Notes reflect that courts will necessarily make predicate factual findings to determine matters of law:

> Often, however, rulings on evidence call for an evaluation in terms of legally set standard. Thus, when a hearsay statement is offered as a declaration against interest, a decision must be made whether it possesses the required against-interest characteristics. These decisions, too, are made by judges.

Advisory Committee Notes to FED. R. EVID. 104(a) (1972).

This Court has recognized that the relevancy of expert witness testimony is a matter of law that requires predicate factual findings. *Daubert*, 509 U.S. at 592-95.

> Faced with a proffer of expert scientific testimony, then, the trial court must determine, at the outset, pursuant to Rule 104(a) whether the expert is proposing to testify to (1) scientific knowledge that (2) will assist the trier of fact to understand or determine a fact in issue. *This entails a preliminary assessment of whether the*

> *reasoning or methodology properly can be applied to the facts in issue.*

Id. at 592 (emphasis added).

In *Daubert*, the Court laid out a thorough but flexible methodology for evaluating expert witness testimony under Federal Rules of Evidence 104(a) and 702. *See id.* at 593-95. The Court recognized that the trial court's factual findings and conclusions could lead to the exclusion of some evidence – the "gatekeeping role.. *Id.* at 597. However, this Court concluded that the "gatekeeping role" strikes a fair balance between novel scientific theory and "the particularized resolution of legal disputes". *Id.*

In subsequent opinions, this Court held that the trial court had latitude in the manner in which it executed its *Daubert* "gatekeeping" role. *Kumho Tire Co. v. Carmichael*, 526 U.S. 137, 151-52 (1999). The Court requires, however, that the district court properly perform its gatekeeping function when a party raises an objection to expert witness testimony. *See id.* at 159 (Scalia, J. concurring).

Over the years, Courts of Appeal have applied and refined this Court's *Daubert* analysis. The Courts of Appeal strongly encourage district courts to hold *Daubert* hearings with live testimony by the experts subjected to cross-examination by the court and counsel: "The most common method for fulfilling this function [the gatekeeping function] is a *Daubert* hearing, although such a process is not specifically mandated." *Goebel v. Denver & Rio Grande W. R.R. Co.*, 215 F.3d 1083, 1087 (10th Cir. 2000). A *Daubert* hearing is a separate evidentiary hearing involving the examination of witness and findings of fact by the trial court. *See, e.g., Hynes v. Energy West, Inc.*, 211 F.3d 1193, 1204 (10th Cir. 2000); *United States v. Decoud*, 456 F.3d 996,

1013 (9th Cir. 2006); *McClain v. Metabolife Int'l, Inc.*, 401 F.3d 1233, 1237 (11th Cir. 2005); *Maryland Cas. Co. v. Therm-O-Disc, Inc.*, 137 F.3d 780, 782 (4th Cir. 1998).

Whether or not a trial court holds a *Daubert* hearing, it must develop a full record to allow the Court of Appeals to determine if it properly applied the relevant law:

> For purposes of appellate review, a natural requirement of this function is the creation of a sufficiently developed record in order to allow a determination of whether the district court properly applied the relevant law.

Goebel, 215 F.3d at 1088; *see also United States v. Lee*, 25 F.3d 997, 999 (11th Cir. 1994) ("We encourage district courts to make specific fact findings concerning their application of Rule 702 and *Daubert* . . . such findings will facilitate this court's appellate review.").

Daubert hearings and detailed findings of fact allow an appellate court to determine whether the district court misapplied *Daubert*. *See McClain*, 401 F.3d at 1238 (holding that the trial court abdicated its gatekeeping rule based on complexity of issues). A district court's failure to articulate its gatekeeping analysis on the record requires a remand for further proceedings:

> A review of this case convinces us of the absolute necessity of district court findings on the record. There is not a single explicit statement on the record to indicate that the district court ever conducted any form of *Daubert* analysis whatsoever . . . .

Goebel, 215 F.3d at 1088.

The district court's *Graham* analysis in this case is as flawed as the *Daubert* analysis in *Goebel*. In both cases, the district court provided little evidence that it applied, with intellectual rigor, the test laid out by this Court. In this case the district court engaged in a perfunctory recitation of the *Graham* test as refined by the Federal Circuit but it took no evidence, heard no witnesses and held no hearing. *Compare Teleflex*, 298 F. Supp. 2d at 583, 591, 596 *with Goebel*, 215 F.3d at 1086.

The fact that patents are presumed valid and can only be invalidated by clear and convincing evidence only underscores the need for a thorough hearing for section 103(a) challenges complete with live expert testimony and specific findings of fact by the trial court. This Court should affirm the Federal Circuit and remand this case for further, more thorough proceedings in the District Court.

Conclusion

Millions of patents have been issued over the years. The body of "prior art" expands geometrically. The potential for "hindsight bias" also increases geometrically.

If this Court weakens its *Graham* test as refined by the Federal Circuit and eliminates or dilutes the "motivation to combine" test, then the intellectual property rights of thousands of patent holders will also be weakened. The Petitioner's "synergistic" test is wholly subjective and effectively deletes § 103(a) from the statute. The United States' "extraordinary level of innovation" is equally subjective. Under either proposed test, a party bent on pirating intellectual property rights need only cobble together enough "prior art" to establish a prima facie case for obviousness. The Federal Circuit "motivation to combine"

test is a barrier to such schemes because it requires a patent challenger to demonstrate that the new invention is not "obvious" in hindsight only. The UIA joins with the Respondents and numerous *amici* in urging the preservation of the *Graham* test as refined by the Federal Circuit. In today's "flat world" economy the intellectual property of American companies like Teleflex is precious and easily pirated. This Court should not now weaken the protections for intellectual property that are already threatened overseas.

The real concerns of the United States and most *amici* are concerns of procedure. They think it is too easy for a patent holder to defeat, at summary judgment, challenges based on obviousness. They think this causes too many jury trials. To the extent those concerns are valid and not simply anecdotal, this Court should require district courts to hold hearings on section 103(a) challenges.

Like *Daubert* hearings, these hearings will weed out weak cases that should not go forward. Also, like *Daubert* hearings, these hearings will produce a thorough record and allow rigorous appellate review. The process has worked well in evidentiary law. It should work well in patent law. Such hearings will protect against lax patentability standards and will protect valid patent holders.

Respectfully Submitted,

WILLIAMS MULLEN

By: _____

Robert F. Redmond, Jr., Esq.
William R. Poynter
Williams Mullen
Two James Center
1021 East Cary Street
Richmond, Virginia 23219
Phone: (804) 783-6439
Fax: (804) 783-6465

846B

(37)

No. 04-1350

FILED
OCT 16 2006
OFFICE OF THE CLERK
SUPREME COURT, U.S.

IN THE

Supreme Court of the United States

KSR INTERNATIONAL CO.,
Petitioner,

v.

TELEFLEX INC. AND TECHNOLOGY HOLDING CO.,
Respondents.

On Writ of Certiorari to the United States Court of Appeals for the Federal Circuit

BRIEF OF WISCONSIN ALUMNI RESEARCH FOUNDATION, REGENTS OF THE UNIVERSITY OF CALIFORNIA, BOARD OF REGENTS OF THE UNIVERSITY OF TEXAS SYSTEM, WASHINGTON RESEARCH FOUNDATION, SCIENCE AND TECHNOLOGY CORPORATION @ UNM, RENSSELAER POLYTECHNIC INSTITUTE, AND RESEARCH CORPORATION TECHNOLOGIES, INC. AS *AMICI CURIAE* IN SUPPORT OF RESPONDENTS

COLE M. FAUVER
ROBINS, KAPLAN, MILLER & CIRESI L.L.P.
2800 LaSalle Plaza
800 LaSalle Avenue
Minneapolis, MN 55402
(612) 349-8500

RICHARD B. NETTLER *
ROBINS, KAPLAN, MILLER & CIRESI L.L.P.
1801 K Street, N.W.
Suite 1200
Washington, D.C. 20006
(202) 775-0725

* Counsel of Record

Counsel for *Amici Curiae*

WILSON-EPES PRINTING CO., INC. – (202) 789-0096 – WASHINGTON, D. C. 20001

TABLE OF CONTENTS

	Page
TABLE OF AUTHORITIES	ii
INTEREST OF THE *AMICI CURIAE*	1
SUMMARY OF THE ARGUMENT	7
ARGUMENT	8
I. LOWERING DEFENDANTS' BURDEN WOULD WEAKEN PATENTS AND DECREASE INVESTMENT IN NEW AND DEVELOPING TECHNOLOGY	8
II. THE PRESENT LAW ON OBVIOUSNESS PROPERLY FOLLOWS THE STATUTE AND SUPREME COURT PRECEDENT	13
III. THE PETITIONER'S POSITION WOULD ALTER THE STATUTORY BURDEN OF PROOF OF 35 U.S.C. § 282	18
CONCLUSION	20

TABLE OF AUTHORITIES

CASES	Page
Alza Corp. v. Mylan Laboratories, 80 U.S.P.Q.2d 1001 (Fed. Cir. 2006)	16
Application of Samour, 571 F. 2d 559 (C.C.P.A. 1978)	14
Custom Accessories v. Jeffrey-Allan Industries, 807 F.2d 955 (Fed. Cir. 1986)	15, 19, 20
Graham v. John Deere, 383 U.S. 1 (1966)	13, 14, 15, 19, 20
In re Fridolph, 134 F. 2d 414 (C.C.P.A. 1943)	13
In re Huston, 64 U.S.P.Q.2d 1801 (Fed. Cir. 2002)	16
In re Rouffet, 149 F.3d 1350 (Fed. Cir. 1998)	18
In re Thrift, 298 F. 3d 1357 (Fed. Cir. 2002)	16
Novo Nordisk A/S v. Becton Dickenson & Co., 304 F.3d 1216 (Fed. Cir. 2002)	17
Princeton Biochemicals, Inc. v. Beckman Coulter, Inc., 411 F.3d 1332 (Fed. Cir. 2005)	17
Radio Corporation of America v. Radio Engineering Laboratories, Inc., 293 U.S. 1 (1934)	18
Reeves Instrument Corp. v. Beckman Instruments, Inc., 444 F.2d 263 (9th Cir. 1971)	14, 15, 19
Ruiz v. A.B. Chance, 234 F.3d 654 (Fed. Cir. 2000)	18
Ruiz v. A.B. Chance, 357 F.3d 1270 (Fed. Cir. 2004)	15-18
Syntex (U.S.A.) LLC v. Apotex, Inc., 407 F.3d 1371 (Fed. Cir. 2005)	17

TABLE OF AUTHORITIES—Continued

Page

Webster Loom Co. v. Higgins, 105 U.S. 580 (1882) 10, 14

CONSTITUTION AND STATUTES

U.S. Const. art. I, § 8 13
35 U.S.C. § 103 ..... 7, 13-19
35 U.S.C. § 202 (c)(7)(D) 12
35 U.S.C. § 282 ..... 8, 18, 19, 20
35 U.S.C. §§ 200-212 ..... 1, 10
37 C.F.R. 401 1

OTHER AUTHORITIES

AUTM U.S. Licensing Survey, FY 2003 12
AUTM U.S. Licensing Survey, FY 2004 ..... 7, 11
D.A. Schkade & L.M. Kilbourne, *Expectation-Outcome Consistency and Hindsight Bias*, 49 Organizational Behav. & Hum. Decision Processes 108 (1991) 9
Howard Markey, *Why Not The Statute*, 65 J. Pat. Off. Soc. 331 (1983) 15
National Science Foundation, *Science and Engineering Indicators 2004* 1
National Science Foundation, *Science and Engineering Indicators 2006* 9, 11

INTEREST OF THE *AMICI CURIAE* [1]

Amici are universities, entities affiliated with universities, and entities involved in university technology management. *Amici* engage in and support scientific research, obtain patents on inventions arising from the research, license the technologies to companies for commercialization and then use the licensing income to underwrite further academic research.[2]

The academic sector drives research and innovation in the United States. By 2002, the sector accounted for an estimated 54% of the basic research conducted in this country.[3] The nonprofit research community carries out much of this work under the Patent and Trademark Law Amendments of 1980, commonly known as the Bayh-Dole Act ("the Act" or "Bayh-Dole"),[4] and its implementing regulations (37 C.F.R. 401). Congress passed the Act in 1980 to (a) nurture and spur research in the academic sector; and (b) promote university-industry collaborative relationships that would ensure that the fruits of university research reached and benefited the public.

---

[1] The parties have consented to the filing of this brief in global consents to the filing of *amicus* briefs in support of any party that have been lodged with the Clerk. Pursuant to Rule 37.6, *amici* state that no counsel for a party has written this brief in whole or in part and that no person or entity, other than these *amici* or their counsel, has made any monetary contributions to the preparation or submission of this brief.

[2] In this brief, *amici* employ the shorthand term "technology transfer" to refer to this transfer of research results and new technologies from universities to the commercial marketplace.

[3] National Science Foundation, *Science and Engineering Indicators 2004*, *available at* http://www.nsf.gov/statistics/seind04/c5/c5s1.htm. In 2002, academic institutions spent $33 billion on research and development, of which $19 billion came from the federal government and $6.7 billion from the academic institutions themselves. National Science Foundation, *Science and Engineering Indicators 2004*, *available at* http://www.nsf.gov/statistics/seind04/c5/c5h.htm.

[4] 35 U.S.C. §§ 200-212.

Amicus Wisconsin Alumni Research Foundation ("WARF") was founded in 1925 as a nonprofit entity to promote, encourage and aid scientific investigation at the University of Wisconsin-Madison ("UW-Madison"). One of WARF's first accomplishments was to patent a vitamin D discovery that eventually eliminated the childhood disease rickets worldwide. Since its founding, WARF has processed approximately 4,800 inventions created by UW-Madison faculty and staff, obtained 1,540 U.S. patents on these inventions, entered into over 1,390 license agreements with companies around the globe and returned $800 million in licensing fee income to UW-Madison to fund research programs and initiatives.

The Bayh-Dole Act has made it possible for WARF to make the contributions to the public good that it does today. In the middle to late 1960s, government agencies kept title to inventions that had been funded with federal money. As a consequence, invention disclosures to WARF had fallen to barely one per month, and what few disclosures there were had fallen in quality.[5] The situation improved somewhat when Institutional Patent Agreements ("IPAs") were negotiated with (what is now) the Department of Health and Human Services ("HHS") in 1968 and the National Science Foundation ("NSF") in 1973. These IPAs gave WARF (and other universities) the right to elect to take title to inventions made with funds from those two agencies.[6]

Since the enactment of Bayh-Dole, invention disclosures to WARF have mushroomed. Today, WARF (a) manages over 720 pending and 880 issued U.S. patents on UW-Madison technologies, as well as 1,920 foreign equivalents; (b) offers

---

[5] An "invention disclosure" is a document prepared by an inventor to describe the invention made for use in a potential patent application.

[6] The IPAs were evolutionary steps that led to the Bayh-Dole Act. In essence, the terms and provisions of the Bayh-Dole Act codified IPA provisions.

more than 3,800 technologies for licensing; (c) maintains more than 940 active commercial license agreements, as well as 460 academic licenses; (d) has over 160 license agreements with Wisconsin companies; and (e) holds equity in 40 UW-Madison spin-off companies. WARF's most important patents include the blood anticoagulant Warfarin; a coating process making pills easier to swallow; treatments for osteoporosis and cancer; magnetic resonance techniques; and a discovery known as the "Wisconsin Solution" that prolongs the use of transplant organs.

Amicus Regents of the University of California provides for technology transfer from ten campuses and five medical schools in the State, and from three national laboratories operated by the University of California system on behalf of the U.S. Department of Energy. Currently, there are more than 3,000 ongoing research projects supervised by 13,000 principal investigators.

In the last ten years alone, these efforts have led to three Nobel prizes and a long list of pioneering research discoveries in biochemistry, bioengineering, cell biology, disease procedures, developmental biology, endocrinology, genetics, immunology, neurobiology, oral biology, pharmacy and pharmacology. Those breakthrough discoveries include: the hepatitis B vaccine; a human growth hormone; a method to treat aneurysms by use of a catheter instead of opening the skull; cochlear implants to help the hearing impaired; a method for detecting feline immune deficiency virus; a method for detecting chromosome abnormalities; a laser system to enhance treatment of skin conditions; and a new atomic force microscope.

Amicus Board of Regents of the University of Texas System was founded in 1883. The University of Texas (UT) system is one of the largest systems of public higher education in the nation and the largest of six systems in Texas. Serving the broad academic and professional needs of a

diverse state, the UT System is composed of nine academic institutions and six health institutions, including four medical schools, two dental schools, and nine nursing schools. System-wide, the faculty includes nine Nobel laureates, 20 Pulitzer Prize winners, 37 members of the National Academy of Sciences, 50 members of the National Academy of Engineering, and 29 members of the Institute of Medicine.

As a direct result of the Bayh-Dole Act, the UT System makes significant contributions to the Texas economy through the discovery and commercialization of new technology, the attraction and growth of business, and the development of a well-educated workforce. Between 2001 and 2004, the University of Texas System was issued 422 patents, granted almost 500 licenses, and created 58 companies based on institutional research. UT System medical research has led to important discoveries such as kidney stone testing and medication, cancer cell detection, heart attack prevention and treatment, localized radiation therapy for cervical cancer, Hepatitis B medication, and pulmonary fibrosis. Discoveries from research at academic institutions include optical technology, improved heat transfer, point-of-care diagnostic testing, fuel cells that serve as artificial muscles, high quality pigments, diabetes and weight assessment for children, and biomedical engineering.

Amicus Washington Research Foundation ("WRF") was founded in 1981 to assist universities and other nonprofit research institutions in the State of Washington with commercialization of their technologies and to provide support, through gifts and grants, for scholarship and research. WRF is an independent private foundation whose operational revenue comes from retained funds from licensing and investing activities. WRF has made gifts and licensing disbursements to the University of Washington totaling more than $150 million.

WRF has benefited Washington State research institutions by licensing a variety of technologies to industry, including the basis for hepatitis B virus vaccine, blood clotting factors, recombinant insulin, and wireless technology supporting the "Bluetooth" protocol. The gifts from WRF have supported the creation of over 100 endowments for chairs, professsorships, research fellowships and graduate stipends in science, medicine and engineering. Educational programs created and supported by WRF include the Center for Technology Entrepreneurship (University of Washington Business School) and the Program for Technology Commercialization (University of Washington Bioengineering). WRF was a founding supporter of technology "gap" funding programs at the University of Washington, the Fred Hutchinson Cancer Research Center, and Washington State University.

Amicus Science & Technology Corporation @ UNM (STC) is a wholly-owned 501(c)(3) corporation of the University of New Mexico. The organization's mission is to support the University of New Mexico and its partners as the source for innovation management and commercial development. STC receives over 100 new invention and copyright disclosures a year and it is actively engaged in the commercialization of technologies through licensing to established companies and the formation of new start-up companies via its Lobo Venture Lab. Additional information about STC and its activities can be found at stc.unm.edu

Amicus Rensselaer Polytechnic Institute is the oldest technological university in the United States, founded in Troy, NY in 1824 for the purpose of instructing persons "in the application of science to the common purposes of life." It is comprised of five schools: Architecture, Engineering, Humanities and Social Sciences, Management, and Science.

Rensselaer Polytechnic Institute commercializes technologies through a combination of the licensing of its technologies as well as new company formation via an active

entrepreneurial educational and technological business incubator program. Within the past ten (10) years, Rensselaer has processed over 560 invention disclosures, which has resulted in over 90 issued U.S. patents. Rensselaer has processed over 65 license agreements, 45 of which are still active. Its rich history of technology transfer also includes graduates of over 200 companies from its Technology Incubator Program. Overall, Rensselaer's technology transfer efforts have led to significant economic growth in upstate New York and the transfer of important technologies to the public in such areas as nanotechnology, materials science, energy, information technology, medical and biotechnology, and experimental media.

Amicus Research Corporation Technologies, Inc. is an independent technology management company that has been involved in providing commercialization services to academia and other institutions since its founding in 1912. It has been pivotal to the success of many important pharmaceuticals, diagnostics, biotechnology products, and new materials and processes. Recent products include three in the cancer area: the widely used therapeutic compounds Cisplatin and Carboplatin and the PSA (Prostate Specific Antigen) test for diagnosing and monitoring prostate cancer.

The academic technology transfer work required to accomplish these extraordinary results is always arduous, sometimes grueling, and for most institutions, only modestly remunera tive. University of Michigan President Mary Sue Coleman recently explained why universities nonetheless engage in technology transfer:

> Many people are often confused about why we are interested in technology commercialization, in nurturing startup companies, and in facilitating more patents and license agreements. It is not about the promise of future revenues that might be generated from this activity. You heard me correctly. It is not about the money. . . . Tech-

> nology transfer must serve our core mission: sharing ideas and innovations in the service of society's well-being.[7]

Amici submit this brief to provide the Court with an academic sector perspective on the patent validity issues underlying this case. The brief focuses on why the Federal Circuit's present approach properly applies the statute, and on the risks that weakening patents would pose to the technology transfer capabilities of the university sector and the continued vitality of the Bayh-Dole Act.

SUMMARY OF THE ARGUMENT

Amici recognize the Petitioner's argument as an attempt to weaken patents and to make it easier to challenge a patent based on obviousness. The present "teaching, suggestion, or motivation to combine" test is an important and appropriate guard against using hindsight to find an invention was obvious. The test is further consistent with the express language of 35 U.S.C. § 103(a) and with the precedent of this Court.

Amici further state that lowering a defendant's burden of proving obviousness would have a direct and negative impact on research, development, and commercialization of products by universities and U.S. companies. Over the last 25 years, universities have greatly expanded investment in new technology and have dramatically increased real-world commercialization through licenses and partnerships with U.S. companies. These actions were spurred in large part by legislation enacted in 1980 that allowed universities to obtain patent rights in inventions developed with federal funding. Without the incentives that accompany a strong patent system, this

---

[7] AUTM U.S. Licensing Survey, FY 2004, available at http://www.autm.net/surveys/desp.surveyDetail.cfm?pid=28 (follow "Download PDF of abridged FY 2004 U.S. Survey Summary").

trend—and the beneficial research, commercialization and employment associated with it—could be at risk.

Amici urge the Court to maintain the current law on obviousness and to ensure that the law as applied by courts will keep the burden of proving invalidity on the party challenging the patent, as required by statute, 35 U.S.C. § 282, and to reject any attempt to shift the burden of proof to patent owners to show "synergy" or "extraordinary results" as urged by Petitioner.

ARGUMENT

I. LOWERING DEFENDANTS' BURDEN WOULD WEAKEN PATENTS AND DECREASE INVESTMENT IN NEW AND DEVELOPING TECHNOLOGY

The key to successful development and licensing of inventions generated within the university sector is a strong and viable patent system. The ability of the *amici curiae* to continue this publicly beneficial activity is dependent on whether they can obtain patents with an attached presumption of validity and can rely on the federal courts to protect their patents. Consequently, any changes which, through legislation or judicial interpretation, weaken the patent system will have a highly detrimental effect on the ability of the university sector to fulfill the premise and promise of the Bayh-Dole Act and therefore deprive the public of receiving the benefits of inventions and subsequent innovations which will improve the human condition.

Amici recognize the current law on obviousness, including the "motivation to combine" test, as vital to protecting the integrity of the patent system. The position urged by Petitioner in this case would dramatically weaken patents. It would invite potential infringers to disregard patents and refuse licenses, because a colorable obviousness defense

could always be created if the law presumed that a combination of known elements cannot be a patentable invention.

It is vital to avoid using hindsight to assess an invention. Impinging on that assessment is the fact that the number of scientific articles cataloged in the internationally recognized peer-reviewed set of Science and Engineering journals covered by the Science Citation Index (SCI) and Social Sciences Citation Index (SSCI) grew to nearly 700,000 in 2003 alone.[8] That repository of information, even absent other non-peer reviewed articles and publications, represents a huge library of information where, with the application of hindsight, uncombined elements of a given invention may be found with a diligent search. As a consequence, and without some effective guide, as the Court of Appeals has enunciated in the present case, one would be hard-pressed, perhaps even in most instances, not to find discrete elements of a disclosed and claimed invention with the application of hindsight based upon such disclosure.

There are many areas of technology where the results obtained from combining discrete elements are unpredictable, even by one skilled in the art. In that regard, one may be able to make a distinction between the mechanical and chemical or biochemical arts. But that is where the knowledge of one skilled in the particular art can provide a practical and measured approach to whether a patentable invention exists. Even that assessment is susceptible to distortion where hindsight is present during the evaluation. *See* D.A. Schkade & L.M. Kilbourne, *Expectation-Outcome Consistency and Hindsight Bias*, 49 Organizational Behav. & Hum. Decision Processes 108 (1991) (once an outcome is known, "it becomes difficult to accurately reconstruct a previous state of mind.") Indeed, as this Court recognized over 100 years ago, "[n]ow that [the

---

[8] National Science Foundation, *Science and Engineering Indicators 2006*, available at www.nsf.gov.

invention] has succeeded, it may seem very plain to any one that he could have done it as well." *Webster Loom Co. v. Higgins*, 105 U.S. 580, 591 (1882).

The Federal Circuit has recognized that the motivation standard applied in its analysis is inclusive of both explicit and implicit suggestions to combine prior art. This factor is extremely important because of the disparity in complexity and type of the technology to which the analysis must be applied. It fully supports a technology neutral position in application of the patent laws. The *amici curiae* believe that neutrality is an essential feature of a strong patent system, particularly in the face of many currently proposed reforms being driven by technology orientation.

Amici Curiae include leading research universities and related non-profit institutions in the United States that conduct and support research and development activities in connection with their primary educational mission. Some of the institutions have been transferring the results of the research conducted by them to the private sector through patenting and licensing for many years, even prior to the advent of significant federal funding for such research and development activities. The enactment of 35 U.S.C. §§ 200-212 (the Bayh-Dole Act) expanded the opportunity for the university and small business sectors to engage in technology transfer.

The seminal premise of the act changed the *ab initio* presumption of title to and, therefore, the ownership of, any invention made in whole or in part with federally-derived funds from the government to the respective non-profit entity or small business which had utilized such funds in the making of an invention. Under the Bayh-Dole Act the U.S. patent system was the designated vehicle for purposes of technology transfer.

Today there are some 300 universities which engage directly or indirectly through contractual arrangements in technology

transfer. This activity reflects the impact of the Bayh-Dole Act on academic technology transfer and that the federal government provided 62% of academic R&D expenditures in 2003 and which were estimated at $42 billion in 2004.[9] It is also significant that the bulk of the basic research (estimated at 54% in 2004) in the United States is conducted in the university sector. It is this research, which provides the basis for many new products and processes and sometimes the formation of whole new industries (witness the biotech industry), which heavily contributes to the United States maintaining its technological leadership in a global economy.

The Bayh-Dole Act is vital to transferring research results to the public and that ability and capability is the fundamental premise of the Bayh-Dole Act since the research is, for the most part, supported with taxpayer funds. Efforts by the university sector to validate that premise have exceeded the expectations of the influence of the Act. For example, 27,322 licenses/options were active in 2004 with the bulk of income derived from such contractual relationships being utilized in support of further research and development. In addition, since 1980, the year in which the Bayh-Dole Act was passed, 4,543 new companies have been formed based upon a license from an academic institution. Further, for the period from 1998 through 2004 a total of 3,114 products have been made commercially available from the licensing efforts of the university sector.[10]

As a practical matter, the greater need for the patent incentive lies primarily with universities, other non-profit organizations and small business. Technology transfer by universities and non-profits depends entirely on the underlying patent

---

[9] National Science Foundation, *Science and Engineering Indicators 2006*, available at www.nsf.gov.

[10] AUTM U.S. Licensing Survey, FY 2004, available at http://www.autm.net/surveys.

position. Given the fact that most university-generated inventions are embryonic in nature and require a great deal of development and often are well ahead of their time in a commercial sense, the need for exclusivity in licensing can be critical. Any uncertainty which accompanies a patent and its scope and validity makes it a candidate for rejection of licensing by the private sector. That, in turn, means that the likelihood of development to a commercial product or process is much diminished and that the public will be deprived of its benefits.

Moreover, a large segment of university licensing is with small companies and, in fact, the Bayh-Dole Act requires that preference be given to licensing of small business. 35 U.S.C. § 202 (c)(7)(D). It has been recognized by the National Science Foundation that small businesses contribute the greatest number of jobs to the U.S. economy and it has been estimated that university licensing has translated into 260,000 jobs and further, the licensing of inventions from universities, teaching hospitals, research institutes and patent management firms added approximately $40 billion to the domestic economy.[11]

The university sector's contribution to many facets of the U.S. and global economy, and to the enhancement of the human condition, is reliant upon a viable, sound and technology-neutral patent system. As such, the question before this Court is vital to the continued effectiveness of university technology transfer. Any changes that weaken the patent system will ultimately also weaken the ability of the university sector to transfer the fruits of its research endeavors to benefit and improve the human condition.

---

[11] AUTM U.S. Licensing Survey, FY 2003, available at http://www.autm.net/surveys.

II. THE PRESENT LAW ON OBVIOUSNESS PROPERLY FOLLOWS THE STATUTE AND SUPREME COURT PRECEDENT

The standards for patentable invention have been developing since the U.S. Constitution authorized Congress to provide for exclusive rights to inventors for their discoveries. U.S. Const. art. I, § 8. Courts and commentators have long recognized that most inventions are in fact new combinations of previously-known elements. Simply finding the elements of a patent claim separately in the prior art has never been sufficient to defeat patentability. Rather, courts focused on how the elements were combined. For example, the Court of Customs and Patent Appeals stated in 1943 that "[i]n considering more than one reference, or a reference alleged not to be in the art involved, the question always is: does such art suggest doing the thing which applicant has done?" *In re Fridolph*, 134 F.2d 414, 416 (C.C.P.A. 1943).

Congress first enacted legislation setting forth the non-obviousness requirement in 1952. 35 U.S.C. § 103. This Court has clarified that the 1952 Patent Act was not intended to change the general standards for patentability. It was intended to incorporate and codify the standards developed by the courts. *Graham v. John Deere*, 383 U.S. 1, 17 (1966). The express language of § 103 incorporated the concept of requiring more than individual elements. By focusing the analysis on "the subject matter as a whole," Congress required consideration of the claim elements taken together. By directing the analysis to the "time the invention was made," Congress precluded using hindsight to render an invention obvious. Thus, the question is not how the individual elements would be viewed by those skilled in the art after the fact, but whether the subject matter as a whole would have been obvious at the time of the invention.

This Court's decision in *Graham* identified factual inquiries basic to obviousness analysis: the scope and content

of the prior art, the differences between the prior art and the claims at issue, and the level of ordinary skill in the art. 383 U.S. at 17. The Court also recognized the difference between finding elements separately and finding the subject matter as a whole to be obvious. The Court discussed additional factual considerations as critical "to guard against slipping into the use of hindsight and to resist the temptation to read into the prior art the teachings of the invention in issue." *Id.* at 36. This Court recognized long ago that inventions might seem "plain" or "simple" after someone else invented them. *Webster Loom Co. v. Higgins*, 105 U.S. 580, 589-91 (1882) (rejecting the argument that a "mere aggregation" of old, well-known devices cannot be patentable).

With statutory and Supreme Court guidance, courts continued to scrutinize the prior art to see if it in fact suggested the subject matter as a whole. *Application of Samour*, 571 F.2d 559, 563 (C.C.P.A. 1978) (for obviousness rejections under § 103, "the teachings of references can be combined only if there is some suggestion or incentive to do so.") The courts looked beyond the existence of old elements, even if they operated in a claimed combination in the way they had before.

In *Reeves Instrument Corp. v. Beckman Instruments, Inc.*, 444 F.2d 263 (9th Cir. 1971), the Ninth Circuit Court of Appeals recognized that a litigation defendant will almost always be able to find the individual claim elements separately in the prior art. The court considered a challenge under § 103 to a patent relating to the problem of checking the operation of the numerous elements of an analog computer. The defendant first argued that "combination" patents are subject to special scrutiny, and that the patent in suit was invalid "because the claimed invention consists of old elements (amplifiers, potentiometers, switches etc.) which operate within the claimed combination in the same fashion as they have always operated in the prior art." 444 F.2d at 270.

This argument was squarely rejected by the court. In particular, the court carefully considered *Graham v. John Deere* and found that the defendant's argument "suggests an analytical approach to patentability which is directly contrary to the statutory language of § 103 which provides that the inquiry into patentability must be drawn to the 'subject matter as a whole' and not to the elements of a claimed combination and their individual novelty." *Id.* The *Reeves* court recognized that the argument, taken to its logical conclusion, would have the result of precluding patenting of "virtually every new mechanical or electrical device since the vast majority, if not all, involve the construction of some new device (or machine or combination) from old elements." *Id.* The court did not limit its reasoning to the electrical and mechanical arts but extended it also to the chemical arts, recognizing that "all chemical products are the result of combining known chemical elements." *Id.* at 270-271.

The Federal Circuit has followed the legal principles set out by this Court, by Congress, and by its predecessor court. It has continued to carefully apply the *Graham* factors in a way that follows the statutory directive to consider the invention as a whole, and to consider the state of the art at the time the invention was made. Because virtually all patents are combinations,[12] "[c]asting an invention as 'a combination of old elements' leads improperly to an analysis of the claimed invention by the parts, not by the whole." *Custom Accessories v. Jeffrey-Allan Industries*, 807 F.2d 955, 959 (Fed. Cir. 1986).

"Section 103 precludes this hindsight discounting of the value of new combinations by requiring assessment of the invention as a whole." *Ruiz v. A.B. Chance*, 357 F.3d 1270,

---

[12] Because 'every invention is formed of old elements,' a rule that such combinations are not patentable 'would destroy the system." Howard Markey, *Why Not The Statute*, 65 J. Pat. Off. Soc. 331 (1983).

1275 (Fed. Cir. 2004). As explained in *Ruiz*, "inventions are typically new combinations of existing principles or features. The "as a whole" instruction in title 35 prevents evaluation of the invention part by part." *Id.*

> Without this important requirement, an obviousness assessment might break an invention into its component parts (A+B+C), then find a prior art reference containing A, another containing B, and another containing C, and on that basis alone declare the invention obvious. This form of hindsight reasoning, using the invention as a roadmap to find it prior art components, would discount the value of combining various existing features or principles in a new way to achieve new results—often the very definition of invention.

357 F.3d at 1275.

In the obviousness analysis, the Federal Circuit has continued to look for a "motivation to combine" references, as its predecessor court had, and thereby avoid hindsight reconstruction. The "motivation to combine" test is not, however, as severe as Petitioner and supporting *amici* would have the Court believe. The Federal Circuit has not required that the suggestion or motivation be found in the express teachings of published materials. On the contrary, the Federal Circuit has applied the test in a flexible way that takes into account the particulars of each distinct factual setting. The motivation to combine may come from express statements in the prior art, but it also may come from the knowledge of one of ordinary skill in the art. *In re Thrift*, 298 F.3d 1357, 1363 (Fed. Cir. 2002), *In re Huston*, 64 U.S.P.Q.2d 1801, 1810 (Fed. Cir. 2002). Moreover, the suggestion or motivation may be found implicitly in the prior art, or even in the nature of the problem to be solved. *Alza Corp. v. Mylan Laboratories*, 80 U.S.P.Q.2d 1001 (Fed. Cir. 2006) (affirming judgment of invalidity under § 103 where one of skill in the art would

have been motivated to make the claimed combination, even without an express teaching or suggestion in the art.)

The current law thus takes into full account the statute's focus on a person having ordinary skill in the art. *See also Princeton Biochemicals, Inc. v. Beckman Coulter, Inc.*, 411 F.3d 1332, 1338 (Fed. Cir. 2005) (relying on undocumented knowledge of those skilled in the art and the nature of the problem to be solved to combine references); *Ruiz v. Chance*, 357 F.3d 1270, 1276 (stating that there is no "rule of law that an express, written motivation to combine" must exist to combine references, and identifying a motivation in the nature of the problem to be solved); *Syntex (U.S.A.) LLC v. Apotex, Inc.*, 407 F.3d 1371, 1381 (Fed. Cir. 2005) (relying on expert testimony about undocumented general knowledge in the art for the suggestion test analysis); *Novo Nordisk A/S v. Becton Dickenson & Co.*, 304 F.3d 1216 (Fed. Cir. 2002) (affirming jury verdict because there was substantial evidence that a motivation to combine was within the ordinary knowledge of one skilled in the art.)

The current law on obviousness is therefore consistent with the statute and with the laws of this Court. In contrast, the position urged by Petitioner threatens to contradict 35 U.S.C. § 103 because it would shift the focus *away* from "the invention as a whole," and it would invite hindsight reconstruction rather than assessing the invention at the time it was made. 35 U.S.C. § 103.

The current law on obviousness also serves another important function: to ensure that determinations of obviousness are based on evidence, and not merely on a judge or jury's unsupported sense of common knowledge. For example, the Federal Circuit has reversed the Board of Patent Appeals where the Board relied only on a high level of skill in the art as the motivation to combine, rather than specific knowledge or specific principles. "The Board did not, however, explain what specific understanding or technological principle within

the knowledge of one of ordinary skill in the art would have suggested the combination. Instead, the Board merely invoked the high level of skill in the field of art. If such a rote invocation could suffice to supply a motivation to combine, the more sophisticated scientific fields would rarely, if ever, experience a patentable technical advance." *In re Rouffet*, 149 F.3d 1350, 1357 (Fed. Cir. 1998).

Requiring some evidence of the motivation to combine teachings of multiple references also serves to provide an adequate record for appeal. In *Ruiz v. A.B. Chance*, 234 F.3d 654 (Fed. Cir. 2000), the Federal Circuit vacated the district court's obviousness ruling and remanded, directing the district court to more clearly present findings that supported the motivation to combine conclusion. The Federal Circuit later affirmed the district court's determination of obviousness, including the conclusion that the requisite motivation to combine was found "in the nature of the problem to be solved." 357 F.3d at 1275.

III. THE PETITIONER'S POSITION WOULD ALTER THE STATUTORY BURDEN OF PROOF OF 35 U.S.C. § 282

When Congress enacted 35 U.S.C. § 282 in 1952, it was careful to include both a presumption of validity for issued patents, and also to place the burden of proving invalidity on the party challenging it:

> The burden of establishing invalidity of a patent or any claim thereof shall rest on the party asserting such invalidity.

35 U.S.C. § 282. This statutory provision has been followed by courts and relied on by parties for over 50 years. Further, this Court has long held that invalidity must be proved by clear and convincing evidence. *Radio Corporation of America v. Radio Engineering Laboratories, Inc.*, 293 U.S. 1, 2-6 (1934). Despite this long-standing and fundamental point of

law, the Petitioner before this Court urges a change in the law that would dramatically alter the landscape and threaten to improperly shift the burden of showing validity to the patent owner.

In particular, Petitioner asks this court to eliminate the requirement that an obviousness challenge include some teaching, suggestion, or motivation to combine separate references in a way that leads to the claimed combination. In its place, Petitioner and supporting *amici* urge a "synergy of the elements" or "extraordinary result" test or, at a minimum, a presumption that a combination is suggested where its separate elements are known in the art and function in the claimed invention in the same way that they functioned in the prior art.

As explained above, this argument was rejected more than ten years before the Federal Circuit was formed as "an analytical approach to patentability which is directly contrary to the statutory language of § 103." *Reeves*, 444 F.2d at 270. The *Reeves* court evaluated the patent according to the *Graham* factors, and sustained its validity in light of the failure of others to solve the same problem, and on the defendant's failure to satisfy the statutory burden under § 282. *Id.* at 272, n. 6.

What the *Reeves* court recognized in 1971, what the *Custom Accessories* court recognized in 1986, is largely true today: most inventions are in fact combinations of known elements. A litigation defendant will be able to locate the separate elements in practically every case. If doing so meets its burden of proof, or even establishes a presumption of invalidity, then a patent owner will have the burden of proving the additional facts to sustain the validity of its issued patent in virtually every case. Requiring the patent owner to prove "synergy" or "extraordinary results" runs directly contrary to the burden of proof set forth in § 282.

It has never been the patent owner's affirmative burden to establish 'objective evidence' of nonobviousness in the first instance. The absence of such objective evidence does not require a holding of obviousness because such evidence is not an affirmative requirement for patentability under the statute. *Custom Accessories*, 807 F.2d at 960-61 (vacating obviousness finding where "the district court may have incorrectly placed the burden on the patentee to establish validity," and remanding for more detailed *Graham* findings).

The present law on obviousness ensures that the burden remains as statutorily prescribed by asking that the defendant produce some evidence of a teaching, motivation, or suggestion to combine references. As explained above, the suggestion need not be an express publication but can come from the knowledge of those skilled in the art or from the nature of the problem to be solved. But there must be some basis to combine references, or some evidence of what the knowledge or problem is. To rule otherwise would suddenly impose a new burden of proof on the owners of hundreds of thousands of issued patents, contrary to § 282. Further, doing so would radically decrease the incentive to invent and to invest in invention.

CONCLUSION

Amici believe the present "suggestion" test for obviousness provides important safeguards against hindsight and should not be dismantled.

Respectfully submitted,

COLE M. FAUVER
ROBINS, KAPLAN, MILLER
& CIRESI L.L.P.
2800 LaSalle Plaza
800 LaSalle Avenue
Minneapolis, MN 55402
(612) 349-8500

RICHARD B. NETTLER *
ROBINS, KAPLAN, MILLER
& CIRESI L.L.P.
1801 K Street, N.W.
Suite 1200
Washington, D.C. 20006
(202) 775-0725

* Counsel of Record

Counsel for *Amici Curiae*